COMMERCE BUSINESS PARK
BUILDING #1
CITY OF FRANKLIN, JOHNSON COUNTY, INDIANA
CONSTRUCTION PLANS

PREPARED FOR:
CTC04, LLC
2530 BLUFF ROAD
INDIANAPOLIS, IN 46225
(317) 782-8300

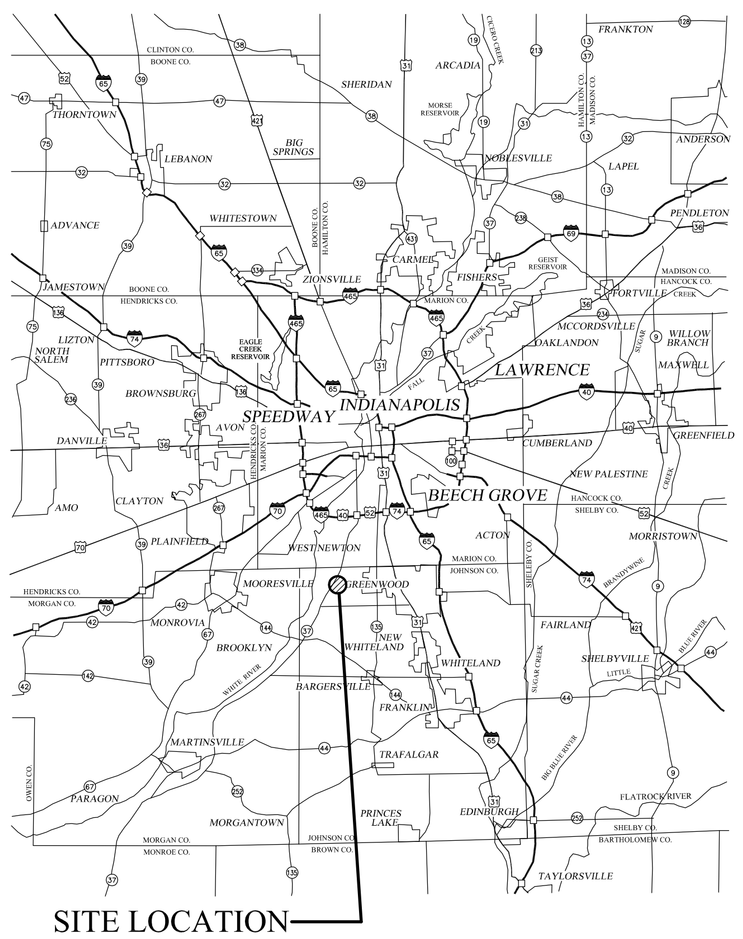

AREA MAP

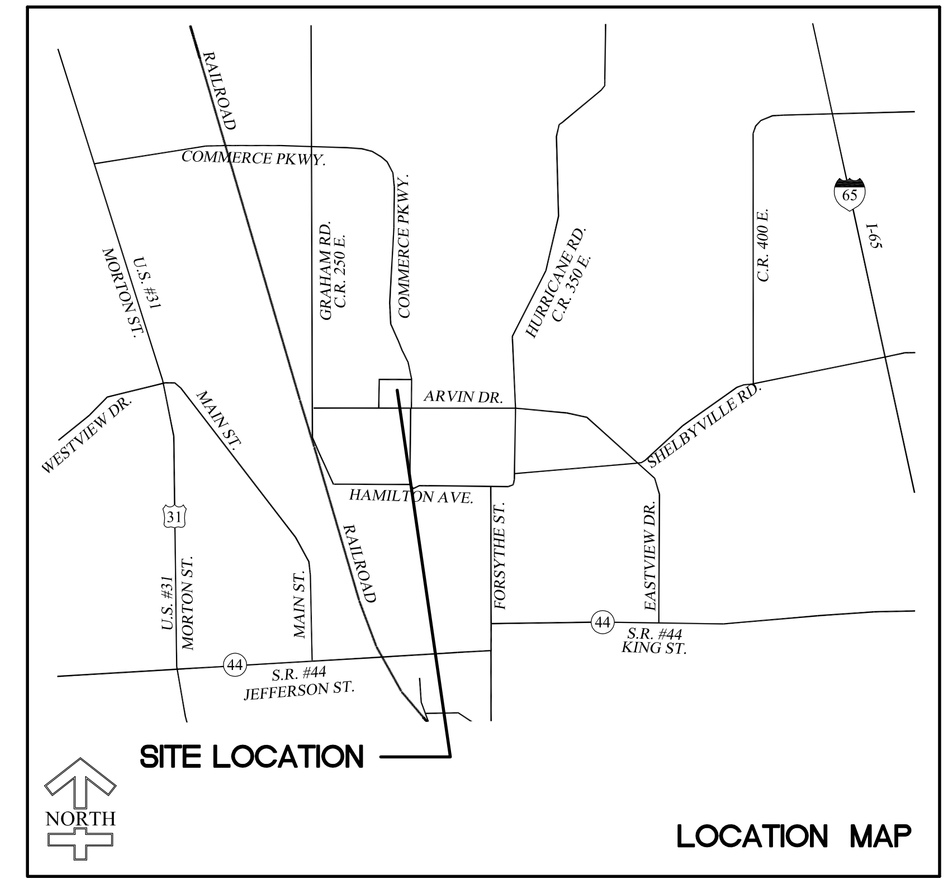

LOCATION MAP

SITE ADDRESS: 1400 COMMERCE PARKWAY
FRANKLIN, IN 46131

ISSUE NO.	DATE	DESCRIPTION
1	7/18/13	SUBMIT FOR GOVERNMENTAL AGENCY APPROVALS

INDEX OF DRAWINGS

SHEET NO.	DESCRIPTION
1	TITLE SHEET
2	EXISTING SITE PLAN
3	GEOMETRIC PLAN
4	GRADING PLAN
5	EROSION CONTROL PLAN
6	UTILITY PLAN
7	LANDSCAPE PLAN
8	EROSION CONTROL DETAILS
9	SITE DETAILS
10	SPECIFICATIONS

DATES:

EST. PROPOSED START DATE: SUMMER 2013
EST. COMPLETION DATE: FALL 2013

USE:

PROPOSED USE: INDUSTRIAL GENERAL
EXISTING ZONING: IG

UTILITY CONTACT INFORMATION

SANITARY SEWERS
FRANKLIN PUBLIC WORKS
796 SOUTH STATE ST.
FRANKLIN, IN 46131
PHONE #: (317) 736-3640
CONTACT: RICK LITTLETON
DPWSUPERINTENDENT@FRANKLIN-IN.GOV

TELEPHONE
CENTURYLINK
1147 NORTH MORTON STREET
FRANKLIN, IN 46131
PHONE #: (317) 736-4863
CONTACT: LARRY TALBOT
LARRY.A.TALBOT@EMBARQ.COM

WATER
INDIANA - AMERICAN WATER
110 S. PARK DR.
GREENWOOD, IN 46143
PHONE #: (317) 881-0270
CONTACT: TROY BRYANT
JAMES.BYRANT@AMWATER.COM

ELECTRIC
DUKE ENERGY
2515 N. MORTON ST.
FRANKLIN, IN 46131
PHONE #: (317) 736-2019
CONTACT: JERRY TROXEL
JERRY.TROXEL@DUKE-ENERGY.COM

GAS
VECTREN
600 INDUSTRIAL DRIVE
FRANKLIN, IN 46131
PHONE #: (317) 736-2989
CONTACT: DAVID SHERRY
DSHERRY@VECTREN.COM

CABLE
COMCAST
1600 WEST VERNAL PIKE
BLOOMINGTON IN 47404
PHONE #: (812) 355-7822
CONTACT: SCOTT TEMPLETON
SCOTT_TEMPLETON@CABLE.COMCAST.COM

LEGAL DESCRIPTION

A part of the Southeast Quarter of Section II, Township 12 North, Range 4 East of the Second Principal Meridian, Johnson County, Indiana, described as follows:

Commencing at the Southwest corner of said Quarter Section; thence North 00 degrees 06 minutes 08 seconds West (previous survey bearing) along the West line of said Quarter Section 50.00 feet; thence North 89 degrees 13 minutes 22 seconds East 1240.00 feet to the Point of Beginning of the described tract; thence North 00 degrees 00 minutes 00 seconds West 513.37 feet; thence North 90 degrees 00 minutes 00 seconds East 477.92 feet to a point on the West right-of-way line of a roadway easement; the next two (2) courses follow last said West right-of-way line; thence Southeasterly on and along a curve to the right with a radius of 770.00 feet, an arc distance of 261.63 feet and a chord bearing and distance of South 09 degrees 44 minutes 03 seconds East 260.38 feet; thence South 0 degrees 00 minutes 00 seconds East 249.66 feet; thence South 89 degrees 13 minutes 22 seconds West 522.12 feet to the Point of Beginning, containing 6.025 acres, mor or less, subject to all pertinent easements, rights-of-way and restrictions.

Parcel #: 5100 11 01 007/00

Subject to any and all easements, agreements and restrictions of record.

PROPERTY LINES, DIMENSIONS AND EASEMENTS ARE PER THE ALTA/ACSM LAND TITLE SURVEY PREPARED BY BANNING ENGINEERING, DATED SEPTEMBER 22, 2011, RECORDED AS INSTRUMENT NUMBER 2011-025705 FOR THE JOHNSON COUNTY DEVELOPMENT CORP.

TOPOGRAPHICAL INFORMATION, INCLUDING UTILITIES, ARE PER THE TOPOGRAPHIC SURVEY PREPARED BY BANNING ENGINEERING FOR THE JOHNSON COUNTY DEVELOPMENT CORP.

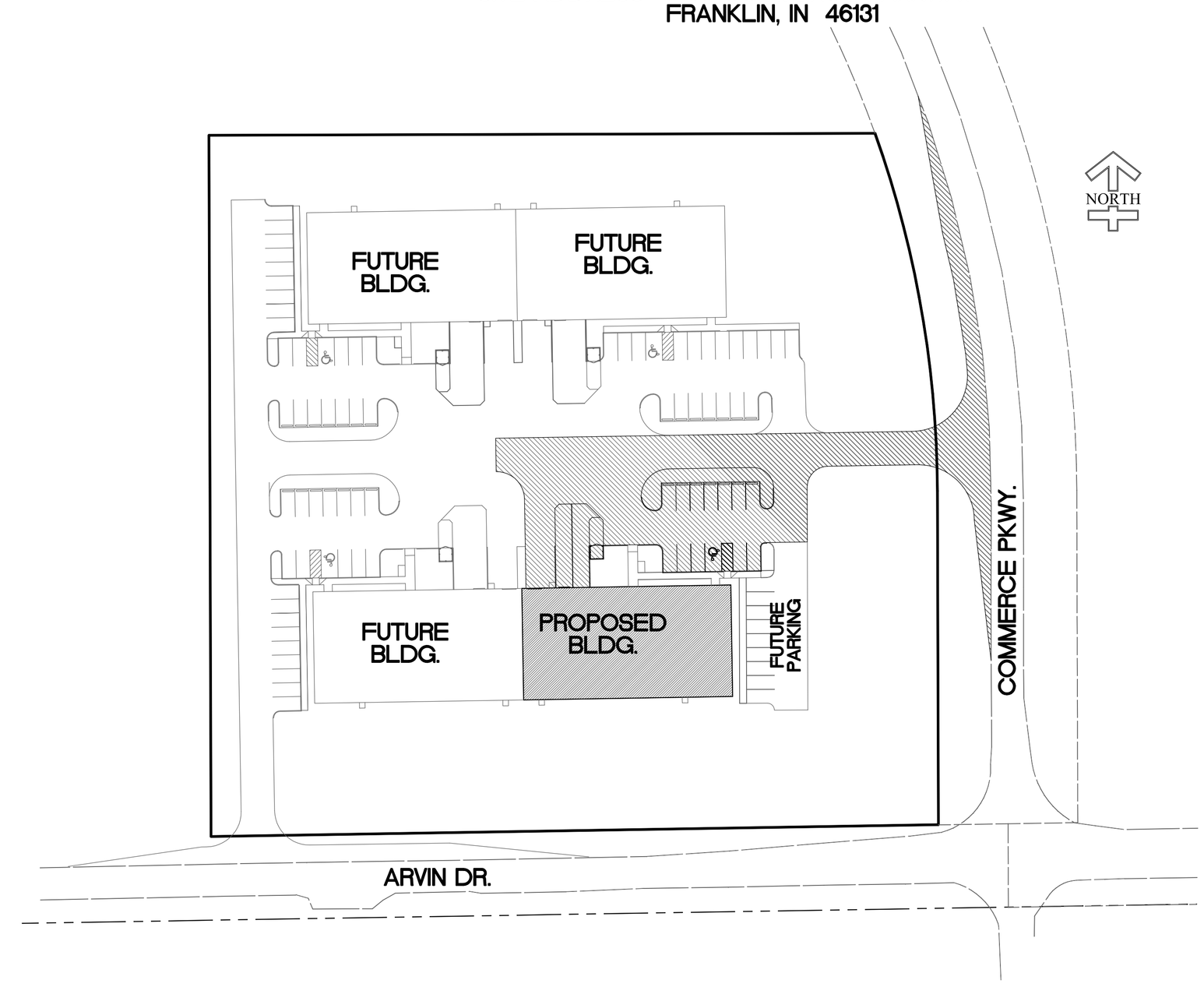

CERTIFIED BY:

Jeffery K. Smith 7/18/13

JEFFERY K. SMITH
REGISTERED ENGINEER NO. 19419
STATE OF INDIANA

JEFFERY K. SMITH
REGISTERED
No. 19419
STATE OF INDIANA
PROFESSIONAL ENGINEER

PREPARED BY:
PROJECTS plus
GREENWOOD SURVEYING COMPANY
CIVIL ENGINEERING - LAND SURVEYING
LAND PLANNING - CONSTRUCTION MANAGEMENT
2555 Fairview Place Suite A - Greenwood, Indiana 46142
(317)-882-5003

SHEET 1 OF 10
JOB #13011

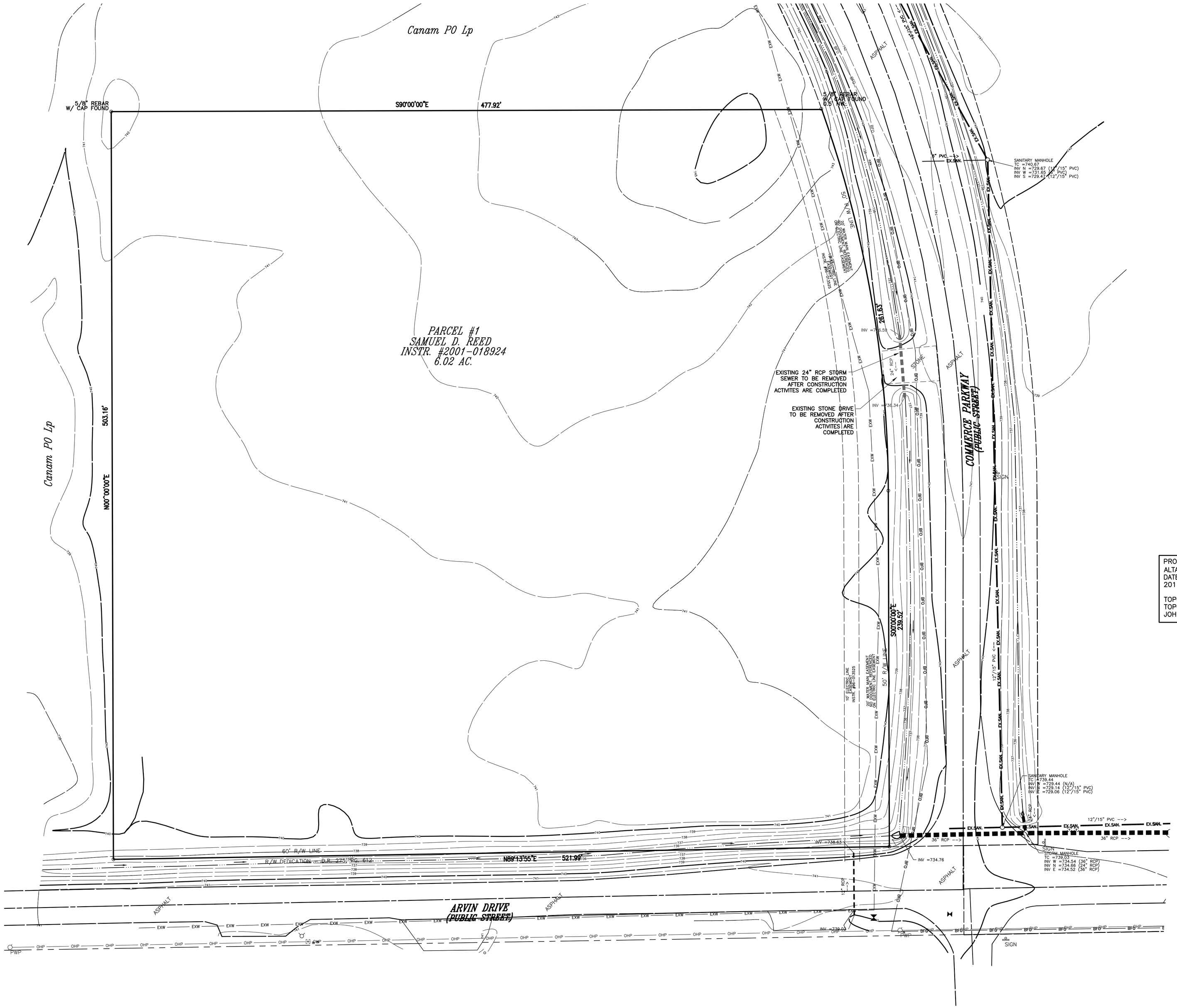

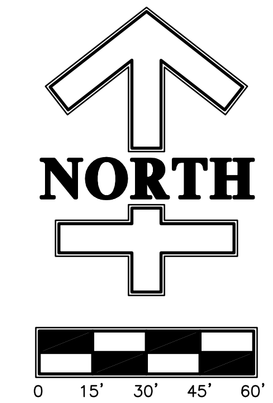

LEGEND :

- EX.SAN. — EXISTING SANITARY SEWER W/ MANHOLE
- EXISTING STORM SEWER W/ END SECTION, DITCH INLET AND CURB INLET
- EX.8"W — EXISTING WATER LINE W/ FIRE HYDRANT
- OHP — EXISTING OVERHEAD POWERLINE
- BFO — EXISTING BURIED FIBER OPTICS LINE
- PWP — EXISTING UTILITY POLE
- SIGN — EXISTING TRAFFIC SIGN
- 752 — EXISTING CONTOUR LINE

SITE BENCHMARK:

1. TOP OF SANITARY SEWER CASTING, LOCATED AT THE NORTHEAST CORNER OF THE INTERSECTION OF ARVIN ROAD AND COMMERCE PARKWAY (ELEV. - 729.44)

PROPERTY LINES, DIMENSIONS AND EASEMENTS ARE PER THE ALTA/ACSM LAND TITLE SURVEY PREPARED BY BANNING ENGINEERING, DATED SEPTEMBER 22, 2011, RECORDED AS INSTRUMENT NUMBER 2011-025705 FOR THE JOHNSON COUNTY DEVELOPMENT CORP.

TOPOGRAPHICAL INFORMATION, INCLUDING UTILITIES, ARE PER THE TOPOGRAPHIC SURVEY PREPARED BY BANNING ENGINEERING FOR THE JOHNSON COUNTY DEVELOPMENT CORP.

Know what's below.
Call before you dig.
"IT'S THE LAW"
CALL 2 WORKING DAYS BEFORE YOU DIG

THIS DRAWING/COMPUTER FILE IS THE PROPERTY OF PROJECTS PLUS ANY REPRODUCTION OR REUSE OF THIS DOCUMENT WITHOUT WRITTEN PERMISSION FROM PROJECTS PLUS IS PROHIBITED. ANY PERSON OR ENTITY USING THIS DOCUMENT FOR ANY PURPOSE OTHER THAN THE PROJECT FOR WHICH IT WAS ORIGINALLY INTENDED, WITH OR WITHOUT PERMISSION FROM PROJECTS PLUS, BY ITS USE AGREES TO INDEMNIFY AND HOLD HARMLESS PROJECTS PLUS FROM ANY LOSS, INCLUDING BUT NOT LIMITED TO ATTORNEY'S FEES, OCCURRING FROM THEIR USE.

SYMBOL	REVISION	DATE

SCALE 1"=30' | DRAWN JPH | CHECKED JKS | CERTIFIED JKS

PROJECT: COMMERCE BUSINESS PARK BUILDING #1
CITY OF FRANKLIN, JOHNSON COUNTY, INDIANA

TITLE: EXISTING SITE PLAN

PROJECTS plus
GREENWOOD SURVEYING COMPANY
CIVIL ENGINEERING - LAND SURVEYING
LAND PLANNING CONSTRUCTION MANAGEMENT
2555 Fairview Place Suite A - Greenwood, Indiana 46142
(317)-882-5003

SEAL
JEFFERY K. SMITH
REGISTERED No. 19419 STATE OF INDIANA
PROFESSIONAL ENGINEER
7/18/13

JOB NUMBER 13011

SHEET 2 OF 10 SHEETS

DATE JULY 18, 2013

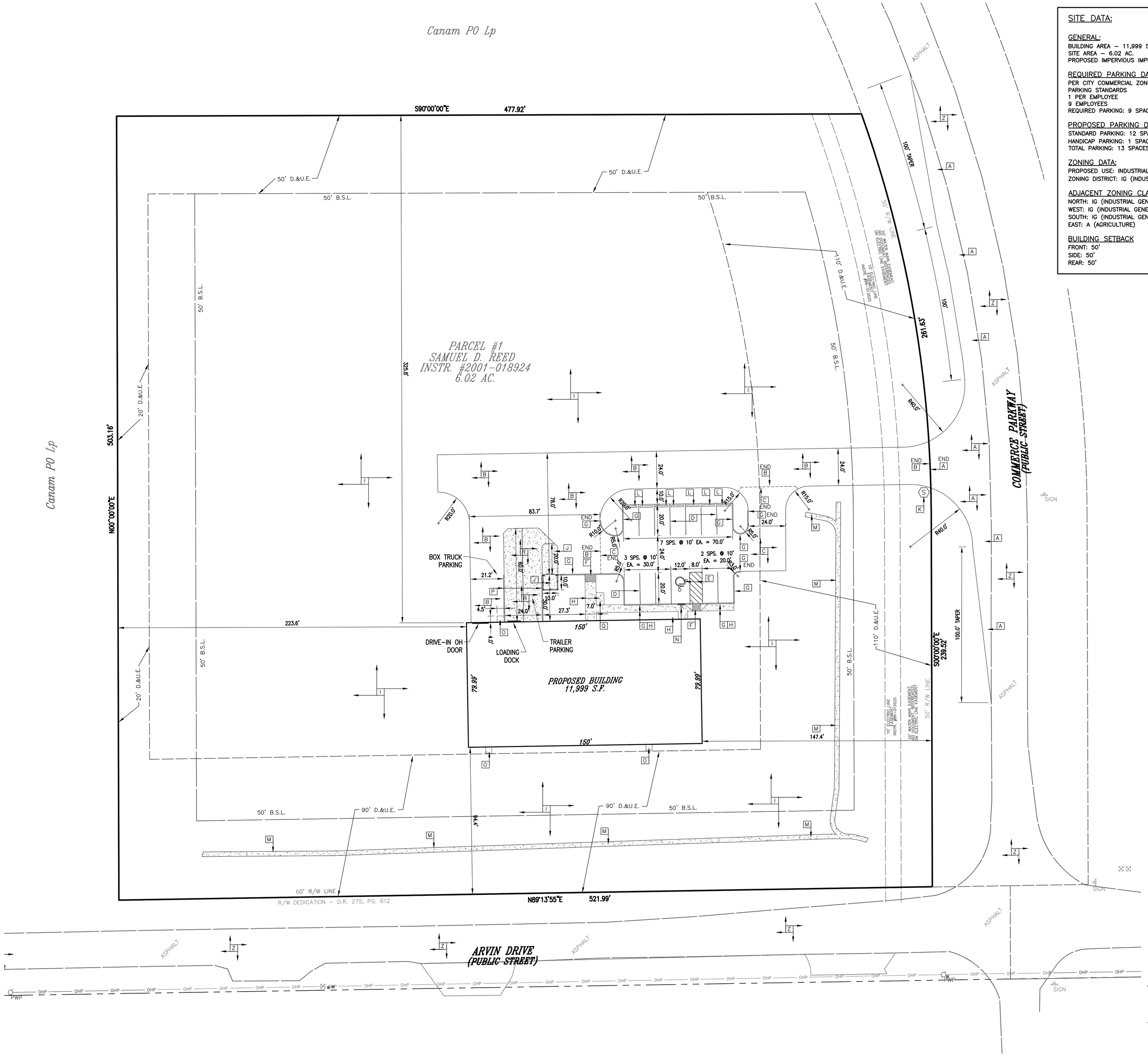

SITE DATA:

GENERAL:
BUILDING AREA – 11,999 S.F.
SITE AREA – 6.02 AC.
PROPOSED IMPERVIOUS IMPROVEMENTS – 0.90 AC.

REQUIRED PARKING DATA:
PER CITY COMMERCIAL ZONING ORDINANCE SEC. 7.10
PARKING STANDARDS
1 PER EMPLOYEE
9 EMPLOYEES
REQUIRED PARKING: 9 SPACES

PROPOSED PARKING DATE:
STANDARD PARKING: 12 SPACES (10'x20')
HANDICAP PARKING: 1 SPACE (12'x20')
TOTAL PARKING: 13 SPACES

ZONING DATA:
PROPOSED USE: INDUSTRIAL
ZONING DISTRICT: IG (INDUSTRIAL GENERAL)

ADJACENT ZONING CLASSIFICATIONS:
NORTH: IG (INDUSTRIAL GENERAL)
WEST: IG (INDUSTRIAL GENERAL)
SOUTH: IG (INDUSTRIAL GENERAL)
EAST: A (AGRICULTURE)

BUILDING SETBACK
FRONT: 50'
SIDE: 50'
REAR: 50'

NORTH

0 15' 30' 45' 60'

GENERAL NOTES:

1. CONTRACTOR SHALL RECOGNIZE RESPECTIVE WORK AND RESPONSIBILITY TO VERIFY LOCATION, SIZE, AND ELEVATION OF EXISTING UTILITIES, STRUCTURES, PIPES, PAVEMENTS, ETC. AS RELATED TO THEIR WORK. NOTIFY ARCHITECT/ENGINEER OF ANY CONFLICT AND/OR DISCREPANCIES IN THE CONSTRUCTION DOCUMENTS.
2. IT IS THE CONTRACTOR'S RESPONSIBILITY TO ACQUAINT HIMSELF WITH SUBSOIL CONDITIONS.
3. THE PLANS SHOW THE LOCATION OF ALL KNOWN UTILITIES LOCATED WITHIN THE LIMITS OF THE CONTRACT ACCORDING TO INFORMATION PROVIDED BY THE VARIOUS UTILITY COMPANIES. PREVIOUS CONSTRUCTION PLANS AND AS EVIDENCED BY OBSERVATION OF ABOVE GROUND CONDITIONS BY THE SURVEYOR. THE ACCURACY OF THIS INFORMATION IS NOT GUARANTEED.
4. CONTRACTORS SHALL CONSULT ARCHITECTURAL, PLUMBING AND ELECTRICAL PLANS FOR: INVERT ELEVATIONS AND EXACT LOCATION OF DOWNSPOUTS, WATER LINES GAS LINES, TRANSFORMER'S PAD OR POLE, AND BUILDING DIMENSIONS.
5. ALL PAVEMENT PATCHING DUE TO UTILITIES INSTALLATION; CONSTRUCTION OF CURBS, ETC., OR DAMAGE TO EXISTING PAVEMENT DURING CONSTRUCTION SHALL BE PATCHED WITH A PAVEMENT SECTION WHICH MEETS OR EXCEEDS JOHNSON COUNTY STANDARDS AS APPROVED BY THE ENGINEERING DEPARTMENT.
6. ALL GRASS AND/OR SHRUBBERY DISTURBED BY NEW CONSTRUCTION SHALL BE RESTORED TO ORIGINAL OR BETTER CONDITION.
7. ALL EXISTING MANHOLE AND CATCH BASIN GRATES, WATER OR GAS VALVES SHALL BE ADJUSTED TO NEW FINISH GRADE ELEVATION
8. ALL PIPE LENGTHS SHOWN ON DRAWINGS ARE FOR HYDRAULIC CALCULATION PURPOSES ONLY. IT IS THE RESPONSIBILITY OF THE CONTRACTOR TO DETERMINE EXACT LENGTHS REQUIRED FOR ACTUAL INSTALLATION.
9. CONSTRUCTION OF ALL SEWER LINES AND STRUCTURES SHALL BE IN ACCORDANCE WITH LOCAL AND STATE CODE, RULES AND REGULATIONS
10. WHERE WATER LINES AND SEWERS CROSS AND THE WATER LINE CANNOT BE PLACED ABOVE OR BELOW THE SEWER WITH A MINIMUM OF 18" VERTICAL CLEARANCE. THE SEWER MUST BE CONSTRUCTED OF WATER WORKS GRADE DUCTILE IRON PIPE WITH MECHANICAL JOINTS OR PLASTIC (SDR 26) SEWER PIPE WITH GASKETED, COMPRESSION–TYPE JOINTS WITHIN 10' OF THE WATER LINE.
11. WHERE WATER LINES AND SEWERS RUN PARALLEL AND A MINIMUM SEPARATION DISTANCE OF 10' CANNOT BE MAINTAINED, THE SEWER MUST BE CONSTRUCTED OF WATER WORKS GRADE DUCTILE IRON PIPE WITH MECHANICAL JOINTS OR PLASTIC (SDR 26) SEWER PIPE WITH GASKETED, COMPRESSION–TYPE JOINTS.
12. ANY FIELD TILES ENCOUNTERED DURING THE COURSE OF CONSTRUCTION SHALL BE PERPETUATED IN COMPLIANCE WITH STATE AND LOCAL LAWS AND REGULATIONS.
13. ALL STORM CASTINGS ARE TO BE OF THE "ENVIRONMENTAL" TYPE AND EMBOSSED WITH THE APPROPRIATE LANGUAGE AND SYMBOLS. USE NPDES PHASE II COMPLIANT CASTINGS (DUMP NO WASTE; DRAINS TO RIVER) WHERE AVAILABLE
14. DIMENSIONS TO FACE OF CURB.
15. CONTRACTOR SHALL REPAIR OR REPLACE ANY DAMAGED CONCRETE SIDEWALK OR CONCRETE CURB DISTRIBUTED BY CONSTRUCTION.

NOTICES AND PERMITS

1. THE CONTRACTORS SHALL BE RESPONSIBLE FOR OBTAINING OR VERIFYING THAT ALL PERMITS AND APPROVALS ARE OBTAINED FROM THE RESPECTIVE CITY, COUNTY OR STATE AGENCIES PRIOR TO STARTING ANY CONSTRUCTION.
2. IT SHALL BE THE CONTRACTOR'S RESPONSIBILITY TO DETERMINE THE EXACT LOCATION OF ALL UTILITIES IN THE VICINITY OF THE CONSTRUCTION AREA PRIOR TO STARTING ANY CONSTRUCTION.
3. IT SHALL BE THE CONTRACTOR'S RESPONSIBILITY FOR NOTIFICATION AND COORDINATION OF ALL CONSTRUCTION WITH THE RESPECTIVE UTILITY COMPANIES PRIOR TO STARTING ANY CONSTRUCTION.

PROPERTY LINES, DIMENSIONS AND EASEMENTS ARE PER THE ALTA/ACSM LAND TITLE SURVEY PREPARED BY BANNING ENGINEERING, DATED SEPTEMBER 22, 2011, RECORDED AS INSTRUMENT NUMBER 2011–025705 FOR THE JOHNSON COUNTY DEVELOPMENT CORP.

TOPOGRAPHICAL INFORMATION, INCLUDING UTILITIES, ARE PER THE TOPOGRAPHIC SURVEY PREPARED BY BANNING ENGINEERING FOR THE JOHNSON COUNTY DEVELOPMENT CORP.

PROPOSED KEYNOTES:

- A RIGHT–OF–WAY PAVEMENT SECTION (7" BITUMINOUS OVER 8" STONE BASE)
- B HEAVY DUTY INTERNAL PARKING PAVEMENT SECTION (4" BITUMINOUS OVER 8" STONE BASE)
- C INTERNAL PARKING PAVEMENT SECTION (3" BITUMINOUS OVER 6" STONE BASE)
- D 4" WHITE PAVEMENT STRIPING
- E ADA BLUE HANDICAP PARKING STRIPING
- F HANDICAP ACCESS RAMP
- G 6" EXTRUDED CONCRETE CURB
- H 4" CONCRETE SIDEWALK
- I LANDSCAPING AND LAWN
- J CONCRETE DUMPSTER PAD W/ APRON AND 6' TREATED WOOD ENCLOSURE
- K STOP SIGN
- L CONCRETE PARKING BUMPER
- M CONCRETE PAVED SWALE
- N HANDICAP PARKING SIGN
- O CONC. STOOP, PER ARCHITECTURAL PLAN
- P CONC. RETAINING WALL
- Q BICYCLE RACK, FOR A MINIMUM OF TWO BICYCLES
- R HEAVY DUTY TRUCK DOCK PARKING SECTION (8" CONCRETE OVER 4" STONE W/ WWF)

EXISTING KEYNOTES:

- Z EXISTING ASPHALT PAVEMENT (PROTECT)

LEGEND :

S.S.,D.&U.E.	SANITARY SEWER, DRAINAGE AND UTILITY EASEMENT
B.S.L.	BUILDING SETBACK LINE
R/W	RIGHT–OF–WAY
OHP	EXISTING OVERHEAD POWERLINE
PWP	EXISTING UTILITY POLE
	EXISTING TRAFFIC SIGN
S	PROPOSED STOP SIGN

811
Know what's below.
Call before you dig.
"IT'S THE LAW"
CALL 2 WORKING DAYS BEFORE YOU DIG

THIS DRAWING/COMPUTER FILE IS THE PROPERTY OF PROJECTS PLUS ANY REPRODUCTION OR REUSE OF THIS DOCUMENT WITHOUT WRITTEN PERMISSION FROM PROJECTS PLUS IS PROHIBITED. ANY PERSON OR ENTITY USING THIS DOCUMENT FOR ANY PURPOSE OTHER THAN THE PROJECT FOR WHICH IT WAS ORIGINALLY INTENDED, WITH OR WITHOUT PERMISSION FROM PROJECTS PLUS, BY ITS USE AGREES TO INDEMNIFY AND HOLD HARMLESS PROJECTS PLUS FROM ANY LOSS, INCLUDING BUT NOT LIMITED TO ATTORNEY'S FEES, OCCURRING FROM THEIR USE.

SYMBOL	REVISION	DATE

SCALE 1"=30'
DRAWN JPH
CHECKED JKS
CERTIFIED JKS

PROJECT
COMMERCE BUSINESS PARK
BUILDING #1
CITY OF FRANKLIN, JOHNSON COUNTY, INDIANA

TITLE
GEOMETRIC PLAN

PROJECTS plus
GREENWOOD SURVEYING COMPANY
CIVIL ENGINEERING – LAND SURVEYING
LAND PLANNING – CONSTRUCTION MANAGEMENT
2555 Fairview Place Suite A – Greenwood, Indiana 46142
(317)–882–5003

SEAL
JEFFERY K. SMITH
REGISTERED
No. 19419
STATE OF INDIANA
PROFESSIONAL ENGINEER
7/18/13

JOB NUMBER
13011

SHEET
3
OF 10 SHEETS

DATE
JULY 18, 2013

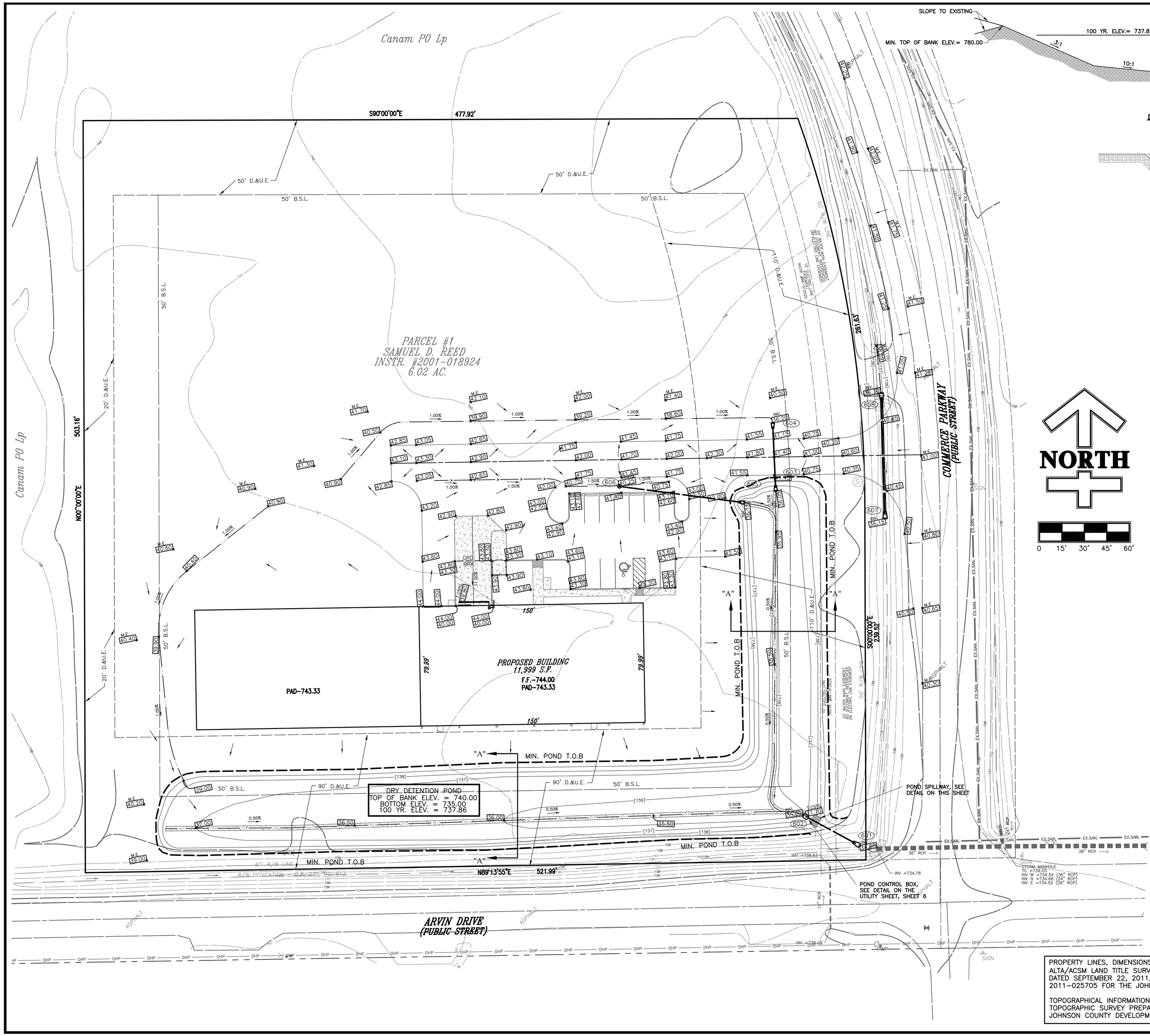

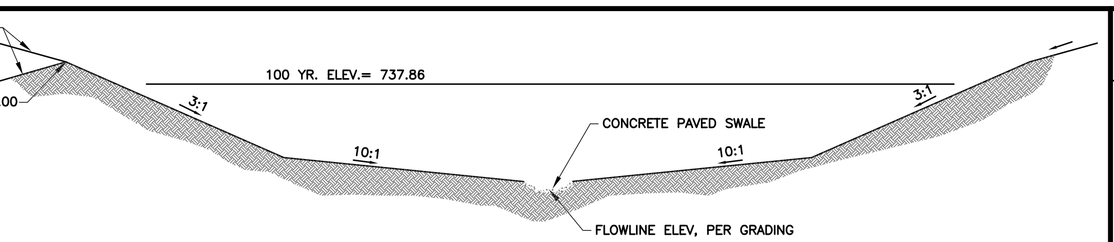

DRY DETENTION POND SECTION A–A

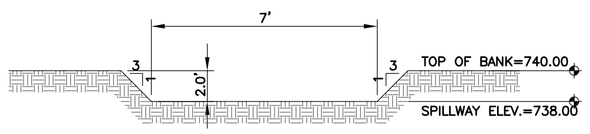

POND EMERGENCY SPILLWAY

GENERAL NOTES:

1. CONTRACTOR SHALL RECOGNIZE RESPECTIVE WORK AND RESPONSIBILITY TO VERIFY LOCATION, SIZE, AND ELEVATION OF EXISTING UTILITIES, STRUCTURES, PIPES, PAVEMENTS, ETC. AS RELATED TO THEIR WORK. NOTIFY ARCHITECT/ENGINEER OF ANY CONFLICT AND/OR DISCREPANCIES IN THE CONSTRUCTION DOCUMENTS.
2. IT IS THE CONTRACTOR'S RESPONSIBILITY TO ACQUAINT HIMSELF WITH SUBSOIL CONDITIONS.
3. THE PLANS SHOW THE LOCATION OF ALL KNOWN UTILITIES LOCATED WITHIN THE LIMITS OF THE CONTRACT ACCORDING TO INFORMATION PROVIDED BY THE VARIOUS UTILITY COMPANIES, PREVIOUS CONSTRUCTION PLANS AND AS EVIDENCED BY OBSERVATION OF ABOVE GROUND CONDITIONS BY THE SURVEYOR. THE ACCURACY OF THIS INFORMATION IS NOT GUARANTEED.
4. CONTRACTORS SHALL CONSULT ARCHITECTURAL, PLUMBING AND ELECTRICAL PLANS FOR: INVERT ELEVATIONS AND EXACT LOCATION OF DOWNSPOUTS, WATER LINES GAS LINES, TRANSFORMER'S PAD OR POLE, AND BUILDING DIMENSIONS.
5. ALL PAVEMENT PATCHING DUE TO UTILITIES INSTALLATION; CONSTRUCTION OF CURBS, ETC., OR DAMAGE TO EXISTING PAVEMENT DURING CONSTRUCTION SHALL BE PATCHED WITH A PAVEMENT SECTION WHICH MEETS OR EXCEEDS JOHNSON COUNTY STANDARDS AS APPROVED BY THE ENGINEERING DEPARTMENT.
6. ALL GRASS AND/OR SHRUBBERY DISTURBED BY NEW CONSTRUCTION SHALL BE RESTORED TO ORIGINAL OR BETTER CONDITION.
7. ALL EXISTING MANHOLE AND CATCH BASIN GRATES, WATER OR GAS VALVES SHALL BE ADJUSTED TO NEW FINISH GRADE ELEVATION
8. ALL PIPE LENGTHS SHOWN ON DRAWINGS ARE FOR HYDRAULIC CALCULATION PURPOSES ONLY. IT IS THE RESPONSIBILITY OF THE CONTRACTOR TO DETERMINE EXACT LENGTHS REQUIRED FOR ACTUAL INSTALLATION.
9. CONSTRUCTION OF ALL SEWER LINES AND STRUCTURES SHALL BE IN ACCORDANCE WITH LOCAL AND STATE CODE, RULES AND REGULATIONS
10. WHERE WATER LINES AND SEWERS CROSS AND THE WATER LINE CANNOT BE PLACED ABOVE OR BELOW THE SEWER WITH A MINIMUM OF 18" VERTICAL CLEARANCE. THE SEWER MUST BE CONSTRUCTED OF WATER WORKS GRADE DUCTILE IRON PIPE WITH MECHANICAL JOINTS OR PLASTIC (SDR 26) SEWER PIPE WITH GASKETED, COMPRESSION–TYPE JOINTS WITHIN 10' OF THE WATER LINE.
11. WHERE WATER LINES AND SEWERS RUN PARALLEL AND A MINIMUM SEPARATION DISTANCE OF 10' CANNOT BE MAINTAINED, THE SEWER MUST BE CONSTRUCTED OF WATER WORKS GRADE DUCTILE IRON PIPE WITH MECHANICAL JOINTS OR PLASTIC (SDR 26) SEWER PIPE WITH GASKETED, COMPRESSION–TYPE JOINTS.
12. ANY FIELD TILES ENCOUNTERED DURING THE COURSE OF CONSTRUCTION SHALL BE PERPETUATED IN COMPLIANCE WITH STATE AND LOCAL LAWS AND REGULATIONS.
13. ALL STORM CASTINGS ARE TO BE OF THE "ENVIRONMENTAL" TYPE AND EMBOSSED WITH THE APPROPRIATE LANGUAGE AND SYMBOLS. USE NPDES PHASE II COMPLIANT CASTINGS (DUMP NO WASTE; DRAINS TO RIVER) WHERE AVAILABLE
14. CONTRACTOR TO CONTACT ARCHITECTURAL OR DEVELOPER FOR IRRIGATION SYSTEM AND GREASE TRAP DESIGNS.
15. CONTRACTOR SHALL REPAIR OR REPLACE ANY DAMAGED CONCRETE SIDEWALK OR CONCRETE CURB DISTRIBUTED BY CONSTRUCTION.

NOTICES AND PERMITS

1. THE CONTRACTORS SHALL BE RESPONSIBLE FOR OBTAINING OR VERIFYING THAT ALL PERMITS AND APPROVALS ARE OBTAINED FROM THE RESPECTIVE CITY, COUNTY OR STATE AGENCIES PRIOR TO STARTING ANY CONSTRUCTION.
2. IT SHALL BE THE CONTRACTOR'S RESPONSIBILITY TO DETERMINE THE EXACT LOCATION OF ALL UTILITIES IN THE VICINITY OF THE CONSTRUCTION AREA PRIOR TO STARTING ANY CONSTRUCTION.
3. IT SHALL BE THE CONTRACTOR'S RESPONSIBILITY FOR NOTIFICATION AND COORDINATION OF ALL CONSTRUCTION WITH THE RESPECTIVE UTILITY COMPANIES PRIOR TO STARTING ANY CONSTRUCTION.

LEGEND :

	PROPOSED STORM SEWER W/ END SECTION AND POND CONTROL BOX
—EX.SAN.—	EXISTING SANITARY SEWER W/ MANHOLE
	EXISTING STORM SEWER W/ END SECTION, DITCH INLET AND CURB INLET
EXW	EXISTING WATER LINE
EXG	EXISTING GAS LINE
BTC	EXISTING BURIED TELEPHONE CABLE
OHP	EXISTING OVERHEAD POWERLINE
PWP	EXISTING UTILITY POLE
	EXISTING TRAFFIC SIGN
752	EXISTING CONTOUR LINE
54.65	PROPOSED SPOT ELEVATION
M.E. 52.84	MATCH EXISTING GRADE
D.&U.E.	DRAINAGE AND UTILITY EASEMENT
B.S.L.	BUILDING SETBACK LINE
R/W	RIGHT–OF–WAY

SITE BENCHMARK:

1. TOP OF SANITARY SEWER CASTING, LOCATED AT THE NORTHEAST CORNER OF THE INTERSECTION OF ARVIN ROAD AND COMMERCE PARKWAY (ELEV. – 729.44)

PROPERTY LINES, DIMENSIONS AND EASEMENTS ARE PER THE ALTA/ACSM LAND TITLE SURVEY PREPARED BY BANNING ENGINEERING, DATED SEPTEMBER 22, 2011, RECORDED AS INSTRUMENT NUMBER 2011–025705 FOR THE JOHNSON COUNTY DEVELOPMENT CORP.

TOPOGRAPHICAL INFORMATION, INCLUDING UTILITIES, ARE PER THE TOPOGRAPHIC SURVEY PREPARED BY BANNING ENGINEERING FOR THE JOHNSON COUNTY DEVELOPMENT CORP.

Know what's below. Call before you dig.
"IT'S THE LAW"
CALL 2 WORKING DAYS BEFORE YOU DIG

THIS DRAWING/COMPUTER FILE IS THE PROPERTY OF PROJECTS PLUS AND ANY REPRODUCTION OR REUSE OF THIS DOCUMENT WITHOUT WRITTEN PERMISSION FROM PROJECTS PLUS IS PROHIBITED. ANY PERSON OR ENTITY USING THIS DOCUMENT FOR ANY PURPOSE OTHER THAN THE PROJECT FOR WHICH IT WAS ORIGINALLY INTENDED, WITH OR WITHOUT PERMISSION FROM PROJECTS PLUS, BY ITS USE AGREES TO INDEMNIFY AND HOLD HARMLESS PROJECTS PLUS FROM ANY LOSS, INCLUDING BUT NOT LIMITED TO ATTORNEY'S FEES, OCCURRING FROM THEIR USE.

SYMBOL	REVISION	DATE

SCALE 1"=30' | DRAWN JPH | CHECKED JKS | CERTIFIED JKS

PROJECT: COMMERCE BUSINESS PARK BUILDING #1
CITY OF FRANKLIN, JOHNSON COUNTY, INDIANA

TITLE: GRADING PLAN

PROJECTS plus
GREENWOOD SURVEYING COMPANY
CIVIL ENGINEERING – LAND SURVEYING
LAND PLANNING CONSTRUCTION MANAGEMENT
2555 Fairview Place Suite A – Greenwood, Indiana 46142
(317)–882–5003

SEAL: JEFFERY K. SMITH, REGISTERED No. 19419 STATE OF INDIANA, PROFESSIONAL ENGINEER — 7/18/13

JOB NUMBER 13011

SHEET 4 OF 10 SHEETS

DATE JULY 18, 2013

NOTICES AND PERMITS

1. THE CONTRACTOR SHALL BE RESPONSIBLE FOR OBTAINING OR VERIFYING THAT ALL PERMITS AND APPROVALS ARE OBTAINED FROM THE RESPECTIVE CITY, COUNTY OR STATE AGENCIES PRIOR TO STARTING ANY CONSTRUCTION.
2. IT SHALL BE THE CONTRACTOR'S RESPONSIBILITY TO DETERMINE THE EXACT LOCATION OF ALL UTILITIES IN THE VICINITY OF THE CONSTRUCTION AREA PRIOR TO STARTING ANY CONSTRUCTION.
3. IT SHALL BE THE CONTRACTOR'S RESPONSIBILITY FOR NOTIFICATION AND COORDINATION OF ALL CONSTRUCTION WITH THE RESPECTIVE UTILITY COMPANIES PRIOR TO STARTING ANY CONSTRUCTION.

NOTES:

1. ALL EROSION CONTROL MEASURES INDICATED SHALL BE MAINTAINED BY THE CONTRACTOR AND OWNER
2. THE CITY ENGINEER HAS THE RIGHT TO REQUIRE ADDITIONAL EROSION CONTROL MEASURES IN THE FIELD AS CONDITIONS WARRANT.
3. FOR EROSION CONTROL IMPLEMENTATION AND MAINTENANCE SCHEDULE SEE "EROSION CONTROL REQUIREMENTS" ON EROSION CONTROL DETAIL SHEET.
4. ALL EROSION CONTROL PRACTICES SHALL BE IN ACCORDANCE WITH THE "INDIANA STORM WATER QUALITY MANUAL" AND THE SCS "FIELD OFFICE TECHNICAL GUIDE".

SITE BENCHMARK:

1. TOP OF SANITARY SEWER CASTING, LOCATED AT THE NORTHEAST CORNER OF THE INTERSECTION OF ARVIN ROAD AND COMMERCE PARKWAY (ELEV. – 729.44)

PROPERTY LINES, DIMENSIONS AND EASEMENTS ARE PER THE ALTA/ACSM LAND TITLE SURVEY PREPARED BY BANNING ENGINEERING, DATED SEPTEMBER 22, 2011, RECORDED AS INSTRUMENT NUMBER 2011–025705 FOR THE JOHNSON COUNTY DEVELOPMENT CORP.

TOPOGRAPHICAL INFORMATION, INCLUDING UTILITIES, ARE PER THE TOPOGRAPHIC SURVEY PREPARED BY BANNING ENGINEERING FOR THE JOHNSON COUNTY DEVELOPMENT CORP.

LEGEND :

- PROPOSED STORM SEWER W/ END SECTION, DITCH INLET AND CURB INLET
- EXISTING STORM SEWER W/ END SECTION, DITCH INLET AND CURB INLET
- EX.SAN. — EXISTING SANITARY SEWER W/ MANHOLE
- 752 — EXISTING CONTOUR LINE
- S.S.,D.&U.E. — SANITARY SEWER, DRAINAGE AND UTILITY EASEMENT
- D.&U.E. — DRAINAGE AND UTILITY EASEMENT
- B.S.L. — BUILDING SETBACK LINE
- PROPOSED FLOWLINE
- PROPOSED FLOW DIRECTION
- MB — MULCH–SEED WITH NORTH AMERICAN GREEN DI–150 BLANKET OR EQUIVALENT (REQUIRED ALONG ALL DISTRUBED BANKS AND TO THE TOP OF BANKS FOR ALL SWALES)
- FF — FILTER FENCE
- MS — MULCH–SEED
- TS — TEMPORARY–SEED
- RR — HAND LAID 12" RIP–RAP REQUIRED
- DI — DROP INLET PROTECTION
- GP — GRAVEL DONUT DROP INLET PROTECTION
- RC — ROCK CHECK DAM
- EROSION CONTROL PROJECT SIGN: INCLUDES NOI LETTER, NAME & PHONE NO. OF CONTACT PERSON, LOCATION OF CONSTRUCTION PLANS

GENERAL NOTES:

1. ALL EROSION CONTROL MEASURES ARE REQUIRED TO BE PER INDIANA STORMWATER QUALITY MANUAL SPECIFICATION, DATED OCTOBER 2007, OR MOST CURRENT

2. TEMPORARY SEEDING – THE AREAS WHERE STRIPPING, CUTS OR FILLS HAVE BEEN GRADED SHALL BE SEEDED FOR SILT AND EROSION PROTECTION SHALL BE AS PER I.S.W.Q.M. SPECIFICATIONS (TEMPORARY SEEDING). SEEDING SHALL BE WITH ONE OF THE FOLLOWING METHODS:

A. EARLY SPRING MIX: 100% SPRING OATS SEEDING RATE: 100 LBS./ACRE

B. SPRING OR LATE FALL MIX: 100% ANNUAL RYEGRASS SEEDING RATE: 40 LBS./ACRE

C. FALL MIX: 100% PERENNIAL RYE SEEDING RATE 150 LBS./ACRE

3. MULCHING – MULCHING IS REQUIRED FOR ALL TEMPORARY AND PERMANENT SEEDED AREAS AS TO PREVENT REMOVAL BY WIND OR WATER. MULCHING SHALL BE ANCHORED AS OUTLINED IN I.S.W.Q.M. SPECIFICATIONS (MULCHING), BY A COMBINATION OF THE FOLLOWING:

A. MULCH ANCHORING TOOL OR FARM DISK
B. CLEATING WITH DOZER TRACKS
C. WOOD HYDROMULCH FIBERS
D. SYNTHETIC TACKIFIERS, BINDER OR SOILD STABLIZERS
E. NETTING

4. EROSION CONTROL BLANKET/NETTING – BLANKET IS REQUIRED AT SLOPED AREAS AND CONVEYANCE CHANNELS TO PREVENT EROSION AND PROTECT SOIL AND SEEDING FROM WATER RUNOFF. EROSION CONTROL BLANKETS SHALL BE INSTALLED PER CURRENT I.S.W.Q.M. SPECIFICATIONS (SURFACE STABILIZATION).

5. WATER QUALITY MAINTENANCE – AT THE COMPLETION OF CONSTRUCTION ALL EXCESS SOIL AND OTHER MATERIAL SHALL BE REMOVED FROM THE SITE. TO ENSURE PROPER WATER QUALITY THE SITE AND ITS STORM WATER CONVEYANCE FACILITIES SHALL BE INSPECTED AT REGULAR INTERVALS AND AFTER ALL MAJOR RAIN EVENTS. THE STORM WATER CONVEYANCE SYSTEMS SHALL BE KEPT FREE OF DEBRIS AND FLUIDS THAT COULD POTENTIALLY POLLUTE STORM WATER RUNOFF.

6. PROJECT SITE OWNER OR THEIR REPRESENTATIVE, KNOWLEDGEABLE IN EROSION AND SEDIMENT CONTROL, SHALL INSPECT THE SITE FOR STORM WATER POLLUTION PREVENTION DEFICIENCIES AT LEAST WEEKLY AND AGAIN WITHIN 24 HOURS OF EVERY 1/2 INCH RAIN EVENT.

7. ALL HAZARDOUS MATERIALS USED DURING THE CONSTRUCTION OF THIS SITE SHALL BE HANDLED AT ALL TIMES ACCORDING TO RECOMMENDATIONS IN THE MATERIAL SAFETY DATA SHEETS PROVIDED BY THE MANUFACTURER. SITE CONTRACTOR TO IMPLEMENT A SPILL PREVENTION PLAN PRIOR TO START OF CONSTRUCTION.

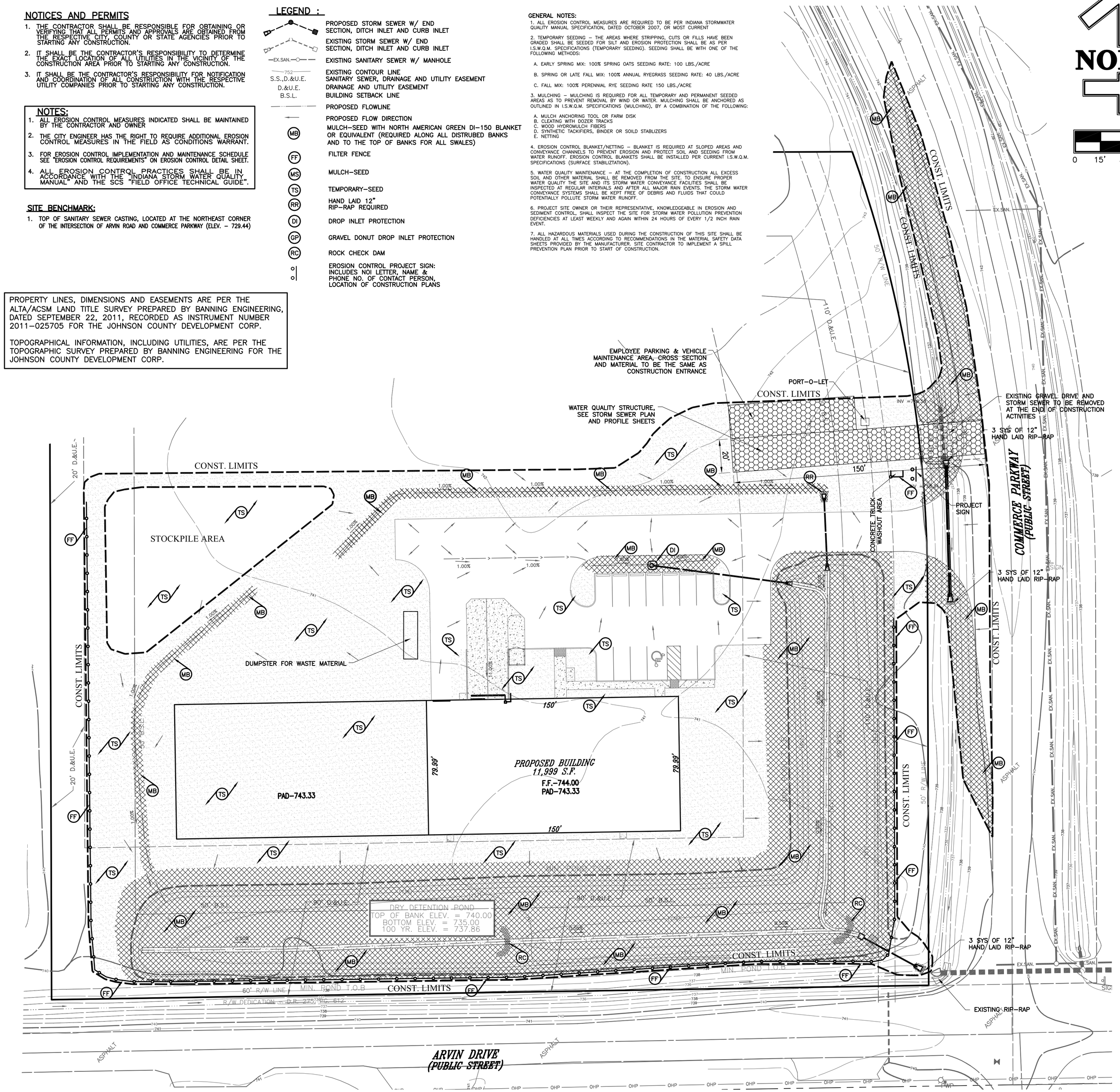

INDEX OF REQUIRED INFORMATION FOR CONSTRUCTION STORM WATER POLLUTION PREVENTION FOR COMMERCE BUSINESS PARK – BUILDING #1

EROSION CONTROL PLAN INDEX

ELEMENT	SHEET.	ELEMENT	SHEET.	ELEMENT	SHEET.	ELEMENT	SHEET.
A1	5	A12	N/A	A23	4	B10	5,8
A2	ATTACHED	A13	N/A			B11	5,8
A3	5	A14	5	B1	5	B12	5,8
A4	1	A15	5	B2	5,8	B13	5,8
A5	1	A16	5	B3	5,8	B14	5,8
A6	4	A17	2	B4	5,8	B15	5
A7	5	A18	8	B5	5,8	C1	5
A8	N/A	A19	6	B6	5,8	C2	8
A9	5	A20	N/A	B7	5,8	C3	8
A10	N/A	A21	5	B8	5,8	C4	8
A11	5	A22	2	B9	N/A	C5	5

A1.

A2. INCLUDED IN SUBMITTAL PACKET.
A3. COMMERCE BUSINESS PARK – BUILDING #1 IS LOCATED ON A TOTAL OF 6.021 ACRES. THE CONSTRUCTION IMPROVEMENTS SHALL CONSIST OF DIRT WORK, BUILDINGS, ASPHALT PAVEMENT, CONCRETE CURBS, STORM SEWER, A DRY DETENTION BASIN AND UTILITY SERVICE LINES.
A4. VICINITY MAP ON TITLE SHEET – SEE SHEET 1
A5. LEGAL DESCRIPTION ON TITLE SHEET – SEE SHEET 1
A6. LOTS AND IMPROVEMENTS SHOWN ON PROPOSED SITE CONDITIONS – SEE SHEET 4
A7. HYDROLOGIC UNIT CODE: 051202011140040
A8. NO STATE OR FEDERAL WATER QUALITY PERMITS ARE REQUIRED FOR THIS PROJECT.
A9. THE MAJORITY OF THE STORMWATER WILL DISCHARGE ACROSS THIS SITE FROM NORTH TO SOUTH INTO A PROPOSED DRY DETENTION BASIN, THIS POND WILL RELEASE TO AN EXISTING STORM SEWER UNDER COMMERCE PARKWAY. THIS PIPE ULTIMATELY DISCHARGES TO HURRICANE CREEK
A10. NO WETLANDS EXIST ON SITE
A11. RECEIVING WATERS: EXISTING DITCH, ULTIMATELY HURRICANE CREEK
A12. WE ANTICIPATE NO POTENTIAL AREAS WERE DISCHARGE WILL ENTER GROUNDWATER.
A13. NO 100 YEAR FLOODPLAINS, FLOODWAYS OF FLOODWAY FRINGES EXIST ON THIS SITE
A14. PRE–CONSTRUCTION 10 YEAR OUTFLOW = 3.51 C.F.S.
POST–CONSTRUCTION 10 YEAR OUTFLOW = 0.91 C.F.S.
A15. LAND USE OF ADJACENT PROPERTIES:
NORTH: INDUSTRIAL
WEST: INDUSTRIAL
SOUTH: INDUSTRIAL L
EAST: AGRICULTURE
A16. BOUNDARY OF DISTURBED AREA SHOWN ON PLANS – SEE SHEET 5
A17. EXISTING SITE IS AGRICULTURE FIELD– SEE SHEET 2
A18. SOIL MAP LOCATED ON EROSION CONTROL DETAIL SHEET – SEE SHEET 8
A19. LOCATION, SIZE AND DIMENSIONS OF STORM WATER SYSTEMS SHOWN ON UTILITY PLAN – SEE SHEET 6
A20. NO OFFSITE CONSTRUCTION ACTIVITIES WILL BE NECESSARY
A21. SOIL STOCKPILE, BORROW AND DISPOSAL AREAS SHOWN ON EROSION CONTROL PLANS – SEE SHEET 5
A22. EXISTING SITE TOPOGRAPHY SHOWN ON EXISTING SITE CONDITION PLANS – SEE SHEET 2
A23. PROPOSED FINAL SITE TOPOGRAPHY SHOWN ON PROPOSED SITE CONDITION PLANS – SEE SHEET 4

B1. POTENTIAL STORM WATER POLLUTANT SOURCES ASSOCIATED WITH CONSTRUCTION ACTIVITY INCLUDE GASOLINE, OIL AND OTHER FLUIDS FROM CONSTRUCTION EQUIPMENT, CONCRETE, ASPHALT AND SEDIMENT LADEN RUNOFF. CONTRACTOR SHALL ESTABLISH AN EMPLOYEE PARKING AREA AND VEHICLE MAINTENANCE AREA AS SHOWN ON THE PLANS. A PROPER CONCRETE WASHOUT AREA SHALL ALSO BE ESTABLISHED AS SHOWN ON THE PLANS.
B2. STORM WATER QUALITY MEASURES SHOWN ON PLANS – SEE GENERAL NOTE #5 THIS SHEET. IMPLEMENTATION SCHEDULE SHOWN ON EROSION CONTROL DETAILS SHEET – SEE SHEET 8
B3. CONSTRUCTION ENTRANCE LOCATION SHOWN ON EROSION CONTROL PLAN – SEE SHEET 6, 8
B4. SEDIMENT CONTROL MEASURES FOR SHEET FLOW SHOWN ON EROSION CONTROL PLANS – SEE SHEET 6
B5. SEDIMENT CONTROL MEASURES FOR CONCENTRATED FLOW SHOWN ON EROSION CONTROL PLANS – SEE SHEET 6. CONTRACTOR TO GRADE DIVERSIONARY DITCHES TO CHANNEL WATER TO DETENTION PONDS AS CONSTRUCTION PROCEEDS SO THAT SEDIMENT IS NOT ALLOWED TO FLOW OFFSITE.
B6. STORM SEWER INLET PROTECTION MEASURES SHOWN ON EROSION CONTROL PLANS – SEE SHEET 6, 8
B7. RUNOFF CONTROL MEASURES SHOWN ON EROSION CONTROL PLANS – SEE SHEET 6, 8
B8. STORM WATER OUTLET PROTECTION SHOWN ON EROSION CONTROL PLANS – SEE SHEET 6, 8
B9. NO GRADE STABILIZATION MEASURES ARE NECESSARY
B10. DETAILS FOR STORM WATER QUALITY MEASURES ARE SHOWN ON THE EROSION CONTROL SHEETS – SEE SHEET 6, 15
B11. SURFACE STABILIZATION METHODS SHOWN ON EROSION CONTROL SHEETS – SEE SHEET 6, 8
B12. PERMANENT SURFACE STABILIZATION SPECIFICATIONS SHOWN ON EROSION CONTROL SHEETS – SEE SHEET 6, 8
B13. MATERIAL HANDLING AND STORAGE ASSOCIATED WITH CONSTRUCTION ACTIVITY SHALL MEET THE SPILL PREVENTION AND SPILL RESPONSE REQUIREMENTS IN 327 IAC 2–6.1. FULL EMERGENCY PLAN SHOWN ON SHEET 8. ALL MATERIALS SHALL BE HANDLED IN ACCORDANCE WITH GUIDELINES SET FORTH IN MATERIAL SAFETY DATA SHEETS PROVIDED BY MANUFACTURER.
B14. SHOWN ON EROSION CONTROL SHEETS – SEE SHEET 6, 8
B15.
EROSION CONTROL FOR INDIVIDUAL BUILDING LOTS CONSTRUCTION SEQUENCE AS FOLLOWS:

1. CONSTRUCT STONE DRIVEWAY.
2. LIMIT ALL DELIVERIES TO THE STONE DRIVEWAY.
3. PRESERVE AS MUCH OF THE EXISTING VEGETATION AS POSSIBLE.
4. LARGE EXPOSED AREAS ON OR NEAR SLOPES WILL REQUIRE A SILT FENCE.
5. AFTER CONSTRUCTION OF FOUNDATION, ROUGH GRADE AND SEED LOT.
6. AFTER BUILDING GUTTERS ARE INSTALLED, USE TEMPORARY EXTENSIONS TO LET WATER PASS EXPOSED AREAS.
7. AFTER FINAL GRADING, SEED OR SOD THE YARD AS SOON AS POSSIBLE.

C1. EXPECTED POLLUTANTS ASSOCIATED WITH THE PROPOSED LAND USE INCLUDE FLUIDS FROM VEHICULAR TRAFFIC (I.E. OIL, GREASE, ANTIFREEZE, GASOLINE, ETC.), SAND AND GRIT FROM ROADWAY SURFACES AND SUBSTANCES ASSOCIATED WITH THE MAINTENANCE OF LAWNS AND GARDENS. THE ONLY OTHER REASONABLY FORESEEN POLLUTION FROM THIS SITE WILL BE MINIMAL AMOUNT OF LITTER AND TRASH FROM IMPROPER DISPOSAL.
C2. POST CONSTRUCTION STORMWATER QUALITY SHOULD BE INSTALLED PRIOR TO MAJOR LAND DISTURBANCE OCCURRING.

1. EROSION CONTROL MEASURES SHOWN ON THIS PLAN TO BE INSTALLED FIRST.
2. DETENTION PONDS AND ANY WATER QUALITY BEST MANAGEMENT PRACTICE (BMP) STRUCTURES TO BE UTILIZED FOR SEDIMENT CONTROL
3. INSTALL RIP RAP PROTECTION AT ALL END SECTIONS ENTERING POND AS SOON AS PIPES ARE IN PLACE.
4. INSPECT AND RE–SEED SWALES AS NEEDED AFTER COMPLETION OF FINAL GRADING.
5. MONITOR AND MAINTAIN SWALE AREAS UNTIL A MATURE STAND OF GRASS EXISTS.
6. CLEAN ALL CATCH BASINS OF DEBRIS WHEN GRADING IS COMPLETE.
7. SWEEP STREETS REGULARLY AND KEEP FREE OF DEBRIS.
8. FINAL STABILIZATION OF THE SITE USING PERMANENT SEEDING OF ALL OPEN AREAS.

C3. POST–CONSTRUCTION STORM WATER QUALITY WILL BE ACCOMPLISHED BY ROUTING THE SITE RUNOFF THROUGH A DRY DETENTION POND DESIGNED TO DETAIN, FOR AT LEAST 24 HOURS AFTER PEAK RUNOFF, 20% OF THE RUNOFF GENERATED FROM EITHER A 1–1/4" STORM EVENT OR 1/2" OF DIRECT RUNOFF, WHICHEVER IS GREATER. THE DETENTION FACILITY ACTS AS A PERMANENT STORMWATER CONTROL STRUCTURE PROVIDING BOTH DETENTION AND TREATMENT OF CONTAMINATED STORMWATER RUNOFF. THE POND'S NATURAL PHYSICAL, BIOLOGICAL, AND CHEMICAL PROCESSES THEN WORK TO REMOVE POLLUTANTS. SEDIMENTATION PROCESSES REMOVE PARTICULATES, ORGANIC MATTER, AND METALS, WHILE DISSOLVED METALS AND NUTRIENTS ARE REMOVED THROUGH BIOLOGICAL UPTAKE. FURTHER MAINTENANCE INCLUDES SWEEPING OF ALL PAVED SURFACES AS WELL AS COLLECTION OF ANY LITTER. ALL DRAINAGE SWALES AND GREEN SPACES WILL BE MAINTAINED WITH REGULAR MOWING DURING GROWING SEASONS.
C4. WATER QUALITY MEASURES (I.E. STRUCTURES) ARE IDENTIFIED ON THE EROSION CONTROL PLAN, SEE SHEET 6, AND DETAILS SHOWN ON THE STORM SEWER DETAIL SHEET 14.
C5. MAINTENANCE OF ALL STORM WATER POLLUTION PREVENTION MEASURES WILL BE THE RESPONSIBILITY OF THE PROJECT OWNER UTILIZING PROCEDURES OUTLINED ON THESE PLANS. ANY GRASSED OR VEGETATED AREAS THAT EXPERIENCE EROSION FROM RAINFALL EVENTS SHOULD BE REPAIRED AND REVEGETATED AS SOON AS POSSIBLE.
A. EROSION OF THE DETENTION POND BANKS SHOULD BE ADDRESSED AS SOON AS IT BECOMES VISIBLE BY FILLING THE ERODED AREA WITH SUITABLE SOIL AND ESTABLISHING VEGETATION IMMEDIATELY, PREFERABLY BY SODDING. THE SAME MEASURE SHOULD BE USED FOR STEEP BANKS OR ANY BERMS OR SWALES. THE PONDS SHOULD ALSO BE MONITORED FOR SEDIMENT. IF THE BOTTOM OF THE POND RECEIVED SIGNIFICANT SEDIMENT (LESS THAN 2 FEET DEEP), THE SEDIMENT SHOULD BE REMOVED AND REPLACED ONSITE. AN ENGINEER SHOULD BE CONTACTED TO IDENTIFY THE SOURCE AND RECOMMEND REPAIRS.
B. PAVEMENT AREAS SHOULD BE MONITORED FOR POLLUTANTS, ANY LARGE QUANTITIES OF FLUID SUCH AS OIL, ANTIFREEZE, BRAKE FLUID, ETC. FOUND ON THE PAVEMENT SHOULD BE REPORTED TO THE OWNER. THE OWNER SHOULD CLEAN THE POLLUTANTS AND PREVENT THE SOURCE FROM ENTERING THE SITE IN THE FUTURE. FINALLY, PAVEMENTS SHOULD ALSO BE MONITORED FOR SEDIMENT COMING FROM VEGETATIVE AREAS. IF POST CONSTRUCTION EROSION IS OCCURRING, THE SOURCE SHOULD BE RE–STABILIZED AS SOON AS POSSIBLE BY SEEDING, SODDING OR MULCHING.

PROJECT LOCATION:
LATITUDE: N 39°29'45"
LONGITUDE: W 86°02'31"

SITE CONTACT:
JOEL FRITZ, CTC (COMMERCIAL TEAM CONSTRUCTION)
2530 BLUFF ROAD, INDIANAPOLIS, IN 46225, (317) 782–8300

A SELF–MONITORING PROGRAM THAT INCLUDE THE FOLLOWING MUST BE IMPLEMENTED:
A) A TRAINED INDIVIDUAL SHALL PERFORM A WRITTEN EVALUATION OF THE PROJECT SITE
1. BY THE END OF THE NEXT BUSINESS DAY FOLLOWING EACH MEASURABLE STORM EVENT AND
2. AT LEAST ONE (1) TIME PER WEEK
B) THE EVALUATION MUST ADDRESS:
1. THE MAINTENANCE OF EXISTING STORM WATER QUALITY MEASURES TO ENSURE THEY ARE FUNCTIONING PROPERLY AND
2. IDENTIFY ADDITIONAL MEASURES NECESSARY TO REMAIN IN COMPLIANCE WITH ALL APPLICABLE STATUTES AND RULES.
C) WRITTEN EVALUATION REPORTS MUST INCLUDE:
1. THE NAME OF THE INDIVIDUAL PERFORMING THE ACTION
2. THE DATE OF THE EVALUATION
3. PROBLEMS IDENTIFIED AT THE PROJECT SITE AND
4. DETAILS OF CORRECTIVE ACTIONS RECOMMENDED AND COMPLETED.

811 Know what's below. Call before you dig. IT'S THE LAW CALL 2 WORKING DAYS BEFORE YOU DIG

THIS DRAWING/COMPUTER FILE IS THE PROPERTY OF PROJECTS PLUS ANY REPRODUCTION OR REUSE OF THIS DOCUMENT WITHOUT WRITTEN PERMISSION FROM PROJECTS PLUS IS PROHIBITED. ANY PERSON OR ENTITY USING THIS DOCUMENT FOR ANY PURPOSE OTHER THAN THE PROJECT FOR WHICH IT WAS ORIGINALLY INTENDED, WITH OR WITHOUT PERMISSION FROM PROJECTS PLUS, BY ITS USE AGREES TO INDEMNIFY AND HOLD HARMLESS PROJECTS PLUS FROM ANY LOSS, INCLUDING BUT NOT LIMITED TO ATTORNEY'S FEES, OCCURRING FROM THEIR USE.

DATE	REVISION	SYMBOL

SCALE 1"=30'
DRAWN JPH
CHECKED JKS
CERTIFIED JKS

PROJECT: COMMERCE BUSINESS PARK BUILDING #1
CITY OF FRANKLIN, JOHNSON COUNTY, INDIANA

TITLE: EROSION CONTROL PLAN

PROJECTS plus
GREENWOOD SURVEYING COMPANY
CIVIL ENGINEERING – LAND SURVEYING
LAND PLANNING – CONSTRUCTION MANAGEMENT
2355 Fairview Place Suite A – Greenwood, Indiana 46142
(317)–882–5003

SEAL
JEFFERY K. SMITH REGISTERED No. 19419 STATE OF INDIANA PROFESSIONAL ENGINEER
7/18/13

JOB NUMBER 13011

SHEET 5 OF 10 SHEETS

DATE JULY 18, 2013

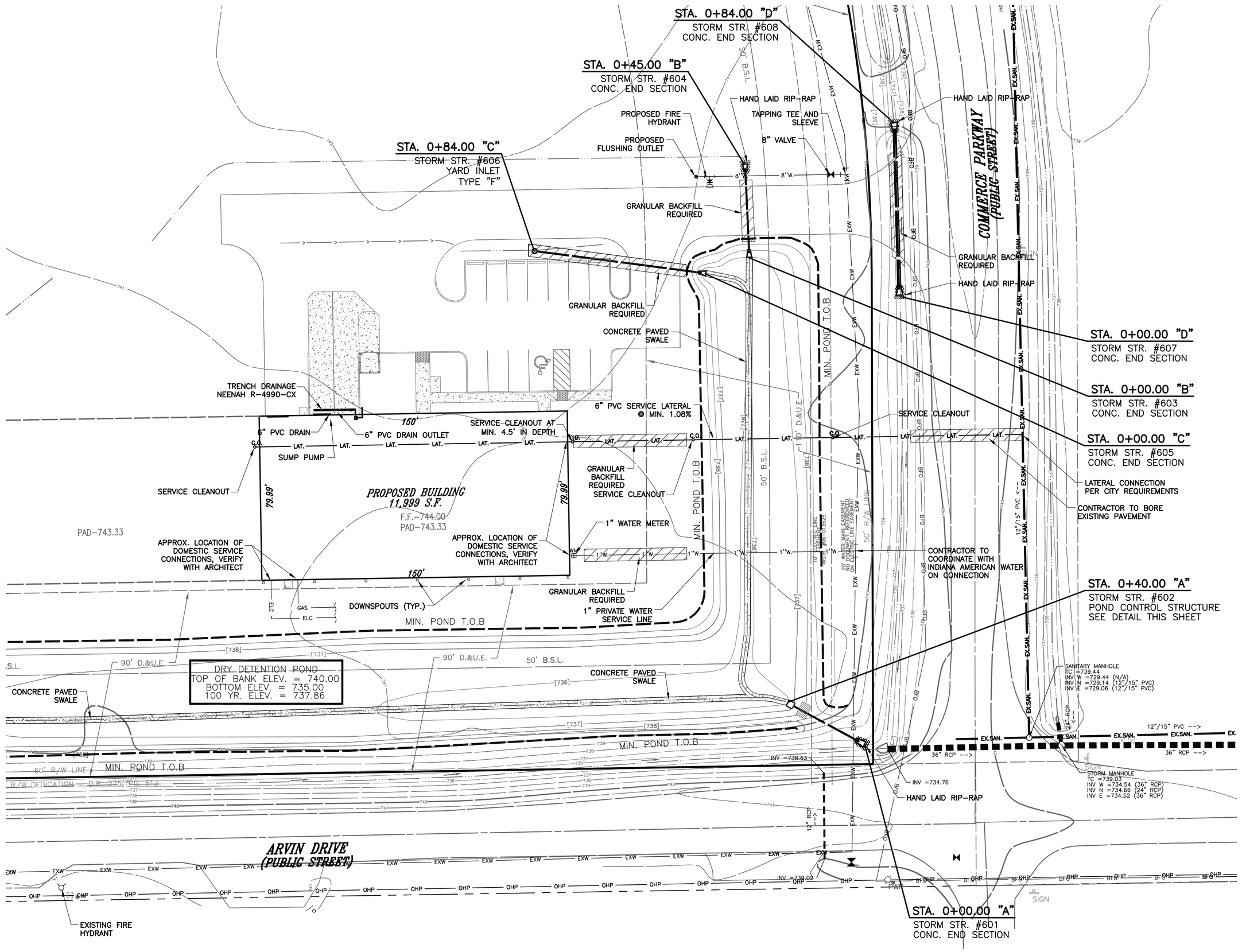

PROPERTY LINES, DIMENSIONS AND EASEMENTS ARE PER THE ALTA/ACSM LAND TITLE SURVEY PREPARED BY BANNING ENGINEERING, DATED SEPTEMBER 22, 2011, RECORDED AS INSTRUMENT NUMBER 2011-025705 FOR THE JOHNSON COUNTY DEVELOPMENT CORP.

TOPOGRAPHICAL INFORMATION, INCLUDING UTILITIES, ARE PER THE TOPOGRAPHIC SURVEY PREPARED BY BANNING ENGINEERING FOR THE JOHNSON COUNTY DEVELOPMENT CORP.

SITE BENCHMARK:

1. TOP OF SANITARY SEWER CASTING, LOCATED AT THE NORTHEAST CORNER OF THE INTERSECTION OF ARVIN ROAD AND COMMERCE PARKWAY (ELEV. - 729.44)

NORTH

0 15' 30' 45' 60'

LEGEND :

WM 1"W	PROPOSED WATER SERVICE LINE W/ WATER METER
8"W	PROPOSED WATER LINE W/ VALVE AND FIRE HYDRANT AND ASSEMBLY
ELC	PROPOSED ELECTRIC SERVICE LINE
GAS	PROPOSED GAS SERVICE LINE
C.O. LAT.	PROPOSED SANITARY SEWER LATERAL W/ CLEANOUT
EX.SAN.	EXISTING SANITARY SEWER W/ MANHOLE
EX.LAT.	EXISTING SANITARY SEWER LATERAL
	EXISTING STORM SEWER W/ END SECTION, DITCH INLET AND CURB INLET
EXW	EXISTING WATER LINE
OHP	EXISTING OVERHEAD POWERLINE
PWP	EXISTING UTILITY POLE
	EXISTING TRAFFIC SIGN
752	EXISTING CONTOUR LINE
D.&U.E.	DRAINAGE AND UTILITY EASEMENT
B.S.L.	BUILDING SETBACK LINE
R/W	RIGHT-OF-WAY

GENERAL NOTES:

1. CONTRACTOR SHALL RECOGNIZE RESPECTIVE WORK AND RESPONSIBILITY TO VERIFY LOCATION, SIZE, AND ELEVATION OF EXISTING UTILITIES, STRUCTURES, PIPES, PAVEMENTS, ETC. AS RELATED TO THEIR WORK. NOTIFY ARCHITECT/ENGINEER OF ANY CONFLICT AND/OR DISCREPANCIES IN THE CONSTRUCTION DOCUMENTS.
2. IT IS THE CONTRACTOR'S RESPONSIBILITY TO ACQUAINT HIMSELF WITH SUBSOIL CONDITIONS.
3. THE PLANS SHOW THE LOCATION OF ALL KNOWN UTILITIES LOCATED WITHIN THE LIMITS OF THE CONTRACT ACCORDING TO INFORMATION PROVIDED BY THE VARIOUS UTILITY COMPANIES. PREVIOUS CONSTRUCTION PLANS AND AS EVIDENCED BY OBSERVATION OF ABOVE GROUND CONDITIONS BY THE SURVEYOR. THE ACCURACY OF THIS INFORMATION IS NOT GUARANTEED.
4. CONTRACTORS SHALL CONSULT ARCHITECTURAL, PLUMBING AND ELECTRICAL PLANS FOR: INVERT ELEVATIONS AND EXACT LOCATION OF DOWNSPOUTS, WATER LINES GAS LINES, TRANSFORMER'S PAD OR POLE, AND BUILDING DIMENSIONS.
5. ALL PAVEMENT PATCHING DUE TO UTILITIES INSTALLATION; CONSTRUCTION OF CURBS, ETC., OR DAMAGE TO EXISTING PAVEMENT DURING CONSTRUCTION SHALL BE PATCHED WITH A PAVEMENT SECTION WHICH MEETS OR EXCEEDS JOHNSON COUNTY STANDARDS AS APPROVED BY THE ENGINEERING DEPARTMENT.
6. ALL GRASS AND/OR SHRUBBERY DISTURBED BY NEW CONSTRUCTION SHALL BE RESTORED TO ORIGINAL OR BETTER CONDITION.
7. ALL EXISTING MANHOLE AND CATCH BASIN GRATES, WATER OR GAS VALVES SHALL BE ADJUSTED TO NEW FINISH GRADE ELEVATION
8. ALL PIPE LENGTHS SHOWN ON DRAWINGS ARE FOR HYDRAULIC CALCULATION PURPOSES ONLY. IT IS THE RESPONSIBILITY OF THE CONTRACTOR TO DETERMINE EXACT LENGTHS REQUIRED FOR ACTUAL INSTALLATION.
9. CONSTRUCTION OF ALL SEWER LINES AND STRUCTURES SHALL BE IN ACCORDANCE WITH LOCAL AND STATE CODE, RULES AND REGULATIONS
10. WHERE WATER LINES AND SEWERS CROSS AND THE WATER LINE CANNOT BE PLACED ABOVE OR BELOW THE SEWER WITH A MINIMUM OF 18" VERTICAL CLEARANCE. THE SEWER MUST BE CONSTRUCTED OF WATER WORKS GRADE DUCTILE IRON PIPE WITH MECHANICAL JOINTS OR PLASTIC (SDR 26) SEWER PIPE WITH GASKETED, COMPRESSION-TYPE JOINTS WITHIN 10' OF THE WATER LINE.
11. WHERE WATER LINES AND SEWERS RUN PARALLEL AND A MINIMUM SEPARATION DISTANCE OF 10' CANNOT BE MAINTAINED, THE SEWER MUST BE CONSTRUCTED OF WATER WORKS GRADE DUCTILE IRON PIPE WITH MECHANICAL JOINTS OR PLASTIC (SDR 26) SEWER PIPE WITH GASKETED, COMPRESSION-TYPE JOINTS.
12. ANY FIELD TILES ENCOUNTERED DURING THE COURSE OF CONSTRUCTION SHALL BE PERPETUATED IN COMPLIANCE WITH STATE AND LOCAL LAWS AND REGULATIONS.
13. ALL STORM CASTINGS ARE TO BE OF THE "ENVIRONMENTAL" TYPE AND EMBOSSED WITH THE APPROPRIATE LANGUAGE AND SYMBOLS. USE NPDES PHASE II COMPLIANT CASTINGS (DUMP NO WASTE; DRAINS TO RIVER) WHERE AVAILABLE
14. CONTRACTOR TO CONTACT ARCHITECTURAL OR DEVELOPER FOR IRRIGATION SYSTEM AND GREASE TRAP DESIGNS.
15. CONTRACTOR SHALL REPAIR OR REPLACE ANY DAMAGED CONCRETE SIDEWALK OR CONCRETE CURB DISTRIBUTED BY CONSTRUCTION.

NOTICES AND PERMITS

1. THE CONTRACTORS SHALL BE RESPONSIBLE FOR OBTAINING OR VERIFYING THAT ALL PERMITS AND APPROVALS ARE OBTAINED FROM THE RESPECTIVE CITY, COUNTY OR STATE AGENCIES PRIOR TO STARTING ANY CONSTRUCTION.
2. IT SHALL BE THE CONTRACTOR'S RESPONSIBILITY TO DETERMINE THE EXACT LOCATION OF ALL UTILITIES IN THE VICINITY OF THE CONSTRUCTION AREA PRIOR TO STARTING ANY CONSTRUCTION.
3. IT SHALL BE THE CONTRACTOR'S RESPONSIBILITY FOR NOTIFICATION AND COORDINATION OF ALL CONSTRUCTION WITH THE RESPECTIVE UTILITY COMPANIES PRIOR TO STARTING ANY CONSTRUCTION.

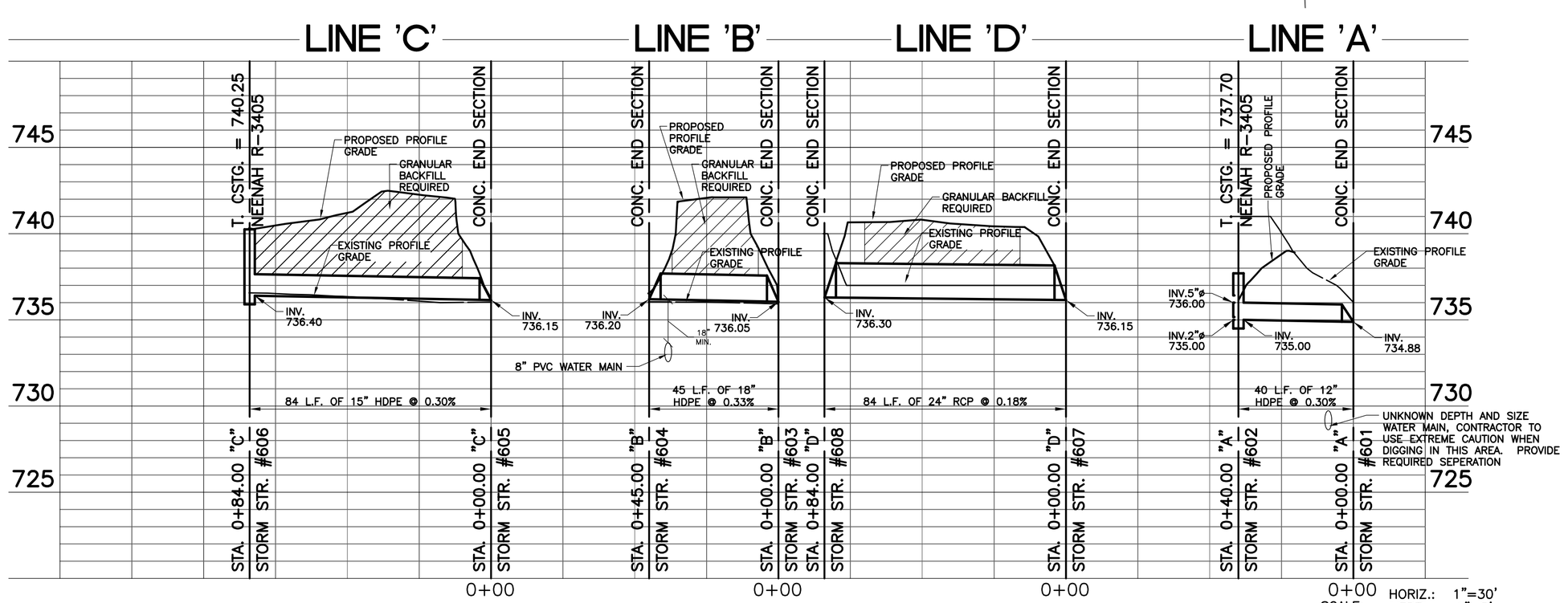

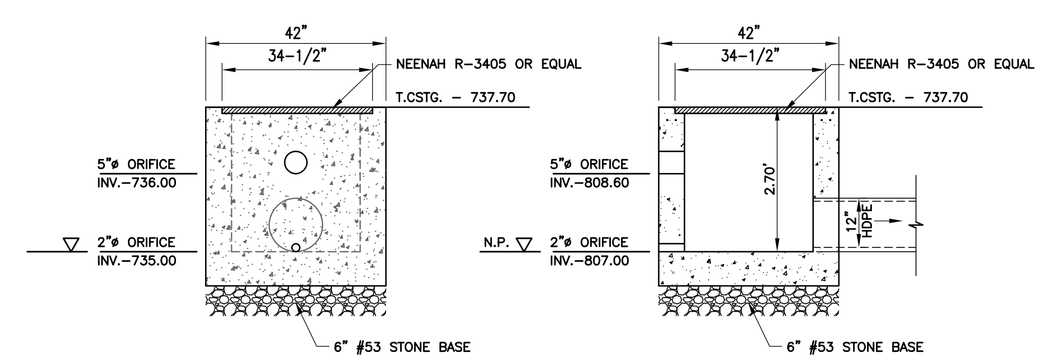

POND CONTROL STRUCTURE

Know what's below. Call before you dig.
"IT'S THE LAW"
CALL 2 WORKING DAYS BEFORE YOU DIG

THIS DRAWING/COMPUTER FILE IS THE PROPERTY OF PROJECTS PLUS ANY REPRODUCTION OR REUSE OF THIS DOCUMENT WITHOUT WRITTEN PERMISSION FROM PROJECTS PLUS IS PROHIBITED. ANY PERSON OR ENTITY USING THIS DOCUMENT FOR ANY PURPOSE OTHER THAN THE PROJECT FOR WHICH IT WAS ORIGINALLY INTENDED, WITH OR WITHOUT PERMISSION FROM PROJECTS PLUS, BY ITS USE AGREES TO INDEMNIFY AND HOLD HARMLESS PROJECTS PLUS FROM ANY LOSS, INCLUDING BUT NOT LIMITED TO ATTORNEY'S FEES, OCCURRING FROM THEIR USE.

SYMBOL	REVISION	DATE

SCALE 1"=30' | DRAWN JPH | CHECKED JKS | CERTIFIED JKS

PROJECT: COMMERCE BUSINESS PARK BUILDING #1
CITY OF FRANKLIN, JOHNSON COUNTY, INDIANA

TITLE: UTILITY PLAN

PROJECTS plus
GREENWOOD SURVEYING COMPANY
CIVIL ENGINEERING - LAND PLANNING - LAND SURVEYING CONSTRUCTION MANAGEMENT
2555 Fairview Place Suite A - Greenwood, Indiana 46142
(317)-882-5003

SEAL: JEFFERY K. SMITH REGISTERED No. 19419 STATE OF INDIANA PROFESSIONAL ENGINEER 7/18/13

JOB NUMBER 13011

SHEET 6 OF 10 SHEETS

DATE JULY 18, 2013

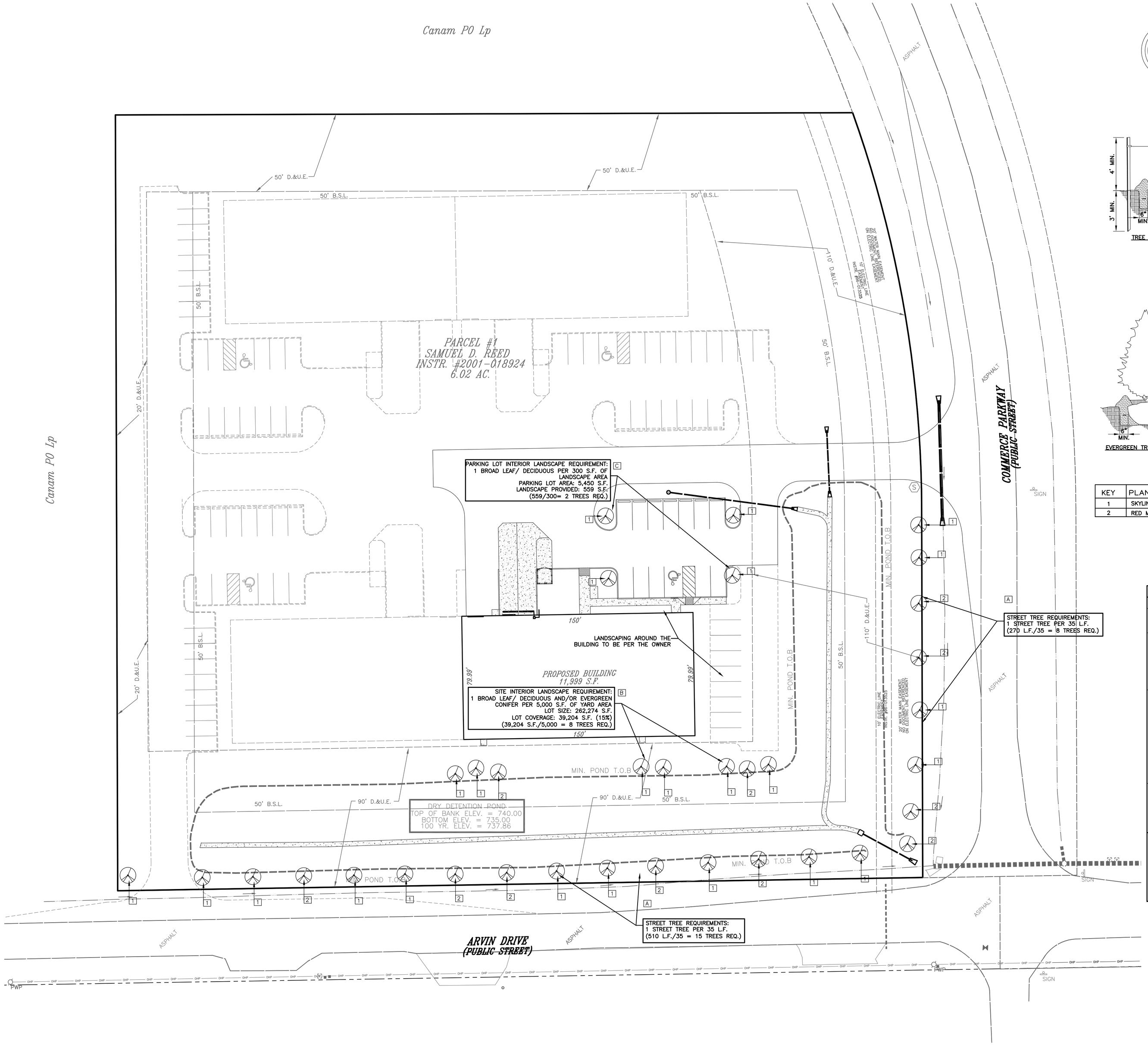

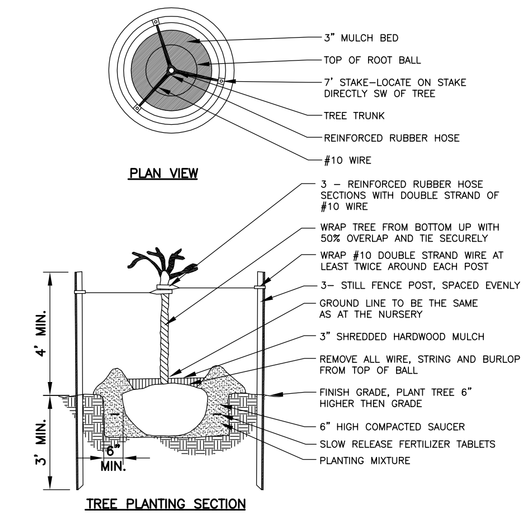

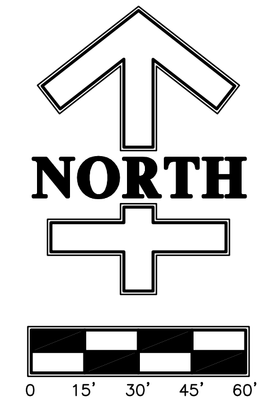

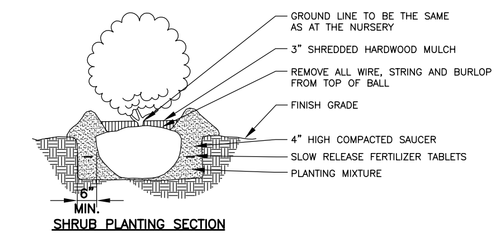

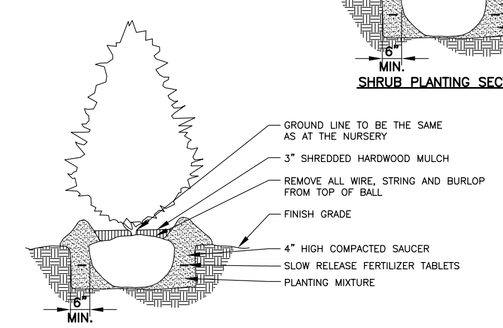

KEY	PLANT COMMON NAME	MIN. SIZE	PLANT BOTANIC NAME	QUANTITY	CATEGORY
1	SKYLINE HONEYLOCUST	2 1/2"	GLEDITSIA TRIACANTHOS	24	SHADE
2	RED MAPLE	2 1/2"	ACER RUBRUM	11	SHADE

LANDSCAPE LEGEND		
SYMBOL	REQUIRMENT	QUANITY
	1. PARKING LANDSCAPE PLANTING SHALL BE MODIFIED ONLY UNDER THE PLANNING DIRECTORS WRITTEN APPROVAL. 2. LANDSCAPING NOT TO OBSTRUCT LINE OF SIGHT FOR MOTOR VEHICLES.	
A	STREET TREE – TO BE IN ACCORDANCE WITH THE MOST CURRENT CITY OF FRANKLIN SUBDIVISION CONTROL ORDINANCE 6.15. a. MIN. OF 2 1/2" CALIBER AT 6" FROM TOP OF ROOT BALL. b. NOT WITHIN 25' OF AN INTERSECTION. c. NOT WITHIN 10' OF HYDRANT OR LATERAL. d. PERMITTED TREE TYPES PER APPROVED SPECIES LIST DESCRIBED IN THE PERMITTED STREET TREE TABLE.	23 TREES
B	SITE INTERIOR LANDSCAPE REQUIREMENTS – TO BE IN ACCORDANCE WITH THE MOST CURRENT CITY OF FRANKLIN ZONING ORDINANCE 7.16. a. 1 BROAD LEAF/ DECIDUOUS AND/OR EVERGREEN CONIFER PER THE FOLLOWING LAND TYPE: 1. 1 FOR EVERY 1,000 S.F. OF YARD AREA MULTI FAMILY RESIDENTIAL 2. 1 FOR EVERY 1,500 S.F. OF YARD AREA COMMERCIAL USE 3. 1 FOR EVERY 2,500 S.F. OF YARD AREA INSTITUTIONAL USE 4. 1 FOR EVERY 5,000 S.F. OF YARD AREA INDUSTRIAL USE b. ALL BROAD LEAF/ DECIDUOUS TREE MIN. OF 2 1/2" CALIBER AT 6" FROM TOP OF ROOT BALL. TRESS MAY BE LOCATED IN CLUSTERS OR DISPERSED THROUGHOUT THE SITE. c. ALL EVERGREEN TREE MIN. OF 5' IN HEIGHT. d. PERMITTED TREE TYPES PER APPROVED SPECIES LIST DESCRIBED IN THE LANDSCAPE STANDARDS.	8 TREES
C	PARKING LOT INTERIOR TREE – TO BE IN ACCORDANCE WITH THE MOST CURRENT CITY OF FRANKLIN ZONING ORDINANCE 7.16. a. 1 BROAD LEAF/ DECIDUOUS PER 300 S.F. OF LANDSCAPE AREA. b. ALL BROAD LEAF/ DECIDUOUS TREE MIN. OF 2 1/2" CALIBER AT 6" FROM TOP OF ROOT BALL. c. PERMITTED TREE TYPES PER APPROVED SPECIES LIST DESCRIBED IN THE LANDSCAPE STANDARDS.	2 TREES
D	PARKING LOT PERIMETER TREE/SHRUB – TO BE IN ACCORDANCE WITH THE MOST CURRENT CITY OF FRANKLIN ZONING ORDINANCE 7.16. a. 1 BROAD LEAF/ DECIDUOUS OR EVERGREEN TREE AND 1 SHRUB PER 80 L.F. OF LANDSCAPE AREA. b. ALL BROAD LEAF/ DECIDUOUS TREE MIN. OF 2 1/2" CALIBER AT 6" FROM TOP OF ROOT BALL. c. ALL EVERGREEN TREE MIN. OF 5' IN HEIGHT. d. ALL SHRUBS MIN. OF 18" IN HEIGHT. e. PERMITTED TREE TYPES PER APPROVED SPECIES LIST DESCRIBED IN THE LANDSCAPE STANDARDS.	0 TREES 0 SHRUBS

811
Know what's below.
Call before you dig.
"IT'S THE LAW"
CALL 2 WORKING DAYS BEFORE YOU DIG

THIS DRAWING/COMPUTER FILE IS THE PROPERTY OF PROJECTS PLUS ANY REPRODUCTION OR REUSE OF THIS DOCUMENT WITHOUT WRITTEN PERMISSION FROM PROJECTS PLUS IS PROHIBITED. ANY PERSON OR ENTITY USING THIS DOCUMENT FOR ANY PURPOSE OTHER THAN THE PROJECT FOR WHICH IT WAS ORIGINALLY INTENDED, WITH OR WITHOUT PERMISSION FROM PROJECTS PLUS, BY ITS USE AGREES TO INDEMNIFY AND HOLD HARMLESS PROJECTS PLUS FROM ANY LOSS, INCLUDING BUT NOT LIMITED TO ATTORNEY'S FEES, OCCURRING FROM THEIR USE.

SYMBOL	REVISION	DATE

SCALE 1"=30'
DRAWN JPH
CHECKED JKS
CERTIFIED JKS

PROJECT
COMMERCE BUSINESS PARK
BUILDING #1
CITY OF FRANKLIN, JOHNSON COUNTY, INDIANA

TITLE
LANDSCAPE PLAN

PROJECTS plus
GREENWOOD SURVEYING COMPANY
CIVIL ENGINEERING – LAND SURVEYING
LAND PLANNING – CONSTRUCTION MANAGEMENT
2355 Fairview Place Suite A – Greenwood, Indiana 46142
(317)-882-5003

SEAL
JEFFERY K. SMITH
REGISTERED
No. 19419
STATE OF INDIANA
PROFESSIONAL ENGINEER
7/18/13

JOB NUMBER
13011

SHEET
7
OF 10 SHEETS

DATE
JULY 18, 2013

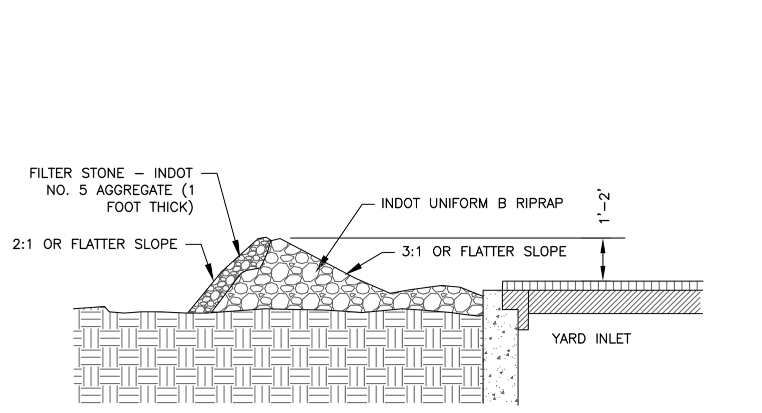

1. INSPECT ONCE PER WEEK OR AFTER EACH 1/2" OF RAINFALL.
2. IF ANY OF THE PROTECTOIN BECOMES INEFFECTIVE, REPLACE THE AFFECT PORTION IMMEDIATELY.
3. AFTER THE CONTRIBUTING DRAINAGE AREA HAS BEEN STABILIZED, REMOVE THE FENCE AND SEDIMENT DEPOSITS BRING THE DISTURBED AREA TO GRADE, AND STABILIZE.

GRAVEL DONUT DROP INLET PROTECTION

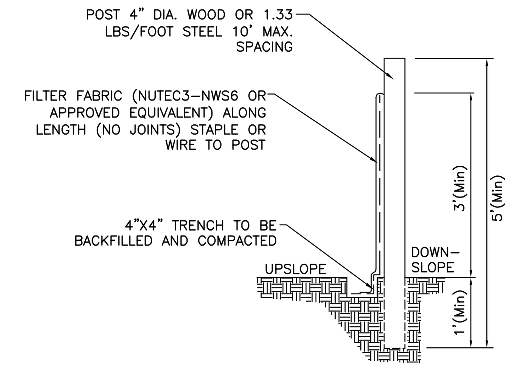

1. INSPECT ONCE PER WEEK OR AFTER EACH 1/2" OF RAINFALL.
2. IF FENCE FABRIC TEARS, STARTS TO DECOMPOSE, OR IN ANY WAY BECOMES INEFFECTIVE, REPLACE THE AFFECT PORTION IMMEDIATELY.
3. REMOVE DEPOSITED SEDIMENT WHEN IT REACHES HALF THE HEIGHT OF THE FENCE AT ITS LOWEST POINT OR IS CAUSING THE FABRIC TO BULGE.
4. TAKE CARE TO AVOID UNDERMINING THE FENCE DURING CLEAN OUT.
5. AFTER THE CONTRIBUTING DRAINAGE AREA HAS BEEN STABILIZED, REMOVE THE FENCE AND SEDIMENT DEPOSITS BRING THE DISTURBED AREA TO GRADE, AND STABILIZE.

FILTER FENCE INSTALLATION DETAIL

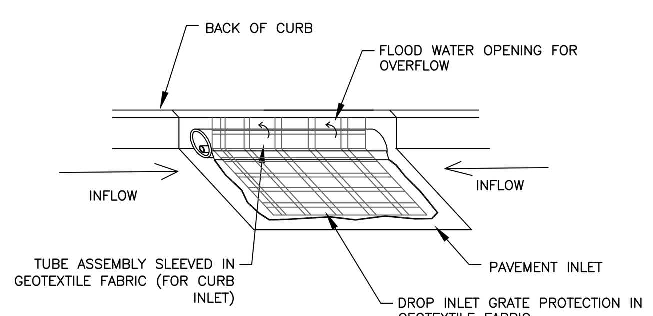

1. INSPECT ONCE PER WEEK OR AFTER EACH 1/2" OF RAINFALL.
2. IF INLET PROTECTION BECOMES INEFFECTIVE, REPLACE THE AFFECT PORTION IMMEDIATELY.
3. REMOVE DEPOSITED SEDIMENT WHEN IT REACHES HALF THE HEIGHT OF THE FENCE AT ITS LOWEST POINT.
4. AFTER THE CONTRIBUTING DRAINAGE AREA HAS BEEN STABILIZED, REMOVE THE FABRIC AND SEDIMENT DEPOSITS BRING THE DISTURBED AREA TO GRADE, AND STABILIZE.

PROTECTION DETAIL (PAVEMENT INLET)

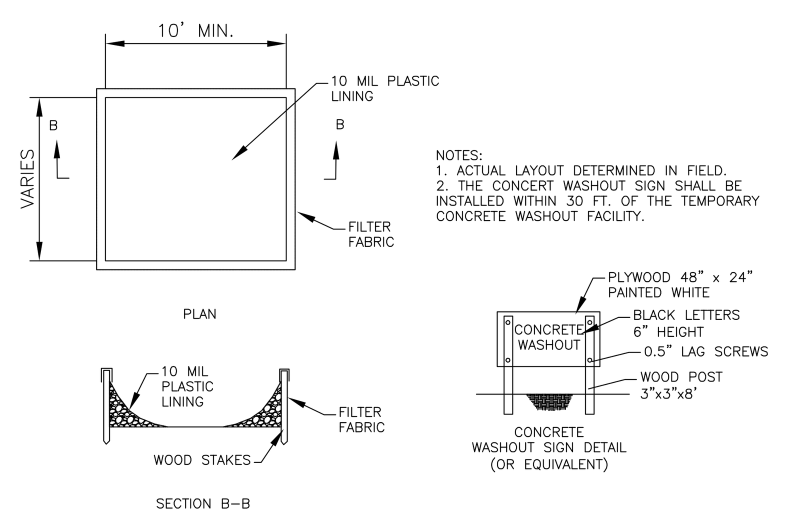

NOTES:
1. ACTUAL LAYOUT DETERMINED IN FIELD.
2. THE CONCERT WASHOUT SIGN SHALL BE INSTALLED WITHIN 30 FT. OF THE TEMPORARY CONCRETE WASHOUT FACILITY.

CONCRETE WASHOUT DETAIL

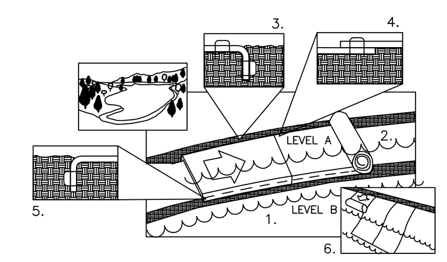

1. FOR OPTIMUM PERFORMANCE LOWER WATER FROM LEVEL A TO LEVEL B BEFORE INSTALLATION, IF POSSIBLE.
2. PREPARE SOIL BEFORE INSTALLING BLANKETS INCLUDING APPLICATION OF LIME, FERTILIZER AND SEED.
3. THE TOP EDGE OF THE BLANKET MUST BE ANCHORED IN A 6" DEEP X 6" WIDE TRENCH. BACKFILL AND COMPACT THE TRENCH AFTER STAPLING.
4. PLACE BLANKETS END OVER END WITH A 3" TO 4" OVERLAP. STAPLE THROUGH BOTH BLANKETS OF THE OVERLAPPED AREA, APPROXIMATELY 6" APART.
5. THE EDGE OF THE BLANKET THAT FALLS BELOW NORMAL WATER LEVEL MUST BE ANCHORED IN A 12" DEEP X 6" WIDE TRENCH. BACKFILL AND COMPACT THE TRENCH AFTER STAPLING. (STONE MAY BE SUBSTITUTED FOR SOIL BACKFILL).
6. IF BANK IS STEEP OR IF WATER LEVEL VARIES MORE THAN THE WIDTH OF THE BLANKET, USE VERTICAL INSTALLATION.

NOTE: IN LOOSE SOIL CONDITIONS, THE USE OF 18" OR LONGER METAL/WASHER PINS MAY BE NECESSARY TO PROPERLY ANCHOR THE BLANKETS.
REFFER TO GENERAL STAPLE PATTERN GUIDE FOR CORRECT STAPLE PATTERN RECOMMENDATIONS FOR SLOPE INSTALLATIONS.

SHORELINE APPLICATIONS

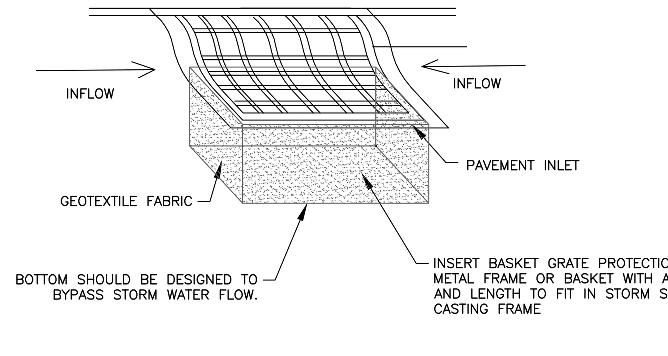

1. INSPECT ONCE PER WEEK OR AFTER EACH 1/2" OF RAINFALL. REMOVE EXCESS DEPOSITS, REPLACE OR CLEAN FABRIC AS NEEDED. IF INLET PROTECTION BECOMES INEFFECTIVE, REPLACE THE AFFECT PORTION IMMEDIATELY.
2. TO BE USED IN CONJUNCTION WITH OTHER SEDIMENT CONTROL MEASURES
3. AFTER THE CONTRIBUTING DRAINAGE AREA HAS BEEN STABILIZED, REMOVE THE INSERT AND SEDIMENT DEPOSITS.

TEMPORARY BASKET INSERT PROTECTION DETAIL (PAVEMENT INLET)

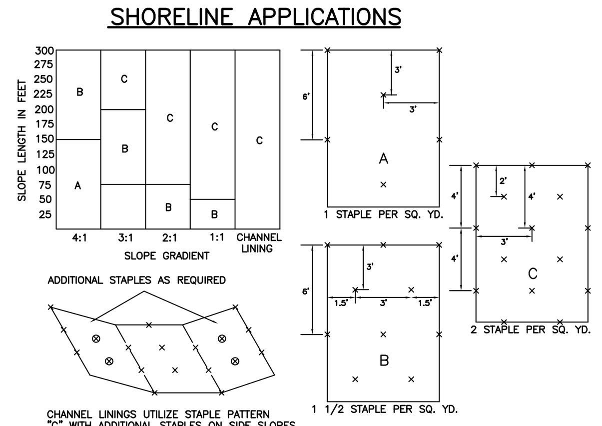

EROSION CONTROL BLANKET STAPLE PATTERN

GENERAL STAPLE RECOMMENDATIONS

STAPLE PATTERNS APPLY TO ALL NORTH AMERICAN GREEN EROSION CONTROL BLANKETS. STAPLE PATTERNS MAY VARY DEPENDING UPON SOIL TYPE AND AVERAGE ANNUAL RAINFALL.

AT SLOPE LENGTHS GREATER THAN 300 FEET OR WHERE DRAINAGE OVER LARGE AREAS IS DIRECTED ONTO THE BLANKETS, STAPLE PATTERN "C" SHOULD BE UTILIZED.

CHANNEL LININGS REQUIRED A 2.0' MINIMUM OVERLAP AT LONGITUDINAL JOINTS. SIDESLOPES SHALL REQUIRE A 6" MINIMUM OVERLAP. WHERE OVERLAPS OCCUR, THE UPSTREAM BLANKET SHALL OVERLAP THE DOWNSTREAM.

IF OTHER THAN NORTH AMERICAN GREEN EROSION CONTROL BLANKETS ARE INSTALLED FOLLOW THE INSTALLATION DIRECTIONS RECOMMENDED BY THAT PRODUCTS COMPANY.

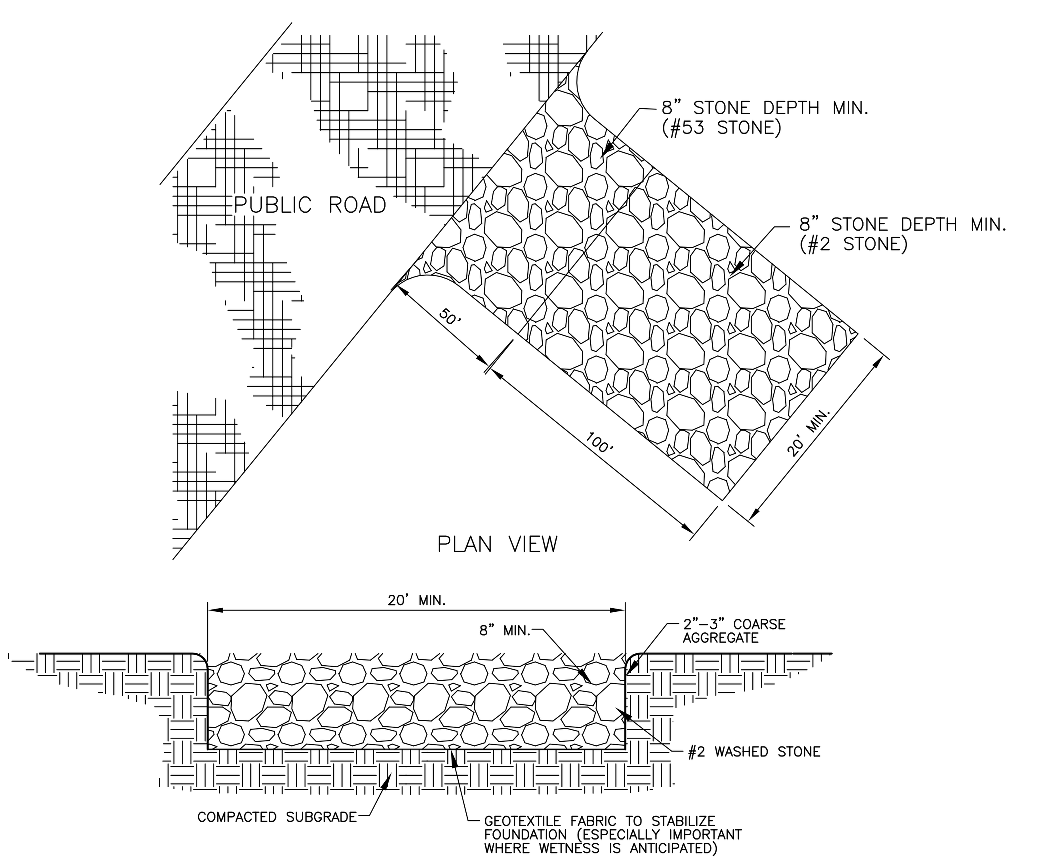

TEMPORARY CONSTRUCTION ENTRANCE DETAIL

1. STONE SIZE SHALL CONFORM TO ASTM D48 SIZE #1(2" TO 3" DIA.)
2. PERIODIC STONE TOP DRESSING & WASHING AS REQUIRED.

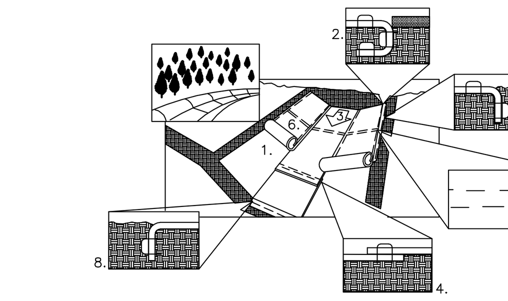

1. PREPARE SOIL BEFORE INSTALLING BLANKETS, INCLUDING APPLICATION OF LIME, FERTILIZER AND SEED.
2. BEGIN AT THE TOP OF THE CHANNEL BY ANCHORING THE BLANKET IN A 6" DEEP X 6" WIDE TRENCH. BACKFILL AND COMPACT THE TRENCH AFTER STAPLING.
3. ROLL CENTER BLANKET IN DIRECTION OF WATER FLOW ON BOTTOM OF CHANNEL.
4. PLACE BLANKETS END OVER END (SHINGLE STYLE) WITH A 6" OVERLAP. USE A DOUBLE ROW OF STAGGERED STAPLES 4" APART TO SECURE BLANKETS.
5. FULL LENGTH EDGE OF BLANKETS AT TOP OF SIDE SLOPES MUST BE ANCHORED IN6" DEEP X 6" WIDE TRENCH. BACKFILL AND COMPACT THE TRENCH AFTER STAPLING.
6. BLANKETS ON SIDE SLOPES MUST BE OVERLAPPED 4" OVER THE CENTER BLANKET AND STAPLED.
7. IN MEDIUM/HIGH FLOW CHANNEL APPLICATIONS, A STAPLE CHECK SLOT IS RECOMMENDED AT 30 TO 40 FOOT INTERVALS. USE A ROW OF STAPLES 4" APART OVER THE ENTIRE WIDTH OF THE CHANNEL. PLACE A SECOND ROW 4" BELOW THE FIRST ROW IN A STAGGERED PATTERN.
8. THE TERMINAL END OF THE BLANKETS MUST BE ANCHORED IN A 6" DEEP X 6" WIDE TRENCH. BACKFILL AND COMPACT THE TRENCH AFTER STAPLING.

NOTE:
HORIZONTAL STAPLE SPACING SHOULD BE ALTERED IF NECESSARY TO ALLOW STAPLES TO SECURE THE CRITICAL POINTS ALONG THE CHANNEL SURFACE.

CRITICAL POINTS
A. OVERLAPS AND SEAMS
B. PROJECTED WATER LINE
C. CHANNEL BOTTOM SIDE SLOPE VERTICES

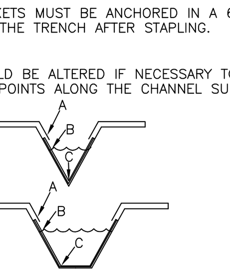

CHANNEL APPLICATIONS

SECTION 2 – MATERIAL HANDLING AND SPILL PREVENTION PLAN
MATERIAL HANDLING AND SPILL PREVENTION PLAN:
IN ORDER TO MINIMIZE THE RELEASE OF POTENTIAL POLLUTANTS DURING CONSTRUCTION THE CONTRACTORS SHALL IMPLEMENT THIS MATERIAL HANDLING AND SPILL PREVENTION PLAN. THE CONTRACTOR SHALL REVIEW THIS PLAN WITH ALL SUBCONTRACTORS AND REQUIRE THAT THEY IMPLEMENT THE PLAN AS WELL.

1. CONSTRUCTION EQUIPMENT
A. FUELING, LUBRICATION AND FLUIDS: ALL OPERATIONS INVOLVING THE ADDITION OF FLUIDS TO EQUIPMENT SHOULD BE DONE IN ONE LOCATION, AS DESIGNATED BY THE GENERAL CONTRACTOR, OR DEVELOPER/OWNER, SO THAT SPILLS ARE LIMITED TO ONE LOCATION ON THE SITE, WHICH WILL FACILITATE THE CLEANUP OF SPILLS. IF AN ONSITE–FUELING TANK IS PLANNED TO BE ON SITE, IT SHALL BE DOUBLE WALLED AND STORED IN THIS DESIGNED AREA. THIS LOCATION IS AN AREA THAT WILL NOT ALLOW SPILLED FLUIDS TO MIGRATE INTO SUBSURFACE SOILS. IN THE EVENT OF A SPILL, THE FLUID SHALL IMMEDIATELY BE CLEANED UP BY REMOVING THE CONTAMINATED SOIL OR STONE, WHICH SHALL BE DISPOSED OF IN AN ACCEPTABLE MANNER. SPILLS ON HARD SURFACES SHALL BE SOAKED UP BY AN ACCEPTABLE MATERIAL SUCH AS OIL DRY AND THE ABSORBENT MATERIAL DISPOSED OF IN A PROPER MANNER. THE SPILL SHALL ALSO BE REPORTED IMMEDIATELY TO THE CONTRACTOR'S SUPERINTENDENT.
B. EQUIPMENT REPAIR, ESPECIALLY WHEN FLUIDS MUST BE REMOVED FROM THE EQUIPMENT OR THE POSSIBILITY OF FLUID SPILLS IS HIGH, SHOULD ALWAYS BE DONE OFFSITE AT A FACILITY THAT IS MORE SUITABLE THAN A CONSTRUCTION SITE TO HANDLE SPILLS. WHEN EQUIPMENT MUST BE REPAIRED ONSITE IT SHOULD BE MOVED TO THE MAINTENANCE AND FUELING AREA IF POSSIBLE. OTHERWISE, SUITABLE ON SITE CONTAINERS SHOULD BE PLACED UNDER THE EQUIPMENT DURING REPAIR TO CATCH ANY SPILLED FLUIDS AND THESE FLUIDS SHOULD BE DISPOSED OF IN A PROPER MANNER.
C. ALL REUSABLE FLUID CONTAINERS, SUCH AS GASOLINE CANS, SHALL BE INSPECTED FOR LEAKS EACH TIME THEY ARE USED. IF LEAKS ARE FOUND, THE FLUID SHALL BE REMOVED FROM THE CONTAINER IN A PROPER MANNER AND THE CONTAINER DISPOSED OF IN AN ACCEPTABLE MANNER. EMPTY DISPOSABLE CONTAINER, SUCH AS GREASE TUBES AND LUBRICATING OIL AND BRAKE FLUID CONTAINERS, AND THEIR PACKAGING, SHALL BE DISPOSED OF IN A PROPER MANNER AND SHALL NOT BE LEFT ON THE GROUND OR IN THE OPEN ON THE CONSTRUCTION SITE.
2. CONSTRUCTION MATERIALS AND THEIR PACKAGING
A. EROSION CONTROL MEASURE SHOWN ON THE SUBJECT PROJECT SHALL BE IMPLEMENTED PRIOR TO AND DURING CONSTRUCTION IN THE PROPER SEQUENCING TO MINIMIZE SOIL EROSION. EROSION CONTROLS SHALL BE INSPECTED AND MAINTAINED AS DESCRIBED ELSEWHERE ON THE PLANS. EXCESSIVE DUSTING OF SOIL ON THE SITE SHALL BE MINIMIZED BY REDUCING CONSTRUCTION TRAFFIC ACROSS BARE SOIL DURING DRY AND/OR WINDY WEATHER, AND BY APPLYING WATER OR OTHER ACCEPTABLE DUST CONTROL MEASURES TO THE SOIL. UPON COMPLETION OF CONSTRUCTION AND SUITABLE ESTABLISHMENT OF PERMANENT VEGETATION, TEMPORARY EROSION CONTROL MEASURES SUCH AS SILT FENCE, CHECK DAMS AND INLET PROTECTION DEVICES SHALL BE REMOVED IN A MANNER TO MINIMIZE ADDITIONAL LAND DISTURBANCE. ANY AREAS DISTURBED BY THESE OPERATIONS SHALL BE PROPERLY REVEGATATED.
B. LARGE WASTE MATERIALS CREATED BY CUTTING, SAWING, DRILLING, OR OTHER OPERATIONS SHALL BE PROPERLY DISPOSED OF IN SUITABLE WASTE CONTAINERS. THE SITE SHALL BE CHECKED AT THE END OF THE DAY, AS A MINIMUM, AND ALL WASTE MATERIALS, INCLUDING THOSE BLOWN ACROSS OR OFF THE SITE BY WIND SHALL BE PICKED UP AND DISPOSED OF IN SUITABLE CONTAINERS. WHERE POSSIBLE, OPERATIONS SUCH AS SAWING THAT CREATE SMALL PARTICLES SHOULD BE PERFORMED IN ONE SPOT IN AN AREA PROTECTED FROM WIND, AND WASTE PARTICLES COLLECTED AND DISPOSED OF FREQUENTLY TO MINIMIZE WIND DISPERSAL.
PACKAGING USED TO TRANSPORT MATERIALS TO THE SITE FOR CONSTRUCTION OF THE FACILITY SHALL BE DISPOSED OF PROPERLY, WEATHER THE MATERIAL IS TAKEN OUT OF ITS PACKAGE AND INCORPORATED INTO THE PROJECT IMMEDIATELY OR STORED ONSITE FOR FUTURE USE. PACKAGED MATERIALS STORED ONSITE SHALL BE INSPECTED REGULARLY AND ANY LOOSE PACKAGING SHALL BE REPAIRED OR DISPOSED OF PROPERLY.
C. ALL DEWATERING OF ACTIVITIES SHALL BE DONE IN ACCORDANCE TO GOOD EROSION CONTROL PRACTICES. THESE PRACTICES SHOULD INCLUDE THE USE OF DIRT BAGS SUCH AS DANDY DIRT BAGS. THE USE OF THESE TYPES OF DEWATERING DEVICES WILL REMOVE LARGE QUANTITIES OF SILT, SEDIMENT, AND DIRT AND PREVENT THESE MATERIALS TO ENTER THE STORM SEWER SYSTEM.
D. IF THE USE OF LIME IS USED TO STABILIZE THE SOIL OF THE SITE THEN ALL CONSTRUCTION EQUIPMENT USED SHALL BE CLEANED OF ALL EXCESS MATERIAL WITH WATER IN THE MAINTENANCE AND REFUELING AREA AS SHOWN WITHIN THESE PLANS.
E. NUTRIENTS AND FERTILIZERS SHALL ONLY BE USED TO ESTABLISH RAPID VEGETATION. WHEN THESE PRODUCTS ARE UTILIZED, THE USER SHOULD PAY STRICT ATTENTION TO THE PRODUCTS RECOMMENDED USAGE.
3. CONCRETE WASTE WATER
A. ALL CONCRETE WASTEWATER SHALL BE DISPOSED OF IN THE DESIGNED AREA AS DIRECTED BY THE GENERAL CONTRACTOR OR DEVELOPER/OWNER. THIS AREA IS TO BE A 3' DEEP, 10' SQUARE PIT AS DETAILED ON THE EROSION CONTROL PLAN. THIS AREA SHALL BE INSPECTED ON A DAILY BASIS AT A MINIMUM. WHEN THIS AREA BECOMES FULL, THE POLLUTANTS SHALL BE EXCAVATED, PLACED IN AN ACCEPTABLE CONTAINER AND DISPOSED OF IN PROPER MANNER.
4. PAINT PRODUCTS
A. ALL EXCESS PAINT AND THEIR RELATED PRODUCTS SHALL BE DISPOSED OF IN THE MANNER AT WHICH THE MANUFACTURER SUGGESTS. UNDER NO CIRCUMSTANCES WILL PAINT OR THEIR RELATED PRODUCTS BE CLEANED OR DISPOSED OF IN SOIL, SANITARY SEWERS, STORM SEWERS OR DETENTION BASINS. ANY VIOLATION OF THIS SHALL BE REPORTED TO THE JOB SUPERINTENDENT.

IN THE EVENT OF ACCIDENTALLY CONTAMINATION ALL EFFORTS SHOULD BE MADE TO REMOVE CONTAMINANTS IN AN APPROPRIATE MANNER. THE JOHNSON COUNTY FIRE DEPARTMENT SHOULD BE CONTACTED IMMEDIATELY TO DETERMINE IF FURTHER MEASURES ARE NEEDED.

PERMANENT SEEDING SPECIFICATIONS:
1) ALL DISTURBED LAWN AREAS SHALL RECEIVE PERMANENT SEEDING IMMEDIATELY.
2) ALL DISTURBED LAWN AREA TO HAVE A MINIMUM OF 6 INCHES OF TOPSOIL (COMPACTED THICKNESS).
3) TOPSOIL TO BE FERTILE, FRIABLE, SANDY LOAM REASONABLY FREE OF SUBSOIL, CLAY LUMPS, STONES LARGER THAN ½", EXCESSIVE QUANTITIES OF SMALL STONE/GRAVEL, BRUSH AND OTHER LITER.
4) SOLVE ANY SURFACE OR SUBSURFACE DRAINAGE PROBLEMS AND CONSTRUCT PERMANENT EROSION CONTROL STRUCTURES.
5) PERFORM THE MAJOR FILLING, SHAPING AND SMOOTHING OF GULLIES OR ERODED AREAS.
6) HAVE TOPSOIL TESTED TO CHECK PH AND NUTRIENT LEVELS. PROVIDE FERTILIZER AND SOIL AMENDMENTS AS REQUIRED TO MEET/EXCEED MINIMUM REQUIREMENTS AS SUGGESTED ON SOILS TEST RESULTS FOR LAWNS.
7) WORK FERTILIZER AND SOIL NUTRIENTS INTO TOP 2–3 INCHES OF THE TOPSOIL WITH A SMALL DISK, HARROW OR RAKE OPERATED ACROSS THE SLOPE AS MUCH AS POSSIBLE.
8) ROLL THE TOPSOIL WITH A WATER BALLAST ROLLER WEIGHING 100 TO 300 POUNDS DEPENDING ON SOIL TYPE. ROLL WITH TOPSOIL IN A SEMI–DRY CONDITION IN TWO OPPOSITE DIRECTIONS (RIGHT ANGLES).
9) RAKE OR SCARIFY AND CUT OR FILL IRREGULARITIES THAT DEVELOP AS REQUIRED AND AGAIN ROLL UNTIL AREA IS TRUE AND UNIFORM, FREE FROM LUMPS, DEPRESSIONS AND IRREGULARITIES.
10) SOW SEED WITH ADEQUATE EQUIPMENT AT A TIME WHEN LITTLE OR NO WIND IS BLOWING. BROADCAST HALF OF SEED IN ONE DIRECTION AND THE OTHER HALF IN THE OPPOSITE DIRECTION (RIGHT ANGLES).
11) COVER SEED TO A DEPTH OF ⅛" BY RAKING OR HARROWING. PROVIDE A LIGHT LAYER OF STRAW OR HAY MULCH AT A RATE OF 2 TONS PER ACRE. APPLY TACKIFIER TO STABILIZE MULCH.
12) HYDROSEEDING IS ACCEPTABLE METHOD OF SEEDING.
13) KEEP TOPSOIL RELATIVELY MOIST UNTIL LAWN IS ESTABLISHED.
14) RESEED AREAS THAT DO NOT SHOW PROMPT GERMINATION AT 14 DAY INTERVALS UNTIL AN ACCEPTABLE STAND OF GRASS IS ASSURED.
15) ALL LAWNS SHALL BE GUARANTEED TO HAVE A FULL UNIFORM STAND OF ACCEPTABLE GRASS AT END OF ONE YEAR GUARANTEE PERIOD WITH NO BARE SPOTS COMPRISING MORE THAN 2% OF ANY LAWN AREA. ANY AREA SO NOTED WILL BE REWORKED UNTIL AN ACCEPTABLE STAND OF GRASS IS ESTABLISHED.
16) ALL LAWNS TO BE MAINTAINED UNTIL FINAL INSPECTION BY LANDSCAPE DESIGNER BUT NOT LESS THAN 60 DAYS FROM TIME OF INSTALLATION. MAINTENANCE TO INCLUDE WATERING, WEEDING, CULTIVATION, MULCHING, MOWING AND ALL OTHER NECESSARY OPERATIONS REQUIRED FOR PROPER ESTABLISHMENT OF LAWN.

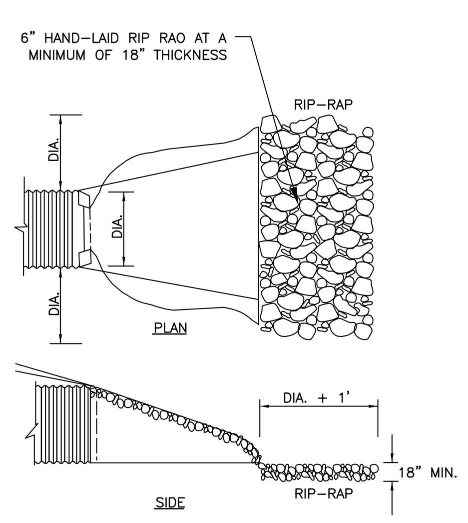

RIP RAP OUTFALL DETAILS

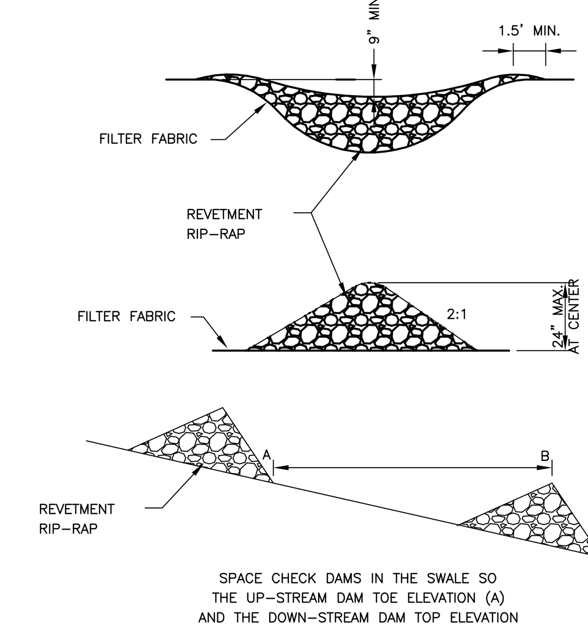

SPACE CHECK DAMS IN THE SWALE SO THE UP–STREAM DAM TOE ELEVATION (A) AND THE DOWN–STREAM DAM TOP ELEVATION (B) ARE THE SAME

ROCK CHECK DAM DETAIL

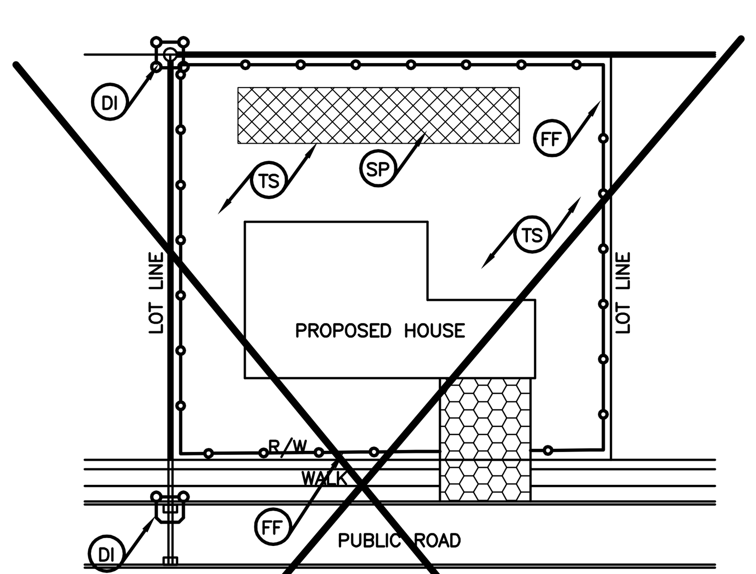

LEGEND :

- FF — FILTER FENCE
- TS — TEMPORARY–SEEDING
- DI — DROP INLET PROTECTION
- SP — STOCKPILE PROTECTION
- GRAVEL CONSTRUCTION ENTRANCE

INDIVIDUAL LOT EROSION PLAN

SOILS TYPE LEGEND

Br BROOKSTON SILTY CLAY LOAM
THE MAIN SOIL FEATURES THAT ADVERSELY AFFECT ENGINEERING USES OF THIS SOIL ARE A SEASONAL HIGH WATER TABLE, HIGH POTENTIAL FROST ACTION, MODERATE SHRINK–SWELL POTENTIAL, AND MODERATE PERMEABILITY. THIS SOIL HAS SEVERE LIMITATIONS FOR BUILDING SITES. THE SITES NEED TO BE ARTIFICIALLY DRAINED AND PROTECTED FROM FLOODING. DWELLINGS AND SMALL BUILDINGS WITH BASEMENTS SHOULD NOT BE CONSTRUCTED ON THIS SOIL. USING PROPERLY DESIGNED FOUNDATIONS AND FOOTINGS HELPS TO PREVENT STRUCTURAL DAMAGE FROM FROST ACTION AND SHRINKING AND SWELLING OF THE SOIL. THIS SOIL HAS SEVERE LIMITATIONS FOR LOCAL ROADS AND STREETS BECAUSE OF SEASONAL HIGH WATER TABLE AND HIGH POTENTIAL FROST ACTION. INSTALLATION OF DRAINAGE DITCHES ALONG ROADS HELPS TO LOWER THE WATER TABLE AND PREVENT DAMAGE FROM FROST ACTION. THE BASE MATERIAL FOR ROADS AND STREETS SHOULD BE REPLACED OR STRENGTHENED WITH SUITABLE MATERIAL.

CrA CROSBY SILT LOAM, 0 TO 3 PERCENT SLOPES
THE MAIN SOIL FEATURES THAT ADVERSELY AFFECT ENGINEERING USES OF THIS SOIL ARE MODERATE POTENTIAL FROST ACTION, MODERATE PERMEABILITY IN THE SUBSOIL, RAPID PERMEABILITY IN THE UNDERLYING MATERIAL, AND MODERATE SHRINK–SWELL POTENTIAL. THIS SOIL HAS SLIGHT LIMITATIONS FOR BUILDING SITES AND SEPTIC TANK ABSORPITON FIELDS. IT HAS MODERATE LIMITATIONS FOR LOCAL ROADS AND STREETS BECAUSE OF SHRINK–SWELL POTENTIAL. THE BASE MATERIAL FOR ROADS NEEDS TO BE STRENGTHENED OR REPLACED WITH SUITABLE MATERIAL.

MmB2 MIAMI SILT LOAM, 2 TO 6 PERCENT SLOPES, ERODED. THE MAIN SOIL FEATURES THAT ADVERSELY AFFECT ENGINEERING USES ARE MODERATE POTENTIAL FROST ACTION, MODERATE SHRINK–SWELL POTENTIAL, AND MODERATELY SLOW PERMEABILITY. THE SOIL HAS SEVERE LIMITATIONS FOR BUILDING SITES BECAUSE OF SLOPE. THIS SOIL HAS SEVERE LIMITATIONS FOR LOCAL ROADS AND STREETS. THIS SOILS HAS SEVERE LIMITATIONS FOR SEPTIC TANK ABSORPTION FIELDS BECAUSE OF MODERATELY SLOW PERMEABILITY AND SLOPE.

CsB2 CROSBY–MIAMI SILT LOAM
2 TO 4 PERCENT SLOPES. THE MAIN SOIL FEATURES THAT ADVERSELY AFFECT THE ENGINEERING USES OF THIS SOIL ARE A SEASONAL HIGH WATER TABLE, MODERATE SHRINK–SWELL POTENTIAL, HIGH POTENTIAL FROST ACTION, AND SLOW PERMEABILITY. THIS SOIL HAS SOME SEVERE LIMITATIONS FOR BUILDING SITES. THE SITES NEED TO BE ARTIFICIALLY DRAINED TO PREVENT WETNESS FROM BECOMING A PROBLEM. DWELLINGS AND SMALL BUILDINGS WITH BASEMENTS SHOULD NOT BE CONSTRUCTED ON THIS SOIL. USING PROPERLY DRAINED FOUNDATIONS AND FOOTINGS HELPS TO PREVENT STRUCTURAL DAMAGE FROM LOW STRENGTH AND SHRINKING AND SWELLING OF THE SOIL. THIS SOIL HAS SEVER LIMITATIONS FOR LOCAL ROADS AND STREETS. THE BASE MATERIAL FOR ROADS NEEDS TO BE STRENGTHENED OR REPLACED WITH SUITABLE MATERIAL.

MtC3 MIAMI CLAY LOAM
6 TO 12 PERCENT SLOPES, SEVERELY ERODED. THE MAIN SOIL FEATURES THAT ADVERSELY AFFECT THE ENGINEERING USES OF THIS SOIL ARE A MODERATE SHRINK–SWELL POTENTIAL, MODERATE POTENTIAL FROST ACTION, AND SLOW PERMEABILITY. THIS SOIL HAS MODERATE LIMITATIONS FOR LOCAL ROADS AND STREETS. THE BASE MATERIAL FOR ROADS NEEDS TO BE STRENGTHENED OR REPLACED WITH SUITABLE MATERIAL.

SECTION 1 – EMERGENCY RESPONSE NUMBERS

EMERGENCY RESPONSE TO ANY LIFE THREATENING PROBLEM	911
JOHNSON COUNTY FIRE DEPARTMENT	911
JOHNSON COUNTY POLICE DEPARTMENT	911
INDIANA DEPARTMENT OF NATURAL RESOURCES	812–477–8773
INDIANA DEPARTMENT OF ENVIRONMENTAL MANAGEMENT	317–233–7745
JOHNSON COUNTY SOIL AND WATER	317–342–5594

THIS PLAN TO BE USED FOR EROSION CONTROL PURPOSES ONLY. THE CITY/COUNTY ENGINEER HAS THE RIGHT TO REQUIRE ADDITIONAL EROSION CONTROL MEASURES IN THE FIELD AS CONDITIONS WARRANT.

ALL EROSION CONTROL PRACTICES SHALL BE IN ACCORDANCE WITH THE INDIANA STORM WATER QUALITY MANUAL DATED OCTOBER 2007 BY THE INDIANA DEPARTMENT OF ENVIRONMENTAL MANAGEMENT (IDEM).

INDIVIDUAL LOT EROSION NOTES :

1. ALL EROSION CONTROL MEASURE SHALL BE IN COMPLIANCE WITH THE INDIANA STORM WATER QUALITY MANUAL – PLANNING AND SPECIFICATIONS GUIDE FOR EFFECTIVE EROSION AND SEDIMENT CONTROL AND POST–CONSTRUCTION WATER QUALITY OCTOBER 2007.
2. THE SILT FENCE AND APPROPRIATE EROSION CONTROL SHALL BE INSTALLED PRIOR TO ANY CONSTRUCTION. LOCATION OF SILT FENCE TO APPROVED BY CITY.
3. CONCRETE WASHOUT BASIN TO BE AVAILABLE WITHIN SUBDIVISION OR BUILDER WILL NEED TO INSTALL ONE.

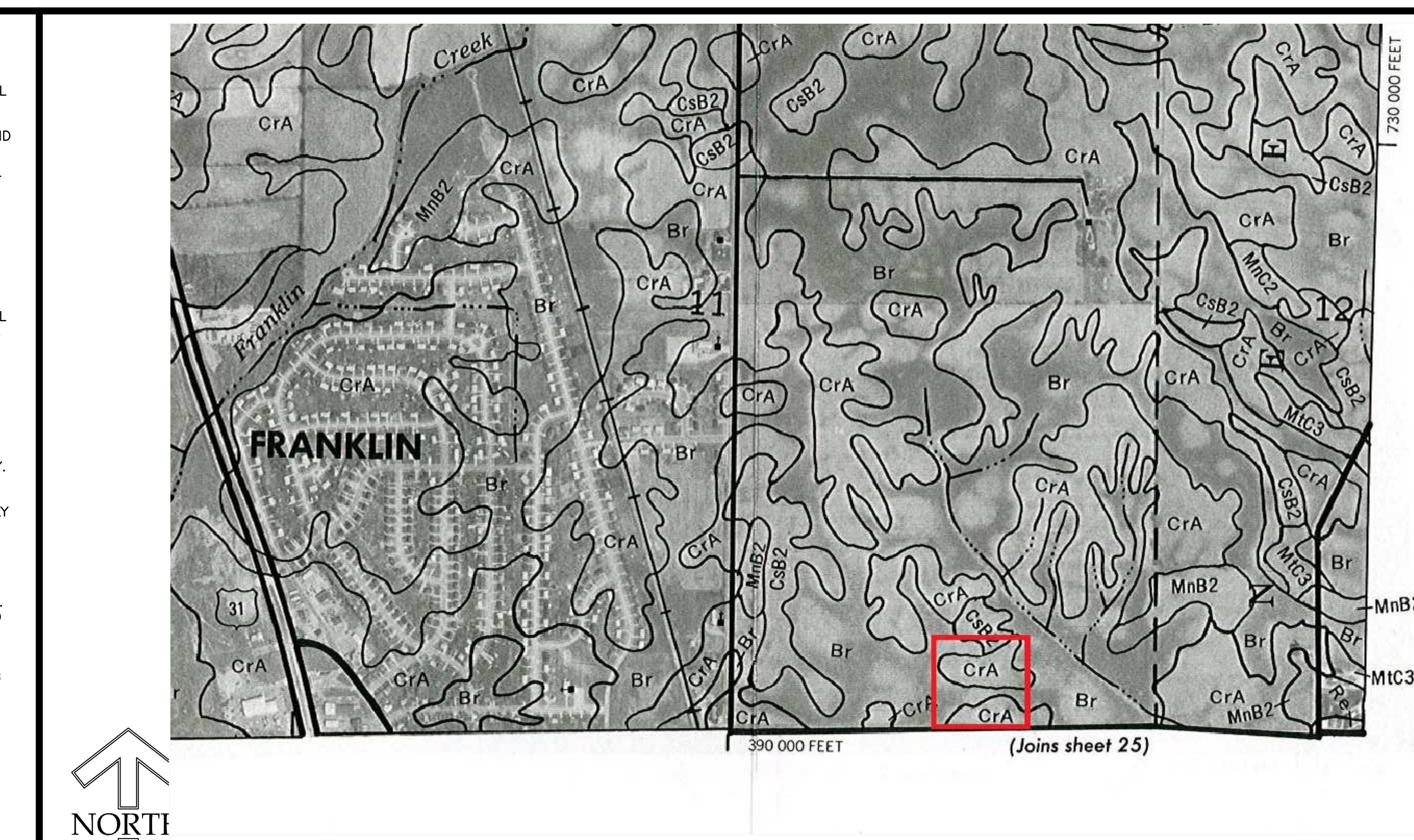

SOILS MAP

EROSION CONTROL REQUIREMENTS FOR COMPLIANCE WITH IDEM GENERAL PERMIT RULES FOR STORM WATER RUNOFF FROM CONSTRUCTION SITES

1. ALL EROSION CONTROL PRACTICES SHALL BE IN ACCORDANCE WITH THE INDIANA STORM WATER QUALITY MANUAL DATED OCTOBER 2007 BY THE INDIANA DEPARTMENT OF ENVIRONMENTAL MANAGEMENT (IDEM).
2. THE EROSION CONTROL MEASURES INCLUDED IN THIS PLAN SHALL BE INSTALLED PRIOR TO INITIAL LAND DISTURBANCE ACTIVITIES OR AS SOON AS PRACTICAL. SEDIMENT SHALL BE PREVENTED FROM DISCHARGING FROM THE PROJECT SITE BY INSTALLING AND MAINTAINING SILT FENCE, STRAW BALES, SEDIMENT BASINS, ETC. AS SHOWN I=ON THIS PLAN. IF SHOWN ON THIS PLAN, ENERGY–DISSIPATION DEVICES OR EROSION CONTROL AT THE OUTFALL OF THE STORM SEWER SYSTEM SHALL BE INSTALLED AT THE TIME OF THE CONSTRUCTION OF THE OUTFALL. THE PROPOSED DETENTION BASIN SHALL BE UTILIZED AS A SEDIMENT BASIN DURING CONSTRUCTION FOR AS LONG AS PRACTICAL.
3. ALL ON–SITE STORM DRAIN INLETS SHALL BE PROTECTED AGAINST SEDIMENTATION WITH FILTER FABRIC, OR EQUIVALENT BARRIERS AS SHOWN ON THIS PLAN.
4. EXCEPT AS PREVENTED BY INCLEMENT WEATHER CONDITIONS OR OTHER CIRCUMSTANCES BEYOND THE CONTROL OF THE CONTRACTOR / DEVELOPER APPROPRIATE EROSION CONTROL PRACTICES WILL BE INITIATED WITHIN (7) SEVEN DAYS OF THE LAST LAND DISTURBING ACTIVITY AT THE SITE. THE SITE SHALL BE STABILIZED BY SEEDING, SODDING, MULCHING, COVERING, OR BY OTHER EQUIVALENT EROSION CONTROL MEASURES.
5. THIS EROSION CONTROL PLAN SHALL BE IMPLEMENTED ON ALL DISTURBED AREAS WITHIN THE CONSTRUCTION SITE. ALL MEASURES INVOLVING EROSION CONTROL PRACTICES SHALL BE INSTALLED UNDER THE GUIDANCE OF A QUALIFIED PERSONNEL EXPERIENCED IN EROSION CONTROL AND FOLLOWING THE PLANS AND SPECIFICATIONS INCLUDED HEREIN.
6. DURING THE PERIOD OF CONSTRUCTION ACTIVITY, ALL SEDIMENT BASINS AND OTHER EROSION CONTROL MEASURES SHALL BE MAINTAINED BY THE CONTRACTOR. AT THE COMPLETION OF CONSTRUCTION, THE CONTRACTOR SHALL COORDINATE THE TRANSFER OF REQUIRED MAINTENANCE RESPONSIBILITIES WITH THE OWNER.
7. PUBLIC OR PRIVATE ROADWAYS SHALL BE KEPT CLEARED OF ACCUMULATED SEDIMENT. BULK CLEARING OF ACCUMULATED SEDIMENT SHALL NOT INCLUDE FLUSHING THE AREA WITH WATER. CLEARED SEDIMENT SHALL BE RETURNED TO THE POINT OF LIKELY ORIGIN OR OTHER SUITABLE LOCATION.
8. THE CONTRACTOR SHALL CONTROL WASTES, GARBAGE, DEBRIS, WASTEWATER, AND OTHER SUBSTANCES ON THE SITE IN SUCH A WAY THAT THEY SHALL NOT BE TRANSPORTED FROM THE SITE BY THE ACTION OF WINDS, STORM WATER RUNOFF, OR OTHER FORCES. PROPER DISPOSAL OR MANAGEMENT OF ALL WASTES AND UNUSED BUILDING MATERIALS APPROPRIATE TO THE NATURE OF THE WASTE OR MATERIAL IS REQUIRED.

EROSION CONTROL CONSTRUCTION SEQUENCE SCHEDULING

CONSTRUCTION PHASE (SPECIFIC ACTIVITIES OR EROSION CONTROL PRACTICES)	CONSTRUCTION SCHEDULE CONSIDERATIONS	MONITORING AND MAINTENANCE SCHEDULE	CONSTRUCTION START DATE (APPROX. DATE)
PRE–CONSTRUCTION ACTIONS (EVALUATION/PROTECTION OF IMPORTANT SITE CHARACTERISTICS)	BEFORE CONSTRUCTION, EVALUATE, MARK, AND PROTECT IMPORTANT TREES AND ASSOCIATED ROOTING ZONES, UNIQUE AREAS (e.g., WETLANDS) TO BE PRESERVED, ON–SITE SEPTIC SYSTEM ABSORPTION FIELDS, AND VEGETATION SUITABLE FOR FILTER STRIPS, ESPECIALLY IN PERIMETER AREAS.	ESTABLISH AND EVALUATE PROJECT ASSIGN SUPERINTENDENT WHOM WILL BE IN CHARGE OF OVERSEEING EROSION FACILITIES.	WEEK OF . (LASTING APPOX. 1 WEEK)
CONSTRUCTION ACCESS (CONSTRUCTION ENTRANCES, CONSTRUCTION ROUTES, EQUIPMENT PARKING AREAS)	STABILIZE BARE AREAS IMMEDIATELY WITH GRAVEL AND TEMPORARY VEGETATION PRIOR TO COMMENCING WORK.	INSPECT CONSTRUCTION ENTRANCE WEEKLY AND AFTER EACH 1/2" RAIN EVENT AND HEAVY USEAGE. RESHAPE AND TOP DRESS AS NEEDED INCLUDING REMOVAL OF IMMEDIATED SEDIMENTS BY SWEEPING OR BRUSHING. IF FLUSHING PROVIDE ADEQUATE SEDIMENT TRAPS FOR WATER CONVEYANCE.	WEEK OF . (LASTING APPOX. 1 WEEK)
SEDIMENT BARRIERS AND TRAPS (SEDIMENT BASINS, SILT FENCES, OUTLET PROTECTION)	INSTALL PRINCIPAL BASINS AFTER CONSTRUCTION SITE IS ASSESSED. INSTALL ADDITIONAL TRAPS AND BARRIERS AS NEEDED DURING GRADING. CONSTRUCT DETENTION BASINS AFTER CONSTRUCTED, INSTALL PERIMETER SWALES.	INSPECT THE FABRIC BARRIER WEEKLY AND AFTER EACH 1/2" RAIN EVENT, AND MAKE NEEDED REPAIRS IMMEDIATELY. REMOVE SEDIMENT FROM THE POOL AREA TO PROVIDE STORAGE FOR THE NEXT STORM. AVOID DAMAGING OR UNDERCUTTING THE FABRIC DURING SEDIMENT REMOVAL. WHEN THE CONTRIBUTING DRAINAGE AREA HAS BEEN STABILIZED, REMOVE AND PROPERLY DISPOSE OF ALL CONSTRUCTION MATERIAL AND SEDIMENT, GRADE THE AREA TO THE ELEVATION OF THE TOP OF THE INLET, THEN STABILIZE.	WEEK OF . (LASTING APPOX. 1 WEEK)
RUNOFF CONTROL (DIVERSIONS, PERIMETER DIKES, WATER BARS, OUTLET PROTECTION)	INSTALL PRACTICES AFTER PRINCIPAL SEDIMENT TRAPS ARE INSTALLED BUT BEFORE SITE GRADING. INSTALL ADDITIONAL RUNOFF CONTROL MEASURES DURING GRADING AS NEEDED.	INSPECT THE SEDIMENT BASIN WEEKLY AND AFTER EACH 1/2" RAIN EVENT. REMOVE AND PROPERLY DISPOSE OF SEDIMENT WHEN IT ACCUMULATES TO ONE–HALF THE DESIGN VOLUME (LEVEL MARKED BY A REFERENCE STAKE). PERIODICALLY CHECK THE EMBANKMENT, EMERGENCY SPILLWAY, AND OUTLET FOR EROSION DAMAGE, PIPING, SETTLING, SEEPAGE, OR SLUMPING ALONG THE TOE OR AROUND THE BARREL; AND REPAIR IMMEDIATELY. REMOVE TRASH AND OTHER DEBRIS FROM THE RISER, EMERGENCY SPILLWAY, AND POOL AREA. CLEAN OR REPLACE THE GRAVEL AROUND THE RISER IF THE SEDIMENT POOL DOES NOT DRAIN PROPERLY. REMOVE THE BASIN AFTER THE DRAINAGE AREA HAS BEEN PERMANENTLY STABILIZED, INSPECTED, AND APPROVED. DO SO BY DRAINING ANY WATER, REMOVING THE SEDIMENT TO A DESIGNATED DISPOSAL AREA, SMOOTHING THE SITE TO BLEND WITH THE SURROUNDING AREA, THEN STABILIZING.	WEEK OF . (LASTING APPOX. 1 WEEK)
RUNOFF CONVEYANCE SYSTEMS (STABILIZED STREAMBANKS, STORM SEWER DRAINS, INLET AND OUTLET PROTECTION, OPEN CHANNELS)	WHERE NECESSARY, STABILIZE STREAMBANKS AS EARLY AS POSSIBLE. INSTALL PRINCIPAL CONVEYANCE SYSTEM WITH RUNOFF CONTROL MEASURES. INSTALL REMAINDER OF SYSTEM AFTER GRADING.	PLACEMENT STORM SEWER DRAINS, INLETS AND PIPES TO BE IMMEDIATELY FOLLOWED BY INLET PROTECTION MEASURES AND TEMPORARY SEDIMENT TRAPS. OPEN CHANNEL DRAINAGE SWALES TO BE IMMEDIATELY FOLLOWED BY PLACEMENT OF EROSION CONTROL BLANKETS. INSPECT TEMPORARY SEDIMENT TRAPS WEEKLY AND AFTER EACH STORM EVENT, AND IMMEDIATELY REPAIR ANY EROSION AND PIPING HOLES. REMOVE SEDIMENT WHEN IT HAS ACCUMULATED TO ONE–HALF THE DESIGN DEPTH. REPLACE SPILLWAY GRAVEL FACING IF CLOGGED. INSPECT VEGETATION, AND RE–SEED IF NECESSARY. CHECK THE SPILLWAY DEPTH PERIODICALLY TO ENSURE A MINIMUM OF 1 1/2–FT. DEPTH FROM THE LOWEST POINT OF THE SETTLED EMBANKMENT TO HIGHEST POINT OF THE SPILLWAY CREST, AND FILL ANY LOW AREAS TO MAINTAIN DESIGN ELEVATION.	WEEK OF . (LASTING APPOX. 4 WEEK)
LAND CLEARING AND GRADING (CUTTING/FILLING, GRADING DRAINS, SEDIMENT TRAPS, BARRIERS, DIVERSIONS, SURFACE ROUGHENING)	BEGIN MAJOR CLEARING AND GRADING AFTER INSTALLING THE KEY SEDIMENT AND RUNOFF MEASURES. CLEAR BORROW AND DISPOSAL AREAS AS NEEDED. INSTALL ADDITIONAL CONTROL MEASURES AS GRADING PROGRESSES.	INSPECT NEWLY TOPSOILED AREAS WEEKLY UNTIL VEGETATION IS ESTABLISHED. REPAIR ERODED OR DAMAGED AREAS AND REVEGETATE.	WEEK OF . (LASTING APPOX. 4 WEEK)
SURFACE STABILIZATION (TEMPORARY AND PERMANENT SEEDING, MULCHING, SODDING, RIP–RAP)	APPLY TEMPORARY OR PERMANENT STABILIZATION MEASURES IMMEDIATELY ON ALL DISTURBED AREAS WHERE WORK IS DELAYED OR COMPLETED.	INSPECT WEEKLY AND ESPECIALLY AFTER EACH 1/2" RAIN EVENT, UNTIL THE STAND IS SUCCESSFULLY ESTABLISHED. (CHARACTERISTICS OF A SUCCESSFUL STAND INCLUDE: VIGOROUS DARK GREEN OR BLUISH–GREEN SEEDLINGS; UNIFORM DENSITY WITH NURSE PLANTS, LEGUMES, AND GRASSES WELL INTER– MIXES; GREEN LEAVES; AND THE PERENNIALS REMAINING GREEN THROUGHOUT THE SUMMER, AT LEAST AT THE PLANT BASE.) PLAN TO ADD FERTILIZER THE FOLLOWING GROWING SEASON ACCORDING TO SOIL TEST RECOMMENDATIONS. REPAIR DAMAGED, BARE, OR SPARSE AREAS BY FILLING ANY GULLIES, RE–FERTILIZING, OVER–OR RE–SEEDING, AND MULCHING. IF PLANT COVER IS SPARSE OR PATCHY, REVIEW THE PLANT MATERIALS CHOSEN, SOIL FERTILITY, MOISTURE CONDITION, AND MULCHING; THEN REPAIR THE AFFECTED AREA EITHER BY OVER–SEEDING OR BY RE–SEEDING AND MULCHING AFTER RE– PREPARING THE SEEDBED. IF VEGETATION FAILS TO GROW, CONSIDER SOIL TESTING TO DETERMINE ACIDITY OR NUTRIENT DEFICIENCY PROBLEMS. IF ADDITIONAL FERTILIZATION IS NEEDED TO GET A SATISFACTORY STAND, DO SO ACCORDING TO SOIL TEST RECOMMENDATIONS. INSPECT AFTER STORM EVENTS TO CHECK FOR MOVEMENT OF MULCH OR FOR EROSION. IF WASHOUT, BREAKAGE, OR EROSION IS PRESENT, REPAIR THE SURFACE, THEN RE–SEED, RE–MULCH AND, IF APPLICABLE, INSTALL NEW NETTING. CONTINUE INSPECTIONS UNTIL VEGETATION IS FIRMLY ESTABLISHED. INSPECT PERIODICALLY FOR DISPLACED ROCK MATERIAL, SLUMPING, AND EROSION AT EDGE, ESPECIALLY DOWNSTREAM OR DOWN SLOPE. (PROPERLY DESIGNED AND INSTALLED RIPRAP USUALLY REQUIRES VERY LITTLE MAINTENANCE IF PROMPTLY REPAIRED.)	WEEK OF . (LASTING APPOX. 2 WEEK)
UTILITY / PAVEMENT CONSTRUCTION (UTILITIES, PAVING)	INSTALL NECESSARY EROSION AND SEDIMENT CONTROL PRACTICES AS WORK TAKES PLACE.	DURING VEGETATIVE ESTABLISHMENT, INSPECT WEEKLY AND AFTER EACH 1/2" RAIN EVENT FOR ANY EROSION BELOW THE BLANKET. IF ANY AREA SHOWS EROSION, PULLBACK THAT PORTION OF THE BLANKET COVERING IT, ADD SOIL, RE–SEED THE AREA, AND RE– LAY AND STAPLE THE BLANKET. AFTER VEGETATIVE ESTABLISHMENT, CHECK THE TREATED AREA PERIODICALLY.	WEEK OF . (LASTING APPOX. 6 WEEK)
BUILDING CONSTRUCTION	INSTALL NECESSARY EROSION AND SEDIMENT CONTROL PRACTICES AS WORK TAKES PLACE.	DURING VEGETATIVE ESTABLISHMENT, INSPECT WEEKLY AND AFTER EACH 1/2" RAIN EVENT FOR ANY EROSION BELOW THE BLANKET. IF ANY AREA SHOWS EROSION, PULLBACK THAT PORTION OF THE BLANKET COVERING IT, ADD SOIL, RE–SEED THE AREA, AND RE– LAY AND STAPLE THE BLANKET. AFTER VEGETATIVE ESTABLISHMENT, CHECK THE TREATED AREA PERIODICALLY.	WEEK OF . (LASTING APPOX. 3 YEARS)
LANDSCAPING AND FINAL STABILIZATION (TOPSOIL, TREES, AND SHRUBS, PERMANENT SEEDING, MULCHING, SODDING, RIP–RAP)	STABILIZE ALL OPEN AREAS INCLUDING BORROW AND SPOIL AREAS. REMOVE TEMPORARY CONTROL MEASURES AND STABILIZE. PERMANENT SEED ALL BARE SOIL AREAS.	INSPECT WEEKLY AND AFTER EACH 1/2" RAIN EVENT, UNTIL THE STAND IS SUCCESSFULLY ESTABLISHED. REPAIR DAMAGED, BARE, OR SPARSE AREAS BY FILLING ANY GULLIES, RE–FERTILIZING, OVER–OR RE–SEEDING, AND MULCHING. IF PLANT COVER IS SPARSE OR PATCHY, REVIEW THE PLANT MATERIALS CHOSEN, SOIL FERTILITY, MOISTURE CONDITION, AND MULCHING; THEN REPAIR THE AFFECTED AREA EITHER BY OVER–SEEDING OR BY RE–SEEDING AND MULCHING AFTER RE– PREPARING THE SEEDBED. IF ADDITIONAL FERTILIZATION IS NEEDED TO GET A SATISFACTORY STAND, DO SO ACCORDING TO SOIL TEST RECOMMENDATIONS.	WEEK OF . (LASTING APPOX. 2 WEEK)

MAINTENANCE–– INSPECT PRACTICES ONCE A WEEK, & AFTER EACH 1/2" RAIN EVENT.

SYMBOL	REVISION	DATE

PROJECT: COMMERCE BUSINESS PARK
BUILDING #1
CITY OF FRANKLIN, JOHNSON COUNTY, INDIANA

TITLE: EROSION CONTROL DETAILS

SCALE: NONE
DRAWN: JPH
CHECKED: JKS
CERTIFIED: JKS

PROJECTS plus
GREENWOOD SURVEYING COMPANY
CIVIL ENGINEERING – LAND SURVEYING
LAND PLANNING – CONSTRUCTION MANAGEMENT
2555 Fairview Place Suite A – Greenwood, Indiana 46142
(317)–882–5003

SEAL
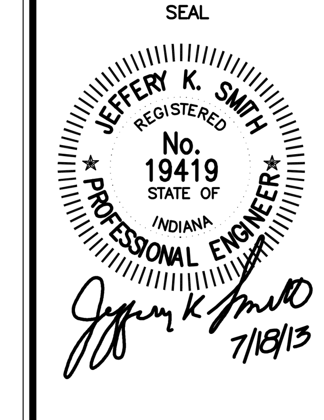

JOB NUMBER 13011
SHEET 8
OF 10 SHEETS
DATE JULY 18, 2013

STREET DETAILS

TYPICAL SECTION, CURB & GUTTER STREETS
GRANULAR BACKFILL WILL NOT BE REQUIRED WHEN ENTIRE TRENCH ARE IS 5'-0" OR MORE BEYOND THE BACK EDGE OF THE EXISTING CURB.

ALL EXCAVATED AREA UNDER PAVED ROADWAYS, OR WITHIN 5'-0" OF THE PAVEMENT EDGE, OR BACK OF CURB SHALL BE BACKFILLED WITH GRANULAR MATERIAL TO WITHIN 3 INCHES OF THE TOP OF THE TRENCH (OR TO FINAL GRADE UNDER PAVEMENT). THIS GRANULAR BACKFILL SHALL BE PLACED IN 12 INCH LIFTS AND EACH LAYER SHALL BE COMPACTED BY MECHANICAL MEANS TO AT LEAST 95% OF ITS MAXIMUM DRY DENSITY.

HOWEVER, GRANULAR BACKFILL MAY BE PLACED IN 24 INCH LIFTS PROVIDED EACH LAYER IS COMPACTED BY A COMBINATION OF SATURATION AND MECHANICAL MEANS TO AT LEAST 95% OF ITS MAXIMUM DENSITY.

IF ANY PORTION OF THE TRENCH AREA IS NEARER THAN 5'-0" FROM THE EDGE OF THE ROADWAY SURFACE, THE ENTIRE TRENCH MUST BE BACKFILLED WITH GRANULAR MATERIAL.

* THIS COMPACTION PROCEDURE IS NOT REQUIRED FOR UNIMPROVED AREA OR WHERE PROBLEMS RELATED TO TRENCH SETTLEMENT IS NEGLIGIBLE.

ALL SEEDING AND SODDING SHALL CONFORM TO THE LATEST EDITION OF THE ISHC STANDARD SPECIFICATIONS.

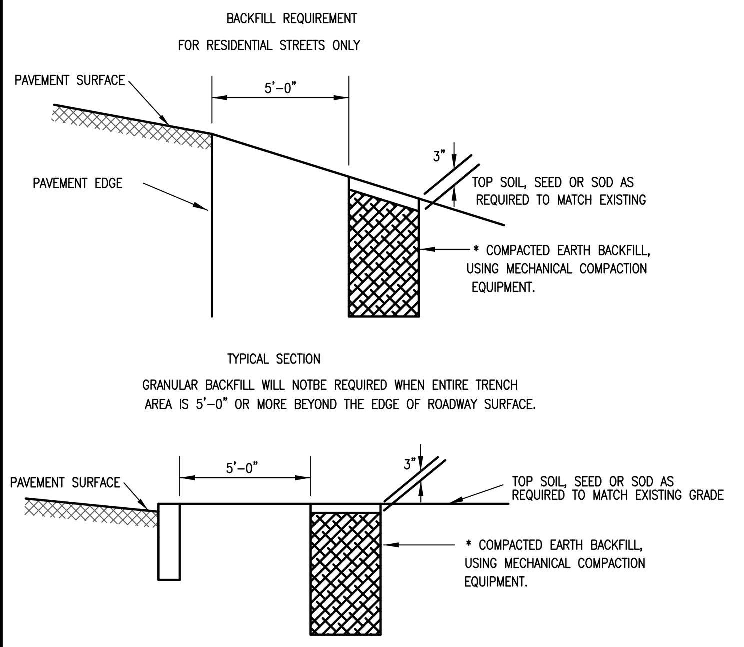

STANDARD FULL DEPTH
GRANULAR BACKFILL DETAILS

GENERAL NOTES FOR CURB AND GUTTER

WHERE SIDEWALK IS CONSTRUCTED IMMEDIATELY ADJACENT TO CURB, THE SURFACE OF THE SIDEWALK SHALL BE CONSTRUCTED 1/2" HIGHER THAN THE TOP OF THE CURB.

TRANSVERSE JOINTS SHALL BE CUT WITH A JOINTER HAVING A RADIUS OF 1/4" OF SPACING AS INDICATED OR DIRECTED.

COST OF TRANSVERSE PREFORMED JOINT FILLER TO BE INCLUDED IN CONTRACT PRICE FOR "CONCRETE SIDEWALK".

* COMPACTED SUBGRADE – THE UPPER 6 INCHES SHALL COMPLY WITH THE DENSITY REQUIREMENTS OF THE CONTRACT IMMEDIATELY PRIOR TO PLACING THE MATERIAL THEREON. ALL SOFT YIELDING OR OTHER UNSUITABLE MATERIAL, WHICH CANNOT BE COMPACTED SATISFACTORILY, SHALL BE REMOVED. ALL ROCK ENCOUNTERED SHALL BE REMOVED OR BROKEN OFF AT LEAST SIX (6) INCHES BELOW THE SUBGRADE SURFACE. ANY HOLES OR DEPRESSIONS RESULTING FROM THE REMOVAL OF THE UNSUITABLE MATERIAL, SHALL BE FILLED WITH SATISFACTORY MATERIAL AND COMPACTED TO CONFORM WITH THE SURROUNDING SUBGRADE SURFACE.

** WHERE SIDEWALK IS CONSTRUCTED ADJACENT TO CURB, THE SPACE BEHIND THE NEW CURB SHALL BE FILLED WITH GRANULAR MATERIAL TO THE REQUIRED ELEVATION AND COMPACTED IN LAYERS NOT TO EXCEED 4".

*** WHERE SIDEWALK IS NOT CONSTRUCTED ADJACENT TO THE CURB, THE SPACE BEHIND THE CURB SHALL BE FILLED WITH SUITABLE MATERIAL TO THE REQUIRED ELEVATION AND COMPACTED IN LAYERS NOT TO EXCEED 4"

**** WHEN BUILT IN CONJUNCTION WITH CONCRETE PAVEMENT EXPANSION AND CONTRACTION JOINTS SHOULD BE PLACED AT THE SAME LOCATIONS AS IN THE PAVEMENT SLAB. THE CURB AND GUTTER SHOULD BE TIED TO THE PAVEMENT BY 1/2" ROUND DEFORMED BARS AT ABOUT 3 FOOT INTERVALS. IF NO CONCRETE PAVEMENT IS BEING BUILT, AT THE TIME, THE CURB IS CONSTRUCTED. EXPANSION JOINTS SHOULD BE PLACED AT THE ENDS OF ALL RETURNS AND AT INTERVALS NOT TO EXCEED 100 FEET. CONTRACTION JOINTS SHOULD BE INSTALLED AT 20 FOOT SPACING.

GENERAL NOTES:

1. WHEN THE INTERSECTION IS NOT SIGNALIZED, SIDEWALK RAMPS SHALL BE PLACED ON THE RESIDENTIAL STREET SIDE ONLY. WHEN INTERSECTION IS SIGNALIZED, SIDEWALK RAMPS SHALL BE PLACED ON BOTH RESIDENTIAL STREET AND ARTERIAL STREET SIDE.
2. CURB CUT RAMPS ARE TO BE LOCATED AS SHOWN ON THE PLANS OR AS DIRECTED.
3. RAMPS SHALL BE PROVIDED AT ALL CORNERS OF STREET INTERSECTIONS WHERE THERE IS EXISTING OR PROPOSED SIDEWALK AND CURB. RAMPS SHALL ALSO BE PROVIDED AT WALK LOCATIONS IN MID-BLOCK IN THE VICINITIES OF HOSPITALS, MEDICAL CENTERS, AND ATHLETIC STADIUMS.
4. SURFACE TEXTURE OF THE RAMP SHALL BE THAT OBTAINED BY A COURSE BROOMING, TRANSVERSE TO THE SLOPE OF THE RAMP.
5. SIDEWALKS SHALL BE RAMPED WHERE THE DRIVEWAY CURB IS EXTENDED ACROSS THE WALK.
6. CARE SHALL BE TAKEN TO ASSURE A UNIFORM GRADE ON ALL RAMPS WITH NO BREAKS IN GRADE.
7. DRAINAGE STRUCTURES SHALL NOT BE PLACED IN LINE WITH RAMPS.EXCEPT WHERE EXISTING DRAINAGE STRUCTURES ARE BEING UTILIZED IN THE NEW CONSTRUCTION, LOCATION OF THE RAMP SHOULD TAKE PRECEDENCE OVER LOCATION OF DRAINAGE STRUCTURE.
8. THE NORMAL GUTTER LINE PROFILE SHALL BE MAINTAINED THROUGH THE AREA OF THE RAMP.
9. EXPANSION JOINT FOR THE RAMP SHALL BE A MAXIMUM 1/2" WIDE. THE TOP OF THE JOINT FILLER FOR RAMP TYPES SHALL BE FLUSH WITH ADJACENT CONCRETE.
10. CROSSWALK AND STOP LINE MARKINGS, IF USED, SHALL BE SO LOCATED AS TO STOP TRAFFIC SHORT OF RAMP CROSSINGS.
11. SLOPE OF RAMP MAY BE MODIFIED WHEN FIELD CONDITIONS WARRANT AND WHEN APPROVED BY THE DEPARTMENT OF TRANSPORTATION.

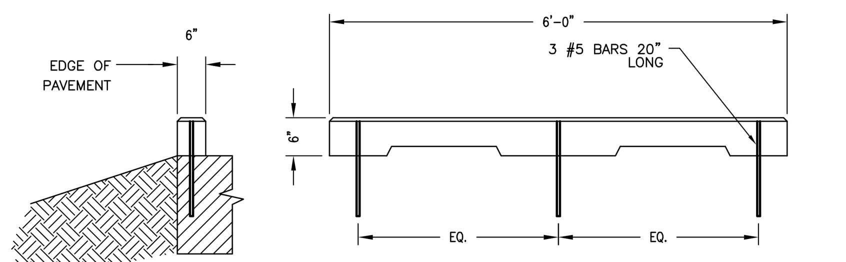

CONCRETE PARKING BUMPER

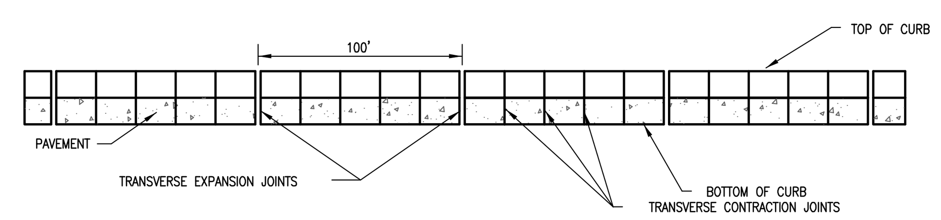

CURB JOINTS

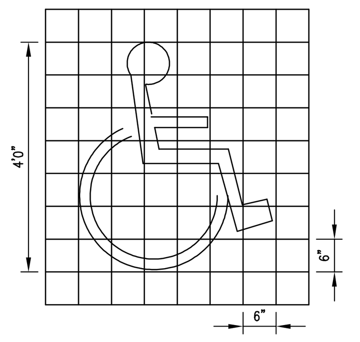

HANDICAP PAVEMENT MARKING DETAIL

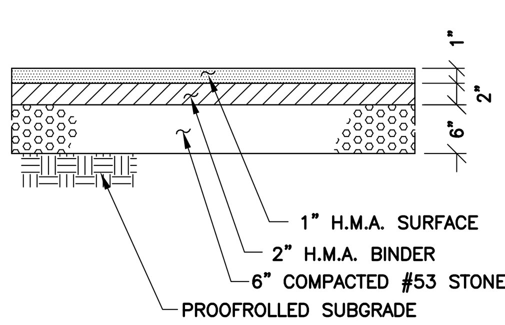

ASPHALT PAVEMENT DETAIL

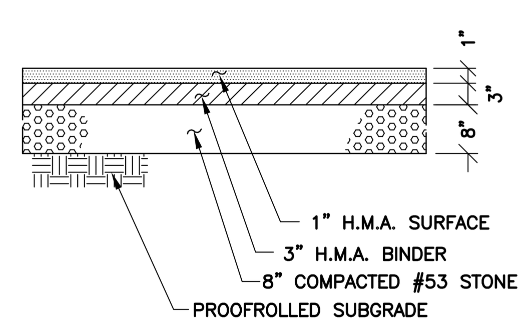

HEAVY DUTY ASPHALT PAVEMENT DETAIL

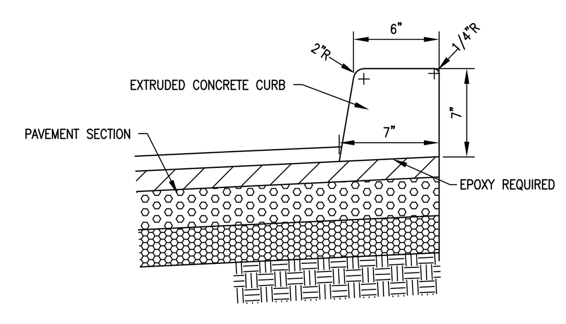

EXTRUDED CONCRETE CURB

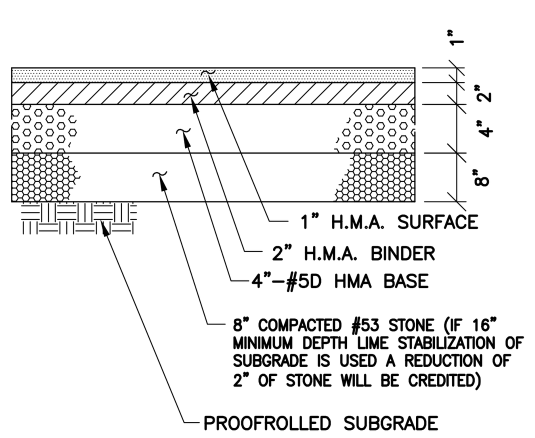

RIGHT-OF-WAY ASPHALT PAVEMENT DETAIL

NOTE:
ALL SUBGRADE AND STONE BASE MUST PASS A PROOF ROLL TEST AS REQUIRED BY CITY ENGINEER

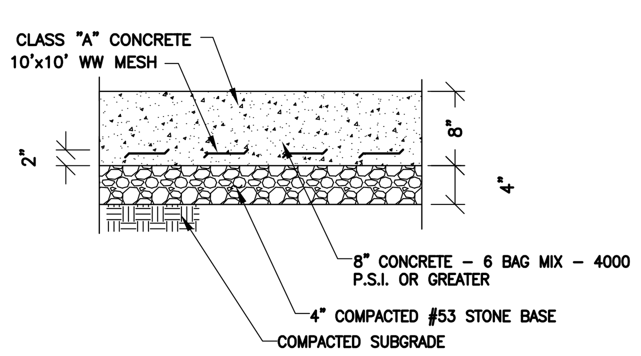

HEAVY DUTY CONCRETE TRUCK PAD SECTION

NOTES:
⑥ SEE STANDARD DRAWING E 604-SWCR-02 FOR GROOVE DETAILS.
⑦ SEE STANDARD DRAWING E 604-SWCR-02 FOR DETAILS OF THE DETECTABLE WARNING SURFACE
⑧ SEE STANDARD DRAWING E 604-SWCR-02 FOR ALTERNATE CURB CONSTRUCTION
⑨ CURB OPTIONAL SHALL BE USED WHEN NECESSARY BASED ON FIELD CONDITIONS
10. SEE STANDARD DRAWING E 604-SWCR-03 FOR TYPICAL RAMP CONSTRUCTION DETAILS.
11. SEE STANDARD DRAWINGS E 604-SWCR-01 AND -02 FOR LOCATION PLAN AND GENERAL NOTES RESPECTIVELY.

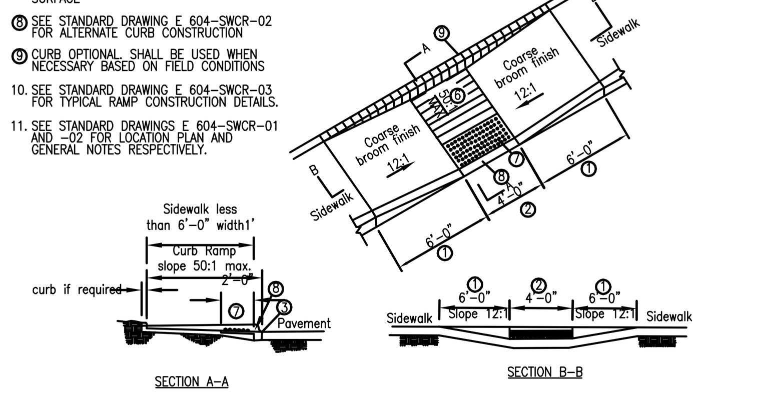

SIDEWALK RAMP DETAIL (INDOT TYPE 'K')

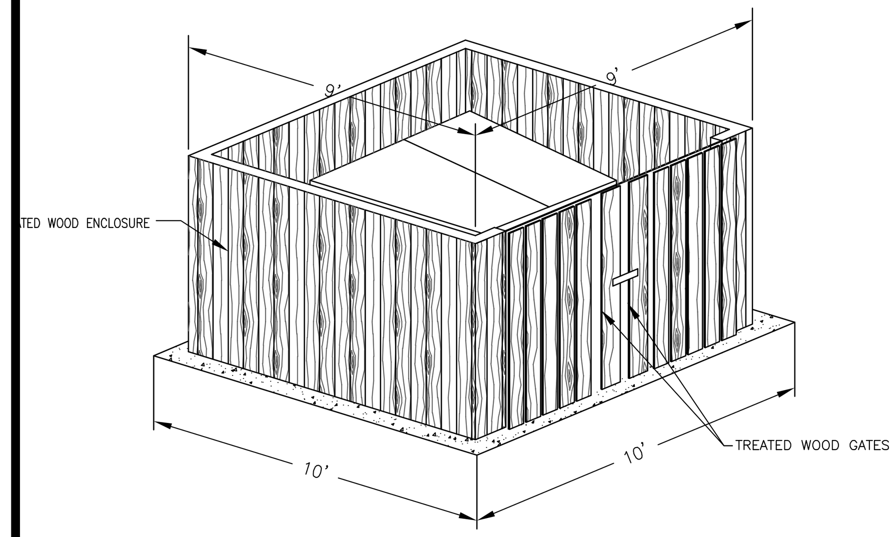

DUMPSTER ENCLOSURE DETAIL

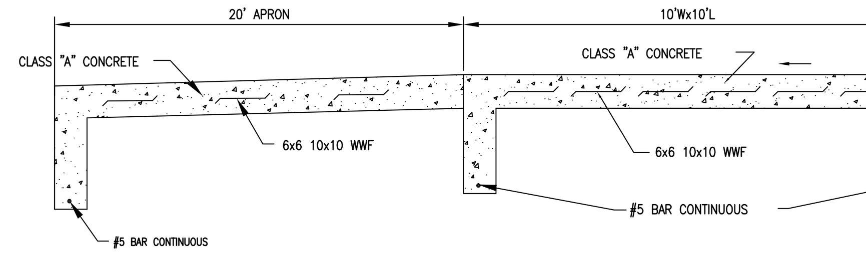

DUMPSTER PAD

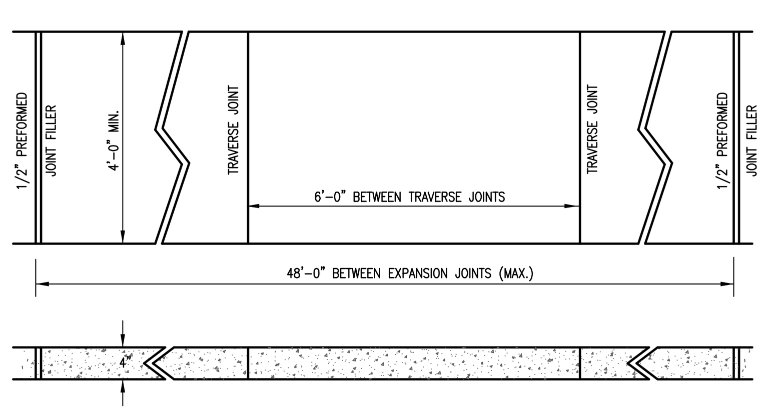

CONCRETE SIDEWALK

STORM SEWER DETAILS

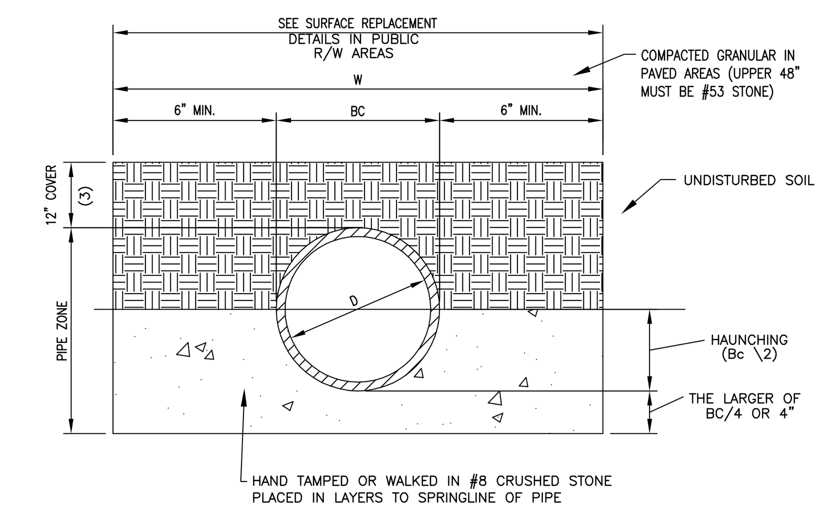

FIRST CLASS PIPE LAYING METHOD FOR:
RIGID CONDUITS (RCP & CMP)

W = MAXIMUM ALLOWABLE TRENCH WIDTH FOR PIPE AS PER ASTM NOT TO EXCEED FOUR (4) FEET OR 6" THROUGH 24" PIPE NOR SIX (6) FEET FOR 27" THROUGH 48" PIPE
D = PIPE DIAMETER (INTERNAL)
Bc= PIPE DIAMETER (EXTERNAL)

NOTES
1. BEDDING STOPS AT SPINGLINE OF THE PIPE. BACKFILLING ABOVE THIS POINT SHALL BE IN ACCORDANCE WITH THE SPECIFICATIONS.
2. WORK FALLING UNDER JURISDICTION OF THE INDIANA STATE HIGHWAY COMMISSION SHALL UTILIZE COMPACTED GRANULAR BACKFILL MATERIAL FOR INITIAL AND FINAL BACKFILL ANYWHERE WITHIN 12 FEET OF THE EDGE OF PAVEMENT. OTHERWISE, COMPACTED GRANULAR BACKFILL MATERIAL SHALL ONLY BE USED UNDER PAVEMENT SURFACES OR OTHER SPECIFICALLY DESIGNATED AREAS.
3. GRANULAR FILL IN PAVED AREAS

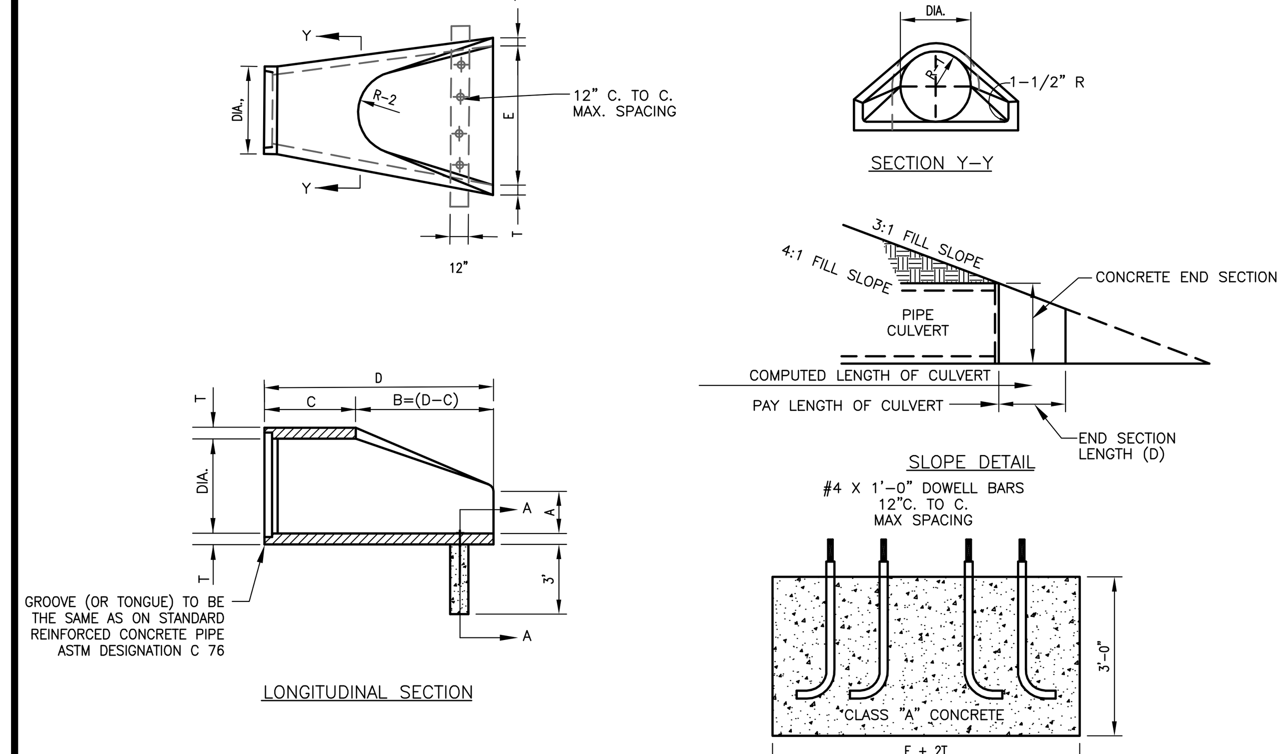

NOTES:
CONCRETE IN THIS SECTION SHALL BE THE SAME GRADE AND STRENGTH AS SPECIFIED FOR REINFORCED CONCRETE PIPE, A.S.T.M. DESIGNATION C-76 CLASS 11 (AS SET OUT IN STANDARD SPECIFICATIONS).
REINFORCEMENT IN THE "C" PORTION SHALL BE THE SAME AS SPECIFIED FOR THE REINFORCED CONCRETE, A.S.T.M. DESIGNATION C-76 CLASS II FOR THE SIZE OF CONNECTION PIPE.
REINFORCEMENT IN THE "B" PORTION SHALL HAVE A CROSS SECTIONAL AREA EQUAL TO THAT OF ONE LAYER OF STEEL IN THE "C" PORTION.
THE END OF THE PIPE CULVERT SHALL BE PLACED IN THE CONCRETE END SECTION SO THAT THE FLOW LINES ARE FLUSH. THE JOINT SHALL BE COMPLETELY FILLED WITH MORTAR.
IN 3:1 OR 4:1 FILL SLOPE, CHANGE TO THE SLOPE OF THE END SECTION IN A SMOOTH, PLEASING TRANSITION APPROXIMATELY 10'-0" IN LENGTH.
VARIATION IN DIMENSIONS – THE THICKNESS OF THE CONCRETE, THE POSITIONS OF STEEL, AND THE INTERNAL DIAMETER OF THE PIPE SHALL CONFORM WITH THE VARIATIONS IN DIMENSIONS AS PROVIDED IN THE SPECIFICATIONS FOR REINFORCED CONCRETE CULVERT, STORM DRAIN, AND SEWER PIPE, A.S.T.M. DESIGNATION C-76
CONCRETE PIPE TOE ANCHORS SHALL BE REQUIRED ON ALL CONCRETE PIPE END SECTIONS.

DIA.	WALL	WT. SEC.	A	B	C	D	E	R-1	R-2	SKIRT
12	2	530	4	24	48 7/8	72 7/8	24	10 1/16	9	3 1/2
15	2 1/4	740	6	27	46	73	30	12 1/2	11	3 1/2
18	2 1/2	990	9	27	46	73	36	15 1/2	12	4

PRECAST CONCRETE END SECTION

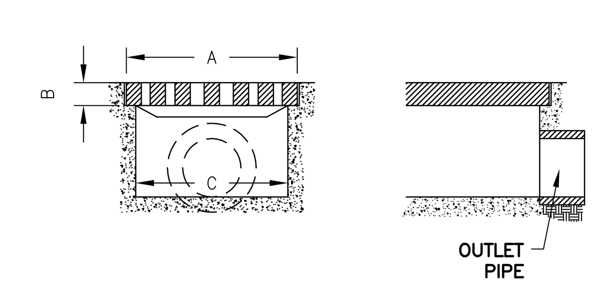

CATALOG NO.	TYPE	DIMENSIONS IN INCHES A	B	C
STANDARD LIGHT DUTY				
R-4990-AX	TYPE A	8	1 1/2	6
R-4990-CX	TYPE A	12	1 1/2	10
R-4990-DX	TYPE A	14	1 1/2	12

R-4990 TRENCH FRAME W/ COVER

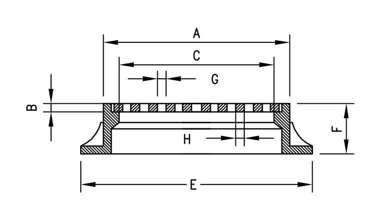

CATALOG NO.	A	B	C	E	F	G	H
R-3404	21½ x 21½	1½	20 1/8x20 1/8	30 5/8x30 5/8	5 1/8	2 x 2	15/16
R-3405	23 5/8x23 5/8	1½	22 x 22	32 3/4x32 3/4	6	2 1/8x2 1/8	1
R-3405-A•	23 7/8x23 7/8	2	22 x 22	32 1/8x32 1/8	6 1/8	2¼x2¼	1 7/16
R-3405-B*	23 7/8x23 7/8	2	22 x 22	32 1/8x29	6 1/8	2¼x2¼	1 7/16

* SAME AS R-3405-A EXCEPT BASE FLANGE ON 3 SIDES.
• ALSO AVAILABLE WITH TYPE "L" GRATE. ORDER AS R-3588-L.

HEAVY DUTY

R-3404-5 GUTTER INLET FRAMES AND GRATES

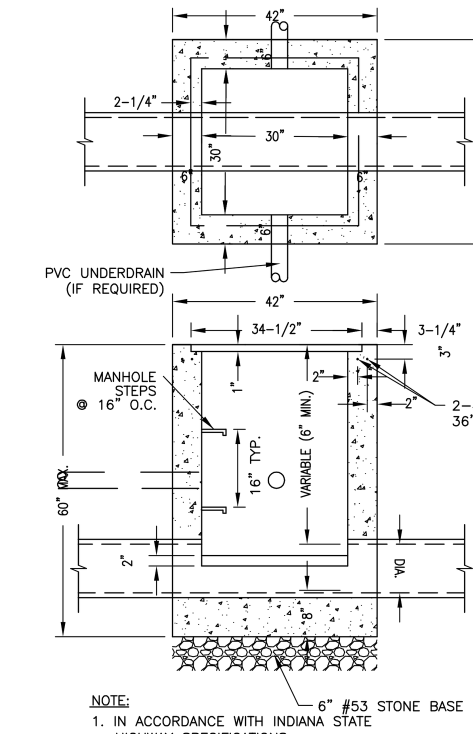

NOTE:
1. IN ACCORDANCE WITH INDIANA STATE HIGHWAY SPECIFICATIONS.
2. MINIMUM CONCRETE COMPRESSIVE STRENGTH 4000 P.S.I.
3. PRECAST ADJUSTING SECTIONS AVAILABLE.

INLET TYPE "F"

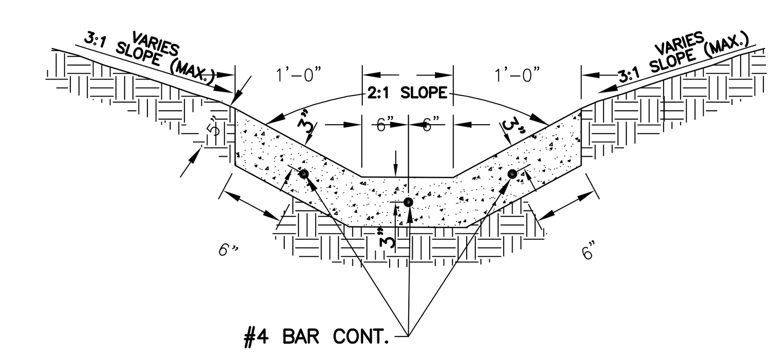

CONCRETE PAVED SWALE

SANITARY SEWER DETAILS

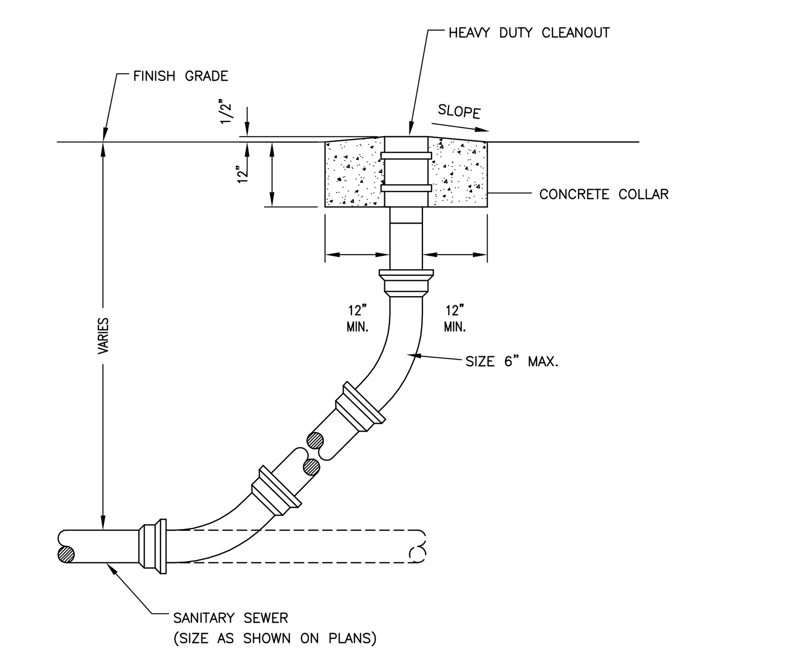

EXTERIOR CLEANOUT

A MINIMUM 4" DIA. PIPE CLEANOUT SHALL BE INSTALLED WITHIN THREE (3) FEET OF OUTSIDE BUILDING WALL. A PLUG SPECIFIED BY THE PIPE MANUFACTURER SHALL BE USED TO ENSURE 100% WATERTIGHTNESS.

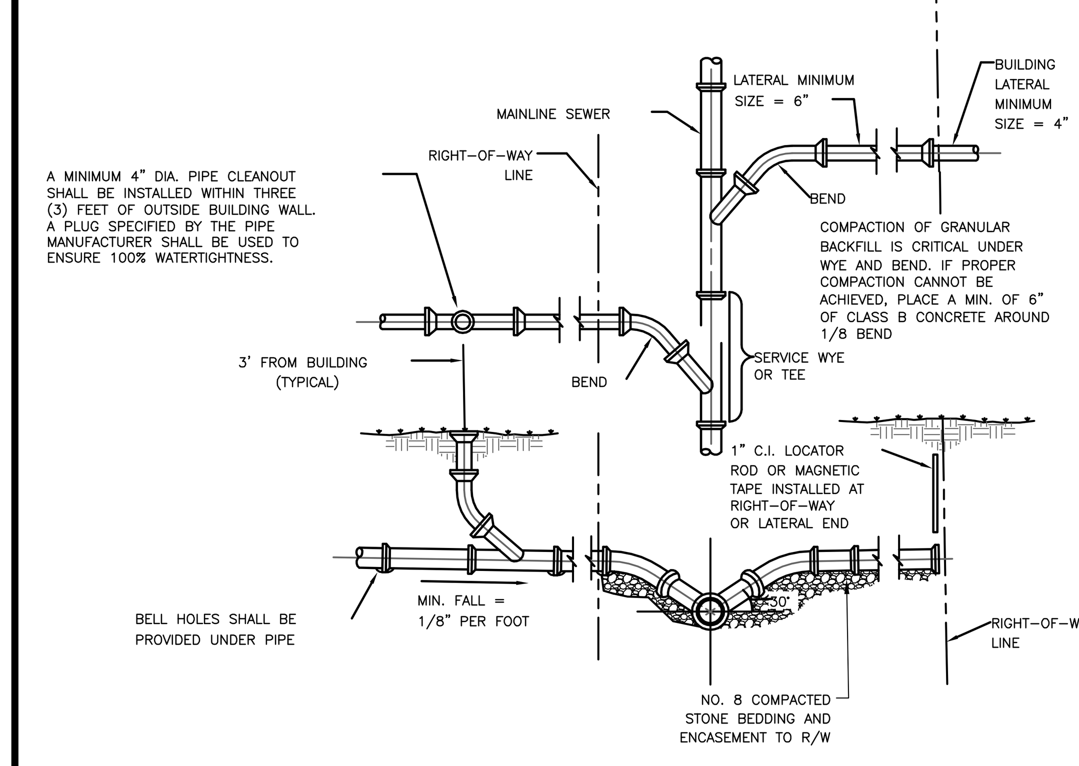

SERVICE CONNECTION FOR SHALLOW SEWERS
(LESS THAN 15' DEEP)

SYMBOL	REVISION	DATE

SCALE NONE | DRAWN JPH | CHECKED JKS | CERTIFIED JKS

PROJECT
COMMERCE BUSINESS PARK
BUILDING #1
CITY OF FRANKLIN, JOHNSON COUNTY, INDIANA

TITLE
SITE DETAILS

PROJECTS *plus*
GREENWOOD SURVEYING COMPANY
CIVIL ENGINEERING – LAND SURVEYING
LAND PLANNING – CONSTRUCTION MANAGEMENT
2555 Fairview Place Suite "A" – Greenwood, Indiana 46142
(317)-882-5003

SEAL
JEFFERY K. SMITH REGISTERED No. 19419 STATE OF INDIANA PROFESSIONAL ENGINEER
7/18/13

JOB NUMBER 13011
SHEET 9
OF 10 SHEETS
DATE JULY 18, 2013

SITE WORK GENERAL NOTES AND SPECIFICATIONS

GENERAL:
WHEREVER A CONFLICT OR DEFICIENCY OCCURS BETWEEN THE CONSTRUCTION STANDARDS AND SPECIFICATIONS ADOPTED BY THE JOHNSON COUNTY PLANNING AND HIGHWAY DEPARTMENTS. THE HIGHER OR MORE RESTRICTIVE STANDARD OR SPECIFICATION SHALL APPLY.

REFERENCE MATERIAL:

SUBDIVISION CONTROL AND LAND DEVELOPMENT ORDINANCE CHAPTER 102 OF CITY OF FRANKLIN AS REVISED AND CURRENT I.N.D.O.T. STANDARD SPECIFICATIONS

A. NOTICES AND PERMITS
1. THE CONTRACTOR SHALL BE RESPONSIBLE FOR OBTAINING OR VERIFYING THAT ALL PERMITS AND APPROVALS ARE OBTAINED FROM THE RESPECTIVE CITY, COUNTY AND STATE AGENCIES PRIOR TO STARTING CONSTRUCTION.
2. IT SHALL BE THE CONTRACTORS RESPONSIBILITY TO DETERMINE THE EXACT LOCATION OF ALL EXISTING UTILITIES IN THE VICINITY OF THE CONSTRUCTION AREA PRIOR TO STARTING ANY CONSTRUCTION.
3. IT SHALL BE THE CONTRACTORS RESPONSIBILITY FOR NOTIFICATION AND COORDINATION OF ALL CONSTRUCTION WITH THE RESPECTIVE UTILITY COMPANIES, PRIOR TO STARTING ANY CONSTRUCTION.
4. IT SHALL BE THE RESPONSIBILITY OF THE DEVELOPER AND CONTRACTOR TO MAINTAIN QUALITY CONTROL THROUGHOUT THE PROJECT; FAILURE TO DO SO MAY RESULT IN REMOVAL AND REPLACEMENT OF THE DEFECTIVE WORK. IT IS RECOMMENDED THAT THE DEVELOPER HAVE A QUALIFIED INSPECTOR ON THE JOB SITE AT ALL TIMES DURING CONSTRUCTION.
5. IT IS ESSENTIAL THAT THE WORK TO BE DONE IN CONJUNCTION WITH THIS PROJECT SHALL BE INSTALLED ACCORDING TO THESE SPECIFICATIONS. THE ENGINEER WILL BE REQUIRED TO CERTIFY TO CERTAIN PORTIONS OF THIS PROJECT UPON COMPLETION. THEREFORE, IT IS NECESSARY TO OBTAIN APPROVAL AND ACCEPTANCE BY THE JOHNSON COUNTY PLANNING AND HIGHWAY DEPT. THAT CONSTRUCTION WAS DONE IN COMPLIANCE WITH THESE PLANS AND SPECIFICATIONS.

B. CLEARING AND GRUBBING
1. CLEARING AND GRUBBING SHALL CONSIST OF CUTTING, REMOVAL AND SATISFACTORY DISPOSAL OF ALL TREES, DOWN TIMBER, BRUSH, PROJECTING ROOTS, STUMPS, RUBBISH, BOULDERS, BROKEN CONCRETE, FENCING (AS DESIGNATED) AND OTHER MATERIAL ON THE PROJECT SITE AND WITHIN THE BOUNDARY AS SHOWN ON THE CONSTRUCTION DOCUMENTS AND/OR AS DESIGNATED BY "CONSTRUCTION LIMITS".
2. SPECIAL CARE SHALL BE TAKEN TO INSURE THAT TREES TO BE LEFT REMAINING IN THE PROJECT AREA SHALL NOT RECEIVE LIMB, BARK OR ROOT INJURIES. WHEN SUCH INJURIES OCCUR, ALL ROUGH EDGES OF SCARRED AREAS SHALL BE REMOVED IN ACCORDANCE WITH ACCEPTED HORTICULTURAL PRACTICE AND THE SCARS COATED THOROUGHLY WITH AN ASPHALTIC BASE TREE PAINT.
3. ALL "UNSUITABLE MATERIAL" FROM CLEARING OPERATIONS STATED IN ITEM B-1 SHALL BE REMOVED TO DISPOSAL AREA(S) OFF OF THE PROJECT SITE.
4. MATERIALS SHALL NOT BE DISPOSED OF BY BURNING UNLESS APPROVED BY THE LOCAL FIRE MARSHAL.

C. TREE REMOVAL AND PROTECTION
1. TREES SHALL BE REMOVED FROM THE PROJECT SITE ONLY WHERE THE AREA IS TO BE OCCUPIED BY ROAD AND SURFACED AREAS IN ACCORDANCE WITH SPECIFICATIONS OF THE CITY OF FRANKLIN PLANNING AND HIGHWAY DEPARTMENTS.
2. TREES SHALL BE REMOVED FROM THE PROJECT SITE AS DIRECTED BY THE DEVELOPER AND SO DESIGNATED.
3. TREES SHALL BE REMOVED FROM THE PROJECT SITE WHERE THEY INTERFERE DIRECTLY WITH THE PLACEMENT OF STORM OR SANITARY SEWERS AND THAT SUCH EXCAVATION IS OR WILL BE FATAL TO SUCH ADJACENT TREES.
4. THE CONTRACTOR SHALL ENDEAVOR TO SAVE AND PROTECT TREES OF VALUE AND WORTH WHICH DO NOT IMPAIR CONSTRUCTION OF IMPROVEMENTS AS DESIGNATED. IN THE EVENT CUT OR FILL EXCEEDS 0.5 FOOT OVER THE ROOT AREA, THE DEVELOPER SHALL BE CONSULTED WITH RESPECT TO PROTECTIVE MEASURES TO BE TAKEN, IF ANY, TO PRESERVE SUCH TREES.
5. THE CONTRACTOR SHALL BE RESPONSIBLE FOR DETERMINING THE METHOD FOR PROTECTION OF TOPS, TRUNKS AND ROOTS OF EXISTING TREES ON THE PROJECT SITE THAT ARE TO REMAIN. EXISTING TREES SUBJECT TO CONSTRUCTION DAMAGE SHALL BE BOXED, FENCED OR OTHERWISE PROTECTED BEFORE ANY ADJACENT WORK IS STARTED. EARTH OR MATERIAL AND EQUIPMENT SHALL NOT BE STOCKPILED OR STORED WITHIN THE SPREAD OF BRANCHES. BRANCHES WHICH NEED TO BE REMOVED OR ARE BROKEN SHALL BE NEATLY TRIMMED AND SCARS SHALL BE COVERED WITH TREE PAINT.

D. STRIPPING OF TOPSOIL
1. THE CONTRACTOR SHALL VERIFY THAT ALL TOPSOIL HAS BEEN REMOVED IN THE AREAS TO BE OCCUPIED BY ROAD, WALKS AND DESIGNATED BUILDING AREAS. TOPSOIL SHALL BE REMOVED TO A DEPTH OF SIX (6) INCHES OR DEEPER, IF NECESSARY, TO REMOVE VEGETABLE MATTER WHERE REQUIRED.
2. TOPSOIL SHALL BE KEPT SEPARATED FROM SUITABLE FILL MATERIALS AND SHALL NOT BE USED AS FILL UNDER PAVEMENT AND/OR BUILDING AREAS.
3. TOPSOIL SHALL BE STORED AT A LOCATION WHERE IT DOES NOT INTERFERE WITH CONSTRUCTION OPERATIONS. EXCESS TOPSOIL SHALL BE USED FOR FINISH GRADING OF SITE, OF DRAINAGE SWALES, YARDS OF NEW RESIDENCES, BUFFER STRIPS, ETC.
4. TOPSOIL SHALL BE REASONABLY FREE FROM SUBSOILS DEBRIS AND STONES.

E. GRADING
1. THE CONTRACTOR SHALL PERFORM ALL GRADING OPERATIONS TO BRING SUBGRADES, AFTER FINAL COMPACTION, TO THE REQUIRED GRADES AND SECTIONS FOR SITE IMPROVEMENT.
2. SUBGRADE SHALL BE PROOF ROLLED WITH SUITABLE EQUIPMENT AND ALL SPONGY AND OTHERWISE UNSUITABLE MATERIAL SHALL BE REMOVED AND REPLACED WITH SUITABLE MATERIAL.
3. SUBGRADE SHALL BE PREPARED IN COMPLIANCE WITH SECTION 207 OF THE CURRENT I.N.D.O.T. STANDARD SPECIFICATIONS, FOR ALL AREAS OF STREET CONSTRUCTION.
4. ALL FILL MATERIAL SHALL BE FORMED FROM SOIL FREE OF DELETERIOUS MATERIAL. PRIOR TO PLACEMENT OF FILL A SAMPLE OF THE PROPOSED FILL MATERIAL SHOULD BE SUBMITTED TO A SOILS ENGINEER FOR HIS APPROVAL AND COPIES OF THE SOLID PROCTORS SHALL BE SUBMITTED TO PROJECTS PLUS.
5. ALL FILLS IN EXCESS OF TWO (2) FEET SHALL BE CONSIDERED AS STRUCTURAL FILLS AND AS SUCH SHALL BE COMPACTED IN SIX INCH LIFTS WITH COMPACTION TESTS FOR EACH LIFT. COMPACTION FOR ALL STRUCTURAL FILL AREAS SHALL BE 95 PERCENT STANDARD PROCTOR AND TEST RESULTS SHALL BE SUBMITTED TO PROJECTS PLUS.
6. ALL FILL MATERIAL IN AREAS OUTSIDE OF BUILDING AND PAVEMENT AREAS SHALL BE COMPACTED LIGHTLY AND PROTECTED FROM EROSION BY ONE OR MORE OF THE METHODS OF ITEM G. ALL AREAS WHERE BUILDING AND PAVEMENT CONSTRUCTION IS FEASIBLE SHALL NOT HAVE UNSUITABLE MATERIAL PLACED IN THAT LOCATION, AND FILL SHALL BE COMPACTED TO 95% STANDARD PROCTOR OR BETTER.

F. STANDARD SANITARY SEWER CONSTRUCTION
1. CURRENT CITY OF FRANKLIN SPECIFICATIONS SHALL PREVAIL AS TO MATERIALS AND METHODS OF CONSTRUCTION.
2. THE CONTRACTOR SHALL BE RESPONSIBLE FOR OBTAINING OR VERIFYING ALL PERMITS FOR ALL OR PORTIONS OF THIS PROJECT PRIOR TO STARTING ANY CONSTRUCTION.
3. SANITARY SEWERS SHALL BE INSTALLED IN ACCORDANCE WITH 327 IAC 3-6 TECHNICAL STANDARDS FOR SANITARY COLLECTION SYSTEMS, AND DEPARTMENT OF ENVIRONMENTAL MANAGEMENT AND PERMITS SHALL BE OBTAINED PRIOR TO STARTING AND CONSTRUCTION.
4. SANITARY SEWERS SHOWN ON THE CONSTRUCTION PLANS WERE DESIGNED WITH POLY-VINYL CHLORIDE PIPE IN ACCORDANCE WITH A.S.T.M. D-3034, S.D.R.-35 FOR PIPES THAT ARE 15 INCH IN DIAMETER OR LESS AND ARE LESS THAN 15 FEET DEEP. PVC PIPE AND FITTINGS THAT ARE GREATER THAN 18 INCH IN DIAMETER SHALL CONFORM TO A.S.T.M. F-679. ALL SANITARY PIPES GREATER THAN 15 FEET DEEP SHALL BE RATED AS HEAVY WALL S.D.R.-26. ALL FITTINGS REGARDLESS OF DEPTH SHALL BE NOTED AS HEAVY WALL S.D.R.-26. THE FORCEMAIN SHALL BE AWWA C-900, DR14.
5. NOT USED
6. SANITARY MANHOLES SHALL BE PRECAST CONCRETE IN ACCORDANCE WITH A.S.T.M. C-478. ALL JOINTS AND LIFTING HOLES ON THE EXTERIOR, SHALL BE SEALED WITH NON-SHRINK GROUT. INTERIOR LIFT HOLES PROHIBITED.
7. CASTINGS SHALL BE OF TYPE AND KIND AS SHOWN ON THE DETAIL SHEET.
8. PLASTIC SANITARY SEWERS SHALL BE MARKED FOR EASY IDENTIFICATION.
9. WATER AND SEWER LINE CROSSINGS AND SEPARATIONS SHALL BE IN ACCORDANCE WITH TEN STATES STANDARDS AND LOCAL CODES.
   a. WHERE WATER LINES AND SEWER LINES CROSS AND THE WATER LINE CANNOT BE PLACED ABOVE THE SEWER LINE A MINIMUM OF 18" WITH A MINIMUM COVER OF 48", THE SEWER LINE SHALL BE CONSTRUCTED OF WATERWORKS GRADE CAST IRON PIPE WITH MECHANICAL JOINTS.
   b. WHERE WATER LINES AND SANITARY SEWER LINES RUN PARALLEL WITH ONE ANOTHER, A MINIMUM OF 10' HORIZONTAL SEPARATION SHALL BE MAINTAINED.
10. ALL FUTURE SEWER INSTALLATION, EITHER CONNECTED TO OR EXTENDED FROM THIS SYSTEM, SHALL BE CONSTRUCTED IN ACCORDANCE WITH THESE SPECIFICATIONS.
11. NO ROOF DRAINS, FOOTING DRAINS, AND/OR SURFACE WATER DRAINS MAY BE CONNECTED TO THE SANITARY SEWER SYSTEMS, INCLUDING TEMPORARY CONNECTIONS DURING CONSTRUCTION, INCLUDING SUMP PUMPS, ARE PROHIBITED.
12. BUILDINGS SHALL BE SERVICED BY A 6" MINIMUM SANITARY SEWER LATERAL. THE ENDS SHALL BE PLUGGED AND SEALED WITH A WATER TIGHT PLASTIC DISC. WYES ARE TO BE TILTED UP TO 45 DEGREES FROM THE HORIZONTAL, WITH SUITABLE FITTINGS FOR ALL CHANGES IN DIRECTION. IF 6" PVC LATERALS ARE USED, THEY SHALL BE IN ACCORDANCE WITH A.S.T.M. D-3034 AND A.S.T.M. D-2321 FOR PROPER INSTALLATION. MAGNETIC TAPE LOCATOR SHALL BE PLACED AT THE END OF EACH LATERAL TO IDENTIFY THE LOCATION OF THE LATERAL.
13. THE CONTRACTOR SHALL PROVIDE PROJECTS PLUS WITH "AS-BUILT" LATERAL LOCATIONS.
14. MANHOLE SECTIONS SHALL HAVE "O" RINGS WHICH SHALL MEET A.S.T.M. C-433.
15. MANHOLE WATERSTOPS SHALL BE INSTALLED AT ALL CONNECTIONS TO MANHOLES, WHERE FLEXIBLE TYPE MANHOLE CONNECTIONS ARE NOT USED.
16. ALL PRECAST MANHOLES SHALL BE BEDDED ON A GRANULAR FOUNDATION.
17. THE CONTRACTOR SHALL REMOVE BY PUMPING OR OTHER SUITABLE METHODS ANY WATER WHICH MAY ACCUMULATE IN TRENCHES.
18. THE CONTRACTOR SHALL BE RESPONSIBLE FOR ALL TESTS FOR LEAKAGE, INFILTRATION AND DEFLECTION AS ESTABLISHED BY THE CITY OF FRANKLIN, I.D.E.M. AND THE STATE BOARD OF HEALTH, AND THE SANITARY SEWER CONTRACTOR SHALL BE RESPONSIBLE FOR PROVIDING CERTIFIED TESTS RESULTS TO THE ENGINEER. ANY PORTIONS NOT PASSING SAID TESTS FOR ACCEPTANCE SHALL BE REPAIRED OR REPLACED AT THE SANITARY SEWER CONTRACTORS EXPENSE, INCLUDING RE-EXCAVATION AND BACKFILL.

a. DEFLECTION TEST
1a. DEFLECTION TESTS SHALL BE PERFORMED ON ALL FLEXIBLE PIPE. THE TEST SHALL BE CONDUCTED AFTER THE FINAL BACKFILL HAS BEEN IN PLACE AT LEAST 30 DAYS TO PERMIT STABILIZATION OF THE SOIL-PIPE SYSTEM.

1b. NO PIPE SHALL EXCEED A DEFLECTION OF 5 PERCENT. IF DEFLECTION EXCEEDS 5 PERCENT, REPLACEMENT OR CORRECTION SHALL BE ACCOMPLISHED IN ACCORDANCE WITH REQUIREMENTS IN THE APPROVED SPECIFICATIONS.

1c. THE RIGID BALL OR MANDREL USED FOR THE DEFLECTION TEST SHALL HAVE A DIAMETER NOT LESS THAN 95 PERCENT OF THE BASE INSIDE DIAMETER OR AVERAGE INSIDE DIAMETER OF THE PIPE DEPENDING ON WHICH IS SPECIFIED IN THE ASTM SPECIFICATION, INCLUDING THE APPENDIX, TO WHICH THE PIPE IS MANUFACTURED. THE TEST SHALL BE PERFORMED WITHOUT MECHANICAL PULLING DEVICES.

b. AIR TEST
1a. THE AIR TEST SHALL, AS A MINIMUM, CONFORM TO THE TEST PROCEDURE DESCRIBED IN ASTM C-828 FOR CLAY PIPE, ASTM C 924 FOR CONCRETE PIPE, ASTM F-1417 FOR PLASTIC PIPE, AND FOR OTHER MATERIALS TEST PROCEDURES APPROVED

1b. FOR AIR TESTING, (TIME-PRESSURE DROP METHOD) EACH END OF THE SECTIONOF PIPE TO BE TESTED SHALL BE PLUGGED WITH AIR STOPPERS FURNISHED BY THE CONTRACTOR.AIR SHALL SLOWLY BE SUPPLIED TO THE PLUGGED PIPE INSTALLATION BY AN AIR COMPRESSOR, FURNISHED BY THE CONTRACTOR, UNTIL PRESSURE REACHES 4.0 P.S.I.. IF GROUNDWATER ELEVATION IS ABOVE INVERT OF SEWER BEING TESTED, AN ADDITIONAL 1.0 P.S.I. OF AIR PRESSURE SHALL BE ADDED FOR EACH 2.3 FEET OF WATER ABOVE THE INVERT OF THE SEWER. AT LEAST 2 MINUTES SHALL BE ALLOWED FOR THE AIR PRESSURE TO STABILIZE.

THE RATE OF AIR LOSS SHALL THEN BE DETERMINED BY MEASURING THE TIME INTERVAL REQUIRED FOR PRESSURE TO DECREASE FROM 3.5 TO 2.5 PSI. THE PRESSURE GAUGE AND STOP WATCH WILL BE FURNISHED BY THE OWNER.

1c. THE PIPELINE SHALL BE CONSIDERED ACCEPTABLE WHEN TESTED AT AN AVERAGE PRESSURE OF 3.0 PSI IF (1) THE TOTAL RATE OF AIR LOSS FROM ANY SECTION TESTED IN ITS ENTIRETY BETWEEN MANHOLE AND CLEANOUT STRUCTURE DOES NOT EXCEED 2.0 CFM, OR (2) THE SECTION UNDER TEST DOES NOT LOSE AIR AT A RATE GREATER THAN 0.0030 CFM PER SQUARE FOOT OF INTERNAL PIPE SURFACE.

1d. THE REQUIREMENTS OF THIS SPECIFICATION SHALL BE CONSIDERED SATISFIED IF THE TIME REQUIRED IN SECONDS FOR THE PRESSURE TO DECREASE FROM 3.5 TO 2.5 PSI IS NOT LESS THAN SHOWN IN THE "ALLOWABLE TIME TABLE".

ALLOWABLE TIME TABLE:

PIPE DIAMETER in.	MINIMUM TIME MINUS.	LENGTH FOR MINIMUM TIME FT.	TIME FOR LONGER LENGTHS	SPECIFICATION TIME FOR LENGTH (L) SHOWN, MIN;S							
				100 FT.	150 FT.	200 FT.	250 FT.	300 FT.	350 FT.	400 FT.	450 FT.
4	3:48	597	0.380	3:48	3:48	3:48	3:48	3:48	3:48	3:48	3:48
6	5:40	388	0.854	5:40	5:40	5:40	5:40	5:40	5:40	5:42	6:24
8	7:34	298	1.520	7:34	7:34	7:34	7:34	7:34	8:52	10:06	11:24
10	8:26	239	2.374	8:26	8:26	8:26	8:53	11:52	13:51	15:49	17:48
12	11:20	199	3.418	11:20	11:24	11:24	14:15	17:06	19:56	22:47	25:38
16	14:10	159	5.342	14:10	14:10	17:48	22:15	28:42	31:09	35:38	40:04
18	17:00	133	7.892	17:00	19:18	25:38	32:03	38:27	44:62	51:16	57:41
21	19:50	114	10.470	19:50	26:10	34:54	43:37	52:21	61:00	69:48	78:31
24	22:40	99	13.674	22:47	34:11	48:34	56:58	68:22	79:46	81:10	102:33
27	26:30	88	17.808	28:51	43:16	57:41	72:07	86:32	100:57	115:22	129:48
30	28:20	80	21.366	35:37	58:25	71:13	89:02	106:50	124:38	142:26	160:16
33	31:10	72	26.852	48:05	64:38	86:10	107:43	128:16	150:43	172:21	193:53
36	34:00	68	30.768	51:17	78:66	102:34	128:12	163:50	179:29	205:07	210:46

1e. FOR EXFILTRATION TEST, THE INLET END OF THE UPSTREAM AND DOWNSTREAM MANHOLES SHALL BE CLOSED WITH WATERTIGHT BULKHEADS. THEN THE SEWER AND THE UPSTREAM MANHOLE SHALL BE FILLED WITH WATER UNTIL THE ELEVATION OF WATER IN THE UPSTREAM MANHOLE IS TWO FEET HIGHER THAN THE TOP OF THE PIPE IN THE LINE BEING TESTED, OR TWO FEET ABOVE THE EXISTING GROUND WATER IN THE TRENCH, WHICHEVER IS THE HIGHER ELEVATION. THE EXFILTRATION WILL BE MEASURED BY DETERMINING THE AMOUNT OF WATER REQUIRED TO MAINTAIN THE INITIAL WATER ELEVATION FOR ONE HOUR FROM THE START OF THE TEST.

c. SANITARY MANHOLE VACUUM TESTING

ALL MANHOLE VACUUM TESTS SHALL BE CONDUCTED IN THE PRESENCE OF A REPRESENTATIVE OF THE CITY OF FRANKLIN. ALL MANHOLE TESTS SHALL BE IN ACCORDANCE WITH ASTMC 1244-93 STANDARD TEST METHOD FOR CONCRETE SEWER MANHOLES BY THE NEGATIVE AIR PRESSURE (VACUUM) TEST. CITY OF FRANKLIN MAY HAVE ADDITIONAL REQUIREMENTS.

THE VACUUM TEST EQUIPMENT SHALL CONSIST OF: INFLATABLE PLUGS FOR ALL INCOMING AND OUTGOING SEWER LINES; AN INFLATABLE TEST COLLAR TO SEAL THE MANHOLE AT THE MANHOLE FRAME; AND A VACUUM PUMP. A VACUUM GAUGE SHALL BE LOCATED IN-LINE BETWEEN THE TEST COLLAR AND THE PUMP TO ACCURATELY INDICATE THE VACUUM IN INCHES OF MERCURY WITHIN THE MANHOLE. THE VACUUM GAUGE SHALL HAVE A RANGE TO NO MORE THAN THIRTY (30) INCHES OF MERCURY, WITH SCALE MARKINGS OF NO GREATER THAN ONE-HALF (½) INCH OF MERCURY VACUUM AND AN ACCURACY TO WITHIN ± TWO PERCENT (2%) OF TRUE VACUUM.

THE VACUUM TEST SHALL BE CONDUCTED BY PLUGGING ALL INCOMING AND OUTGOING SEWER LINES IN THE MANHOLE AT A LOCATION BEYOND THE CONNECTION OF THE SEWER PIPE WITH THE MANHOLE. ALL PLUGS SHALL BE BLOCKED IN PLACE SO AS NOT TO MOVE DURING THE TEST. THE VACUUM TESTING COLLAR SHALL BE INFLATED IN THE FRAME IN ACCORDANCE WITH THE EQUIPMENT MANUFACTURER'S RECOMMENDATIONS. A VACUUM OF TEN (10) INCHES OF MERCURY SHALL BE DRAWN AND THE VACUUM PUMP TURNED OFF AND THE VALVE BETWEEN THE VACUUM PUMP AND THE VACUUM GAUGE SHALL BE TURNED OFF.

THE TIME PERIOD WHICH IS TAKEN FOR THE VACUUM TO FALL FROM TEN INCHES (10") OF MERCURY TO NINE INCHES (9") OF MERCURY SHALL BE DETERMINED. IF THE TIME TAKEN FOR THE VACUUM TO REDUCE THE TEN INCHES (10") OF MERCURY TO NINE INCHES (9") OF MERCURY IS LESS THAN THE TIME INDICATED IN THE FOLLOWING TABLE, THEN THE MANHOLE WORK SHALL BE CONSIDERED NOT ACCEPTABLE AND SHALL BE REJECTED. IF THE TIME IS EQUAL TO OR EXCEEDS THE TIME INDICATED BELOW, THE MANHOLE WORK SHALL BE ACCEPTED.

MANHOLE DEPTH (FT.)	TIME (SEC) DIAMETER= 48"	60"	72"
8	20	26	33
10	25	33	41
12	30	39	49
14	35	46	57
16	40	52	65
18	45	59	73
20	50	65	81
22	55	72	89
24	59	78	97
26	69	85	105
28	70	91	113
30	74	98	121
FOR EACH ADDITIONAL 2' ADD:	5	7	8

CONTRACTOR SHALL SUBMIT TO THE ENGINEER THE RESULTS OF EACH MANHOLE VACUUM TEST. SUCH REPORTS SHALL INCLUDE A DESCRIPTION OF THE LOCATION OF THE MANHOLE, THE TIME, DATE AND WEATHER OF THE TEST, A LIST OF ALL PERSONS PRESENT, THE DIAMETER AND DEPTH OF THE MANHOLE AND THE ALLOWABLE TEST RESULTS, AND THE ACTUAL TEST RESULTS.

ALL MANHOLES SHALL BE REPAIRED BY CONTRACTOR AND RETESTED AS DESCRIBED ABOVE UNTIL A SUCCESSFUL TEST IS MADE. AFTER EACH TEST, THE TEMPORARY PLUGS SHALL BE REMOVED.

18. PIPE SHALL BE LAID IN OPEN TRENCHES, EXCEPT WHEN CONDITIONS REQUIRE AND THE APPROPRIATE APPROVING AGENCIES GIVE WRITTEN PERMISSION FOR TUNNELING OR JACKING OF PIPE.
19. TRENCH SHALL BE OPENED SUFFICIENTLY AHEAD OF PIPE LAYING TO REVEAL OBSTRUCTIONS AND SHALL BE PROPERLY PROTECTED AND/OR BARRICADED WHEN LEFT UNATTENDED.
20. TRENCHES SHALL BE SHEETED AND BRACED AS NECESSARY TO PROTECT WORKMEN AND ADJACENT STRUCTURES. ALL TRENCHING SHALL BE DONE IN ACCORDANCE WITH I.O.S.H.A. STANDARDS TO PROTECT WORKMEN.
21. THE FLOW CHANNELS FOR THE SANITARY SEWER MANHOLES SHALL BE U-SHAPED WITH THE BENCHWALLS EXTENDING TO THE CROWN OF THE INCOMING AND OUTGOING PIPES. CHANGES IN SIZE AND GRADE SHALL BE MADE BY SMOOTH TRUE CURVES FOR ALL CONNECTING SEWERS AT EACH MANHOLE.
22. NUMBER 53 STONE BACKFILL SHALL BE REQUIRED UNDER ALL PAVEMENT AREAS AND WITHIN 5' OF THE EDGE OF PAVEMENT.
23. ALL TRENCHES UNDER PAVEMENT SHALL BE COMPACTED TO 95 PERCENT MODIFIED PROCTOR.
25. THE MINIMUM CELL CLASSIFICATION FOR P.V.C. SHALL BE 12454B OR C PER A.S.T.M. STANDARDS
24. ALL GRAVITY AND FORCEMAIN PIPE SHALL BE INSTALLED WITH BELL END OF THE PIPE AT THE UPSTREAM SIDE OF FLOW OR AT THE END IN WHICH THE FIRST RECEIVES THE FLOW.

25. ALL FORCEMAIN SHALL BE HYDROSTATICALLY TESTED. THE FORCEMAIN TEST SECTION SHALL BE SLOWLY FILLED WITH WATER AND PRESSURIZED TO A TEST PRESSURE 50 HIGHER THAN NORMAL OPERATING PRESSURE. THE TEST DURATION SHALL BE A MINIMUM OF TWO (2) HOURS. SUITABLE MEANS SHALL BE PROVIDED BY THE CONTRACTOR FOR DETERMINING WATER LOST BY LEAKAGE UNDER THE TEST PRESSURE. NO PIPE INSTALLATION WILL BE ACCEPTED UNTIL OR UNLESS THIS LEAKAGE IS LESS THEN TEN (10) GALLONS PER INCH OF PIPE DIAMETER PER MILE OF PIPE PER DAY, AT THE DESIGNATED TEST PRESSURE.

26. THE CITY OF FRANKLIN SHALL BE NOTIFIED IN ADVANCED OF ALL SANITARY SEWER TESTING.

G. EROSION PROTECTION DURING CONSTRUCTION
1. THE CONTRACTOR SHALL PROVIDE ADEQUATE EROSION PROTECTION MEASURES DURING AND AFTER CONSTRUCTION SUCH AS BUT NOT LIMITED TO:
   a. SILTATION BASINS
   b. SILT TRAPS
   c. STRAW BALE DAMS
   d. SOIL CEMENT
   e. MULCH AND SEEDING
   f. SOIL STABILIZATION FABRIC
   g. JUTE NETTING
2. SPECIFIC EROSION CONTROL MEASURES SHALL BE IMPLEMENTED AND INSTALLED PER THE EROSION CONTROL PLAN INCLUDED IN THESE CONSTRUCTION PLANS.
3. DETAILS AND PLACEMENT SPECIFICATIONS FOR THE ABOVE ITEMS ARE AVAILABLE ON REQUEST FROM THE ENGINEER.
4. ALL EROSION CONTROL PRACTICES SHALL BE IN ACCORDANCE WITH THE INDIANA STORM WATER QUALITY MANUAL DATED OCTOBER 2007 BY THE INDIANA DEPARTMENT OF ENVIRONMENTAL MANAGEMENT (IDEM).

H. STORM SEWER CONNECTION
1. STORM SEWER STRUCTURES SHALL COMPLY WITH CURRENT SPECIFICATIONS OF THE CITY OF FRANKLIN PLANNING AND HIGHWAY DEPARTMENTS ALL OTHER RESPONSIBLE AGENCIES IN RESPECT TO DESIGN AND QUALITY OF CONSTRUCTION.
2. ALL STORM SEWER CONSTRUCTION INSIDE PUBLIC RIGHT-OF-WAY, EITHER EXISTING OR TO BE DEDICATED, SHALL BE IN ACCORDANCE WITH CURRENT I.N.D.O.T. STANDARD SPECIFICATIONS
3. WHERE REINFORCED CONCRETE PIPE IS SHOWN ON THE CONSTRUCTION PLANS, IT SHALL BE IN ACCORDANCE WITH A.S.T.M. C-76 CLASS III WALL "C" UNLESS OTHERWISE SPECIFIED ON THE PLANS.
4. MANHOLES, CATCH BASINS AND INLETS SHALL BE PRECAST CONCRETE. USE OF BRICK OR BLOCK WILL NOT BE PERMITTED UNLESS AUTHORIZED IN WRITING BY THE ENGINEER AND APPROVED IN WRITING BY THE CITY OF FRANKLIN PLANNING AND HIGHWAY DEPARTMENTS DRAINAGE SECTION PRIOR TO CONSTRUCTION.
   a. IF THE CONTRACTOR ELECTS TO USE ALTERNATE PRECAST STRUCTURES, HE SHALL SUBMIT SHOP DRAWINGS TO THE ENGINEER PRIOR TO ANY CONSTRUCTION.
5. PRECAST CONCRETE AND STEEL FOR MANHOLES AND INLETS SHALL BE IN ACCORDANCE WITH A.S.T.M. C-478.
6. CASTINGS SHALL BE AS SHOWN ON THE DETAIL SHEET(S) FOR MANUFACTURER, TYPE AND MODEL NUMBER.
7. NUMBER 53 STONE BACKFILL SHALL BE REQUIRED UNDER ALL PAVEMENT AREAS AND TRENCHES WITHIN FIVE(5) FEET OF THE EDGE OF PAVEMENT.
8. ALL TRENCHES UNDER PAVEMENT SHALL BE COMPACTED TO 95 PERCENT MODIFIED PROCTOR.

I. UTILITIES
1. WATER SERVICE
   a. ALL MAIN WATER LINES SHALL BE DESIGNED AND INSTALLED IN ACCORDANCE WITH THE INDIANA-AMERICAN WATER COMPANY (UTILITY DEPT.) AND COORDINATION OF CONSTRUCTION OF THESE MAINS SHALL BE THE RESPONSIBILITY OF THE CONTRACTOR AND SHALL BE COORDINATED PRIOR TO STARTING ANY CONSTRUCTION.
   b. INSTALLATION AND MATERIALS FOR ALL WATER MAIN CONSTRUCTION SHALL MEET CITY OF FRANKLIN UTILITIES AND INDIANA STATE BOARD OF HEALTH SPECIFICATIONS.
   c. SEE SANITARY SEWER (F-9a & F9-b) FOR VERTICAL AND HORIZONTAL SEPARATIONS.
   d. GRANULAR BACKFILL (NO.53 STONE) SHALL BE REQUIRED FOR ALL UTILITIES CROSSINGS UNDER AND WITHIN 5 FEET OF PAVEMENT, AREAS AND TRENCHES UNDER PAVEMENT SHALL BE COMPACTED TO 95 PERCENT MODIFIED PROCTOR.

2. ELECTRIC AND TELEPHONE
   a. CONDUIT SHALL BE REQUIRED FOR ALL CROSSINGS UNDER PAVEMENT AREAS.
   b. THE CONTRACTOR SHALL COORDINATE PLACEMENT OF THESE CONDUITS WITH THE POWER AND TELEPHONE COMPANIES PRIOR TO CONSTRUCTION.

   c. GRANULAR BACKFILL (NO.53 STONE) SHALL BE REQUIRED FOR ALL CROSSINGS UNDER PAVEMENT AREAS AND TRENCHES SHALL BE COMPACTED TO 95 PERCENT MODIFIED PROCTOR.
   d. CONCRETE PADS FOR ELECTRIC AND TELEPHONE TRANSFORMERS SHALL BE SET AT THE APPROXIMATE GROUND GRADE AS SHOWN ON THE SITE DEVELOPMENT GRADING PLANS FOR THE RESPECTIVE LOCATIONS.
   e. THE CONTRACTOR SHALL BE RESPONSIBLE FOR COORDINATING WITH EACH UTILITY FOR INSTALLATION OF ANY LINES OR CONDUITS OR ANY OTHER EQUIPMENT REQUIRED IN THE PROJECT. THE UTILITIES SHALL BE NOTIFIED PRIOR TO THE PLACEMENT OF PAVEMENT A MINIMUM OF 7 WORKING DAYS SO THAT THEY MIGHT INSTALL ANY CROSSINGS.

J. GRANULAR BACKFILL
SHALL BE IN ACCORDANCE WITH CURRENT I.N.D.O.T. STANDARD SPECIFICATIONS

K. PAVEMENT CONSTRUCTION
1. ALL STREET CONSTRUCTION SHALL BE IN ACCORDANCE WITH THE PLANS AND SPECIFICATIONS AND CONFORM TO THE MINIMUM STANDARDS OF CITY OF FRANKLIN PLANNING AND HIGHWAY DEPARTMENTS, AND IF THEIR ARE AREAS UNDEFINED USE THE CURRENT I.N.D.O.T. STANDARD SPECIFICATIONS

2. FLEXIBLE PAVEMENT

a. MATERIALS

a1. GENERAL: USE LOCALLY AVAILABLE MATERIALS AND GRADATIONS WHICH EXHIBIT A SATISFACTORY RECORD OF PREVIOUS INSTALLATIONS.

a2. COMPACTED AGGREGATE BASE: SOUND, ANGULAR CRUSHED LIMESTONE, CRUSHED OR UNCRUSHED GRAVEL, OR CRUSHED OR PROCESSED AIR-COOLED BLAST FURNACE SLAG. COURSE AGGREGATE SHALL BE CLASS A, B, C OR D AND CONFORM TO INDIANA DEPARTMENT OF TRANSPORTATION (I.N.D.O.T.) STANDARD SPECIFICATION SECTION 903.

a3. BASE COURT AGGREGATE: SOUND, ANGULAR CRUSHED STONE, CRUSHED OR UNCRUSHED GRAVEL, OR CRUSHED SLAG, SAND, STONE, OR SLAG SCREENINGS. COARSE AGGREGATES SHALL BE CLASS A OR B AND CONFORM TO I.N.D.O.T. STANDARD SPECIFICATION SECTION 903.

a4. COARSE AGGREGATE FOR SURFACE AND BINDER MIXTURES: CRUSHED STONE, CRUSHED GRAVEL, CRUSHED SLAB, AND SHARP EDGED NATURAL SAND. SURFACE COARSE AGGREGATES SHALL BE CLASS A AND CONFORM TO I.N.D.O.T. STANDARD SPECIFICATIONS SECTION 903.

a5. ASPHALT CEMENT: PETROLEUM ASPHALT CEMENT, AP 5 WITH PENETRATION OF 60-70 OR VISCOSITY GRADED ASPHALT CEMENT AC-20 CONFORMING TO I.N.D.O.T. STANDARD SPECIFICATION SECTION 903.

a6. PRIME COAT: MEDIUM-CURE LIQUID ASPHALT OR ASPHALT EMULSION CONFORMING TO I.N.D.O.T. STANDARD SPECIFICATION SECTION 408.

a7. TACK COAT: RAPID-CURE LIQUID ASPHALT OR ASPHALT EMULSION CONFORMING TO I.N.D.O.T. STANDARD SPECIFICATION SECTION 409.

a8. LANE MARKING PAINT: CHLORINATED RUBBER-ALKYD TYPE, AASHTO M248 (FS TT-P-115), TYPE III.

a9. SEAL COAT: ASPHALT PAVEMENT SEALER (BLACK) ASTM-D-3320.

b. ASPHALT-AGGREGATE MIXTURE
ALL BITUMINOUS MIXTURES ARE TO CONFORM TO CURRENT I.N.D.O.T. SPECIFICATIONS. CONTRACTOR SHALL PROVIDE A JOB MIX FORMULA PER EACH TYPE OF ASPHALT PRIOR TO CONSTRUCTION

b1. SURFACE COURSE: #11

b2. BINDER COURSE: #8

b3. BASE COURSE: TYPE: #5D

c. SURFACE PREPARATION

c1. REMOVE LOOSE MATERIAL FROM COMPACTED SUBBASE SURFACE IMMEDIATELY BEFORE APPLYING PRIME COAT.

1. PROOF ROLL SUBGRADE SURFACE TO CHECK FOR UNSTABLE AREAS AND AREAS REQUIRING ADDITIONAL COMPACTION.

2. NOTIFY CONTRACTOR OF UNSATISFACTORY CONDITIONS. DO NOT BEGIN PAVING WORK UNTIL DEFICIENT SUBBASE AREAS HAVE BEEN CORRECTED AND ARE READY TO RECEIVE PAVING.

c2. AGGREGATE BASE: AFTER PLACEMENT, PROOF ROLL COMPACTED AGGREGATE BASE SURFACE TO CHECK FOR UNSTABLE AREAS AND AREAS REQUIRING ADDITIONAL COMPACTION.

1. NOTIFY CONTRACTOR OF UNSATISFACTORY CONDITIONS. DO NOT BEGIN PAVING WORK UNTIL DEFICIENT AGGREGATE BASE AREAS HAVE BEEN CORRECTED AND ARE READY TO RECEIVE PAVING.

2. REMOVE LOOSE MATERIAL FROM COMPACTED AGGREGATE BASE SURFACE IMMEDIATELY BEFORE APPLYING PRIME COAT.

c3. TACK COAT: APPLY TO CONTACT SURFACES OF PREVIOUSLY CONSTRUCTED ASPHALT AND SURFACES ABUTTING OR PROJECTING INTO ASPHALT CONCRETE PAVEMENT. DISTRIBUTE AT RATE OF 0.05 TO 0.15 GAL. PER SQ. YD. OF SURFACE.

1. ALLOW TO DRY UNTIL AT PROPER CONDITION TO RECEIVE PAVING.

2. EXERCISE CARE IN APPLYING BITUMINOUS MATERIALS TO AVOID SMEARING OF ADJOINING SURFACES. REMOVE AND CLEAN DAMAGED SURFACES.

d. PLACING THE MIX

d1. GENERAL: PLACE BITUMINOUS AGGREGATE MIXTURE ON PREPARED SURFACE, SPREAD AND STRIKE-OFF. SPREAD MIXTURE AT MINIMUM TEMPERATURE OF 225 DEGREES F. (107 DEGREES C). PLACE INACCESSIBLE AND SMALL AREAS BY HAND. PLACE EACH COURSE TO REQUIRED GRADE, CROSS-SECTION, AND COMPACTED THICKNESS.

d2. BASE COURSE, COMPACTED AGGREGATE: SPREAD AND COMPACT IN TWO LIFTS AS FOLLOWS:

1. FIRST LIFT: NO. 5'S SHALL BE A MINIMUM OF 4" OR 1/2 THE TOTAL DEPTH OF AGGREGATE. EXTEND THE FIRST LIFT 4" OR A DISTANCE EQUAL TO THE DEPTH OF THE LIFT BEYOND THE SECOND LIFT.

2. SECOND LIFT: SIZE NO. 53.

d3. PRIME COAT: SUBBASE SURFACE SHALL BE PRIMED IN ACCORDANCE WITH THE APPLICABLE REQUIREMENTS OF SECTION 408 OF I.N.D.O.T. STANDARD SPECIFICATIONS.

d4. HOT ASPHALT CONCRETE BINDER COURSE: SPREAD AND ROLL TO MINIMUM FINISH DEPTHS INDICATED ON DETAILS.

d5. TACK COAT: BINDER COURSE SHALL BE TACKED PRIOR TO THE INSTALLATION OF THE SURFACE COURSE IN ACCORDANCE WITH THE APPLICABLE REQUIREMENTS OF SECTION 409 OF I.N.D.O.T. STANDARD SPECIFICATIONS.

d6. SURFACE COURSE: SPREAD AND ROLL TO MINIMUM FINISH DEPTH INDICATED ON DETAILS. FINISH ELEVATION SHALL BE TRUE TO LINE AND GRADE WITHIN 1/2" OF TRUE ELEVATION.

d7. PAVER PLACING: PLACE IN STRIPS NOT LESS THAN 10' WIDE, UNLESS OTHERWISE ACCEPTABLE TO ARCHITECT/ENGINEER. AFTER FIRST STRIP HAS BEEN PLACED AND ROLLED, PLACE SUCCEEDING STRIPS AND EXTEND ROLLING TO OVERLAP PREVIOUS STRIPS. COMPLETE BINDER COURSE FOR A SECTION BEFORE PLACING SURFACE COURSE.

d8. JOINTS: MAKE JOINTS BETWEEN OLD AND NEW PAVEMENTS, OR BETWEEN PAVER PASSES, OR BETWEEN SUCCESSIVE DAYS WORK, TO ENSURE CONTINUOUS BOND BETWEEN ADJOINING WORK. CONSTRUCT JOINTS TO HAVE SAME TEXTURE, DENSITY AND SMOOTHNESS AS OTHER SECTIONS. CLEAN CONTACT SURFACES AND APPLY TACK COAT.

e. ROLLING

e1. GENERAL: BEGIN ROLLING WHEN MIXTURE WILL BEAR ROLLER WEIGHT WITHOUT EXCESSIVE DISPLACEMENT.

1. COMPACT MIXTURE WITH HOT HAND TAMPERS OR VIBRATING PLATE COMPACTORS IN AREAS INACCESSIBLE TO ROLLERS.

e2. BREAKDOWN ROLLING: ACCOMPLISH BREAKDOWN OR INITIAL ROLLING IMMEDIATELY FOLLOWING ROLLING OF JOINTS AND OUTSIDE EDGE. CHECK SURFACE AFTER BREAKDOWN ROLLING, AND REPAIR DISPLACED AREAS BY LOOSENING AND FILLING, IF REQUIRED, WITH HOT MATERIAL.

e3. SECOND ROLLING: FOLLOW BREAKDOWN ROLLING AS SOON AS POSSIBLE, WHICH MIXTURE IS HOT. CONTINUE SECOND ROLLING UNTIL MIXTURE HAS BEEN THOROUGHLY COMPACTED.

e4. FINISH ROLLING: PERFORM FINISH ROLLING WHILE MIXTURE IS STILL WARM ENOUGH FOR REMOVAL OF ROLLER MARKS. CONTINUE ROLLING UNTIL ROLLER MARKS ARE ELIMINATED AND COURSE HAS ATTAINED MAXIMUM DENSITY.

e5. PATCHING: REMOVE AND REPLACE PAVING AREAS MIXED WITH FOREIGN MATERIALS AND DEFECTIVE AREAS. CUT OUT SUCH AREAS AND FILL WITH FRESH, HOT BITUMINOUS AGGREGATE MIX. COMPACT BY ROLLING TO MAXIMUM SURFACE DENSITY AND SMOOTHNESS.

e6. PROTECTION: AFTER FINAL ROLLING, DO NOT PERMIT VEHICULAR TRAFFIC ON PAVEMENT UNTIL IT HAS COOLED AND HARDENED.

e7. ERECT BARRICADES TO PROTECT PAVING FROM TRAFFIC UNTIL MIXTURE HAS COOLED ENOUGH NOT TO BECOME MARKED.

e8. SEAL COAT: ALLOW PAVEMENT 30 DAYS TO CURE BEFORE SEALER IS APPLIED. ACCORDING TO MANUFACTURER'S RECOMMENDATIONS APPLY TWO COATS OF PAVEMENT SEALER. DO NOT APPLY SEAL COAT UNTIL AFTER SURFACE COURSE HAS BEEN CHECKED AND ANY IRREGULARITIES OR ERRORS HAVE BEEN SATISFACTORILY CORRECTED.

1. APPLY FIRST COAT IN LENGTHWISE FASHION TO PAVEMENT SURFACE.

2. APPLY SECOND COAT IN CROSS WISE FASHION (90 DEGREES TO DIRECTION OF FIRST COAT).

3. APPLY SEALER AT UNIFORM RATE AS RECOMMENDED BY MANUFACTURER.

f. TRAFFIC AND LANE MARKINGS

f1. CLEANING: SWEEP AND CLEAN SURFACE TO ELIMINATE LOOSE MATERIAL AND DUST.

f2. STRIPPING: USE CHLORINATED RUBBER BASE TRAFFIC LANE-MARKING PAINT, FACTORY-MIXED, QUICK-DRYING, AND NON-BLEEDING.

COLOR: YELLOW.

1. DO NOT APPLY TRAFFIC AND LANE MARKING PAINT UNTIL LAYOUT AND PLACEMENT HAS BEEN VERIFIED WITH ARCHITECT/ENGINEER.

2. APPLY PAINT WITH MECHANICAL EQUIPMENT TO PRODUCE UNIFORM STRAIGHT EDGES. APPLY IN TWO COATS AT MANUFACTURER'S RECOMMENDED RATES.

g. FIELD QUALITY CONTROL

g1. TESTING AND INSPECTION SERVICE:

1. OWNER SHALL EMPLOY A TESTING LABORATORY TO PERFORM PAVEMENT TESTING AND INSPECTION SERVICE FOR QUALITY CONTROL DURING PAVING OPERATIONS.

2. TESTING SERVICE SHALL HAVE REPRESENTATIVE PRESENT TO OBSERVE AND PERFORM TESTS AT ALL TIMES PAVING WORK IS IN PROGRESS.

g2. GENERAL: TESTING SERVICE REPRESENTATIVE SHALL TAKE A MINIMUM OF TWO SAMPLES PER LIFT OF BITUMINOUS AGGREGATE MIX EACH DAY BEFORE PAVING OPERATION. LABORATORY TEST SHALL BE PERFORMED ON THESE SAMPLES TO DETERMINE AGGREGATE GRADATION AND ASPHALT CONTENT.

1. TEST IN-PLACE COMPACTED BITUMINOUS AGGREGATE MIX COURSES FOR COMPLIANCE WITH REQUIREMENTS FOR THICKNESS, DENSITY AND AIR VOIDS AND SURFACE SMOOTHNESS. REPAIR OR REMOVE AND REPLACE UNACCEPTABLE PAVING AS DIRECTED BY ENGINEER.

2. A TEST SECTION AT A MINIMUM SIZE OF 100' X 12' SHALL BE PLACED AT A LOCATION AS DIRECTED BY THE COUNTY PRIOR TO FULL PRODUCTION FOR EACH TYPE OF MIX. THE TEST SECTION SHALL BE COMPACTED TO DETERMINE A TARGET DENSITY FOR THE REMAINDER OF THE PAVEMENT.

g3. THICKNESS: IN-PLACE COMPACTED THICKNESS WILL NOT BE ACCEPTABLE IF EXCEEDING FOLLOWING ALLOWABLE VARIATION FROM REQUIRED THICKNESS:

AGGREGATE BASE COURSE: 1/2", PLUS OR MINUS.
BASE COURSE: 1/2", PLUS OR MINUS.
BINDER COURSE: 1/4", PLUS OR MINUS.
SURFACE COURSE: 1/4", PLUS OR MINUS.

1. A MINIMUM OF TWO PAVEMENT CORES PER COMPACTED LIFT SHALL BE TAKEN. CORES ARE TO BE TAKEN AT LOCATIONS AND AT TIMES OF DAY AS DIRECTED BY THE TESTING SERVICE. THE FOLLOWING TESTS SHALL BE PERFORMED BY THE TESTING SERVICE, ON EACH PAVEMENT CORE:

2. A TEST SECTION AT A MINIMUM SIZE OF 100'x12' SHALL BE PLACED AT A LOCATION AS DIRECTED BY THE COUNTY PRIOR TO FULL PRODUCTION FOR EACH TYPE OF MIX. THE TEST SECTION SHALL BE COMPACTED TO DETERMINE A TARGET DENSITY OF THE REMAINDER OF THE PAVEMENT.

3. TESTING SERVICE SHALL SUBMIT CERTIFIED RESULTS TO THE OWNER AND ARCHITECT/ENGINEER WITHIN 72 HOURS AFTER TESTS ARE MADE, WITH THEIR COMMENTS AND RECOMMENDATIONS FOR ACTION.

4. PAVEMENT WHICH FAILS TO COMPLY WITH APPROVED JOB MIX FORMULA SHALL BE REPLACED AS DIRECTED BY THE ARCHITECT/ENGINEER.

g4. SURFACE SMOOTHNESS: TEST FINISHED SURFACE FOR SMOOTHNESS, USING 10' STRAIGHTEDGE APPLIED PARALLEL WITH, AND AT RIGHT ANGLES TO CENTERLINE OF PAVED AREA. SURFACE WILL NOT BE ACCEPTABLE IF EXCEEDING THE FOLLOWING TOLERANCES FOR SMOOTHNESS.

AGGREGATE BASE COURSE SURFACE: 1/4".
BASE COURSE SURFACE: 1/4".
BINDER COURSE SURFACE: 1/8".

WEARING COURSE SURFACE: 1/8".

1. CHECK SURFACED AREAS AT INTERVALS AS DIRECTED BY TESTING SERVICE.

g5. DENSITY TESTS: DENSITY TESTS SHALL BE MADE AT EACH LIFT. TESTS SHALL BE AS FOLLOWS:

1. TESTS WILL BE REQUIRED AT VARIOUS TIMES AND LOCATIONS FOR SUBGRADE AND BASE COURSES FOR ASPHALT PAVING AREAS.

g6. TESTING SERVICE SHALL SUBMIT CERTIFIED RESULTS TO THE OWNER AND ENGINEER WITHIN 72 HOURS AFTER TESTS ARE MADE WITH THEIR COMMENTS AND RECOMMENDATIONS FOR ACTION.

3. SUBGRADE SHALL BE PREPARED IN ACCORDANCE WITH I.N.D.O.T. STANDARD SPECIFICATIONS, SECTION 207 AND SUBSECTION 501.07. NO TRAFFIC SHALL BE PERMITTED ON THE PREPARED SUBGRADE PRIOR TO PAVING.

4. SEE GRADING, SECTION "E" FOR ADDITIONAL COMPACTION REQUIREMENTS.

L. CONCRETE CURB AND WALKS
1. SEE DETAIL SHEET FOR TYPE AND DETAILS.
2. CONCRETE SHALL BE READY MIXED PORTLAND CEMENT CONFORMING TO A.S.T.M. C-150 AND WATER. AGGREGATE SHALL CONFORM TO A.S.T.M. C-33. CONCRETE SHALL BE 6 BAG CLASS "A" WITH COMPRESSIVE STRENGTH OF CONCRETE AT 28 DAYS BEING MINIMUM 4000 P.S.I. WHERE REQUIRED,
3. REINFORCEMENT
   a. WELDED WIRE FABRIC SHALL CONFORM TO A.S.T.M. A-185
   b. REINFORCING STEEL SHALL CONFORM TO A.S.T.M. A-615
4. APPLICATION
   a. PLACE CONCRETE ONLY ON A MOIST, COMPACTED SUBGRADE OR BASE FREE FROM LOOSE MATERIAL. PLACE NO CONCRETE ON MUDDY OR FROZEN SUBGRADE.
   b. CONCRETE SHALL BE DEPOSITED SO AS TO REQUIRE AS LITTLE REHANDLING AS PRACTICABLE. WHEN CONCRETE IS TO BE PLACED AT AN ATMOSPHERIC TEMPERATURE OF 35 DEGREES F OR LESS, CURRENT I.N.D.O.T. SPECIFICATIONS SHALL APPLY.
   c. EXCEPT AS OTHERWISE SPECIFIED, CURE ALL CONCRETE BY ONE OF THE METHODS DESCRIBED IN CURRENT I.N.D.O.T. SPECIFICATIONS

M. FINISH GRADING AND SEEDING

ALL EROSION CONTROL MEASURES ARE REQUIRED TO BE PER INDIANA STORMWATER QUALITY MANUAL SPECIFICATION, DATED OCTOBER 2007, OR MOST CURRENT

1. OVER THE APPROVED ROUGH GRADE (SEE SECTION E), SPREAD 4" MINIMUM OF TOPSOIL OR APPROVED FILL TO SUCH DEPTH AS WILL FINISH TO THE REQUIRED FINISH GRADES AND CONTOURS AFTER ROLLING AND NATURAL SETTLEMENT. NEW GRADES SHALL SLOPE UNIFORMLY BETWEEN LEVELS ESTABLISHED ON THE PLANS AND INTERSECTIONS OF NEW GRADES WITH EXISTING GRADES SHALL BE UNIFORM AND SMOOTH.

2. TEMPORARY SEEDING – THE AREAS WHERE STRIPPING, CUTS OR FILLS HAVE BEEN GRADED SHALL BE SEEDED FOR SILT AND EROSION PROTECTION SHALL BE AS PER I.S.W.Q.M. SPECIFICATIONS (TEMPORARY SEEDING). SEEDING SHALL BE WITH ONE OF THE FOLLOWING METHODS:

   a. EARLY SPRING MIX: 100% SPRING OATS SEEDING RATE: 100 LBS./ACRE
   b. SPRING OR LATE FALL MIX: 100% ANNUAL RYEGRASS SEEDING RATE: 40 LBS./ACRE
   c. FALL MIX: 100% PERENNIAL RYE SEEDING RATE 150 LBS./ACRE

3. MULCHING – MULCHING IS REQUIRED FOR ALL TEMPORARY AND PERMANENT SEEDED AREAS AS TO PREVENT REMOVAL BY WIND OR WATER. MULCHING SHALL BE ANCHORED AS OUTLINED IN I.S.W.Q.M. SPECIFICATIONS (MULCHING), BY A COMBINATION OF THE FOLLOWING:

   a. MULCH ANCHORING TOOL OR FARM DISK b. CLEATING WITH DOZER TRACKS c. WOOD HYDROMULCH FIBERS d. SYNTHETIC TACKIFIERS, BINDER OR SOILD STABLIZERS e. NETTING

4. EROSION CONTROL BLANKET/NETTING – BLANKET IS REQUIRED AT SLOPED AREAS AND CONVEYANCE CHANNELS TO PREVENT EROSION AND PROTECT SOIL AND SEEDING FROM WATER RUNOFF. EROSION CONTROL BLANKETS SHALL BE INSTALLED PER CURRENT I.S.W.Q.M. SPECIFICATIONS (SURFACE STABILIZTATION).

SYMBOL	REVISION	DATE

SCALE: NONE
DRAWN: JPH
CHECKED: JKS
CERTIFIED: JKS

PROJECT: COMMERCE BUSINESS PARK
BUILDING #1
CITY OF FRANKLIN, JOHNSON COUNTY, INDIANA
TITLE: SPECIFICATIONS

PROJECTS *plus*
GREENWOOD SURVEYING COMPANY
CIVIL ENGINEERING – LAND SURVEYING
LAND PLANNING – CONSTRUCTION MANAGEMENT
2555 Fairview Place Suite A – Greenwood, Indiana 46142
(317)-882-5003

SEAL
JEFFERY K. SMITH
REGISTERED
No. 19419
STATE OF INDIANA
PROFESSIONAL ENGINEER
7/18/13

JOB NUMBER 13011
SHEET 10
OF 10 SHEETS
DATE JULY 18, 2013