ASSEMBLY BUILDING

2555 North Hurricane Road, Franklin, Indiana 46131
City of Franklin Docket Number - PC2010-010

CONSTRUCTION PLANS

Issued for Review: March 25, 2013
Final Approval Date: 00-00-00

PROPOSED SITE

SITE ACREAGE: 121±
DISTURBED ACREAGE
= 0.45 ± Acre
SITE ZONING = PUD

SITE ADDRESS: 2555 North Hurricane Road

SITE SUMMARY STATEMENT

The Legends Indiana is proposing an Assembly Building.
These plans reflect this proposed structure.
The overall site acreage is approximately 121-Acres with 0.45-Acre being disturbed for this proposed expansion.

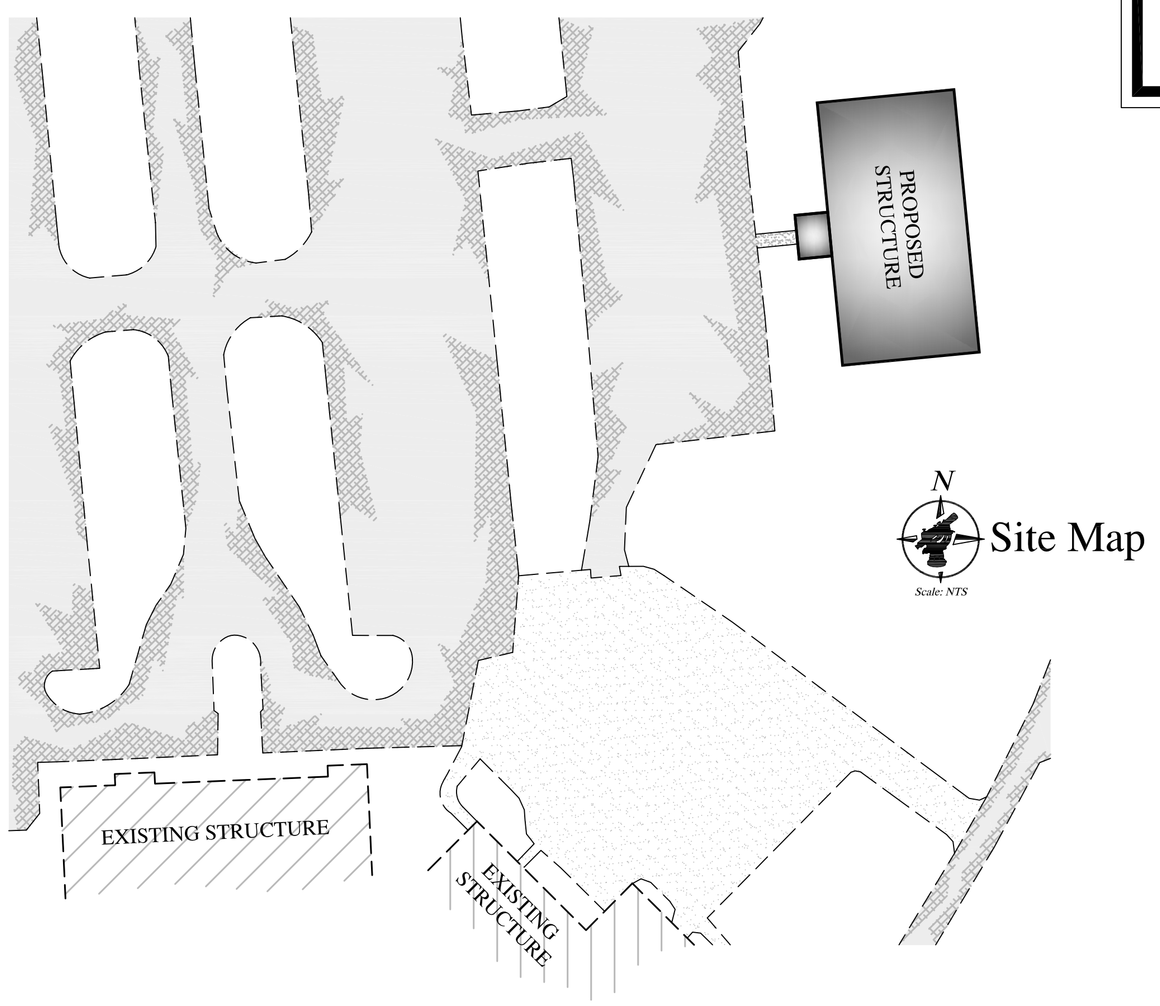

Site Map
Scale: NTS

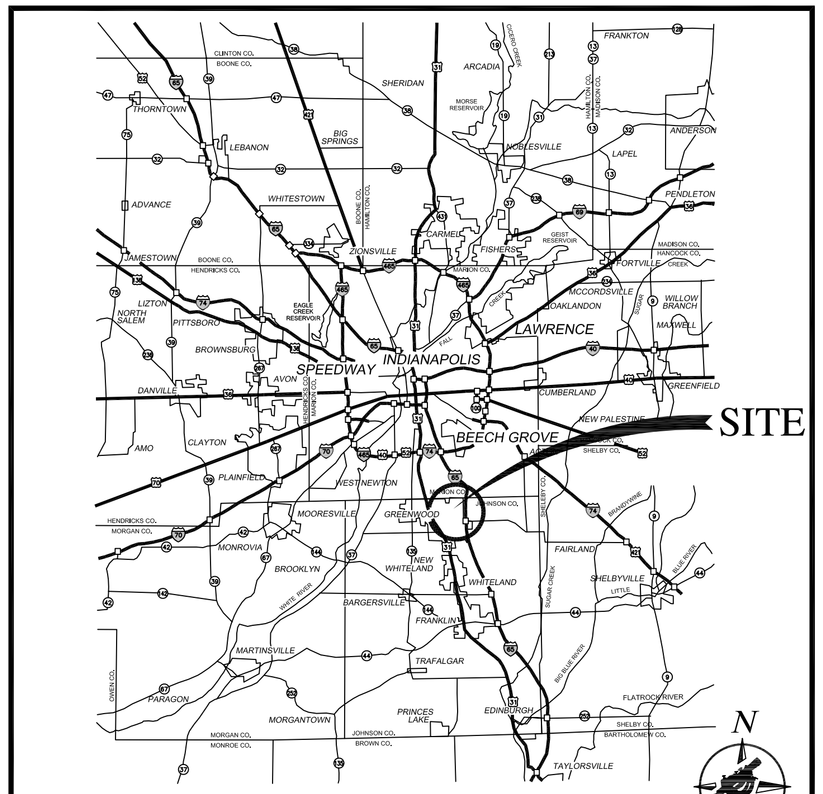

Location Map
Scale: NTS

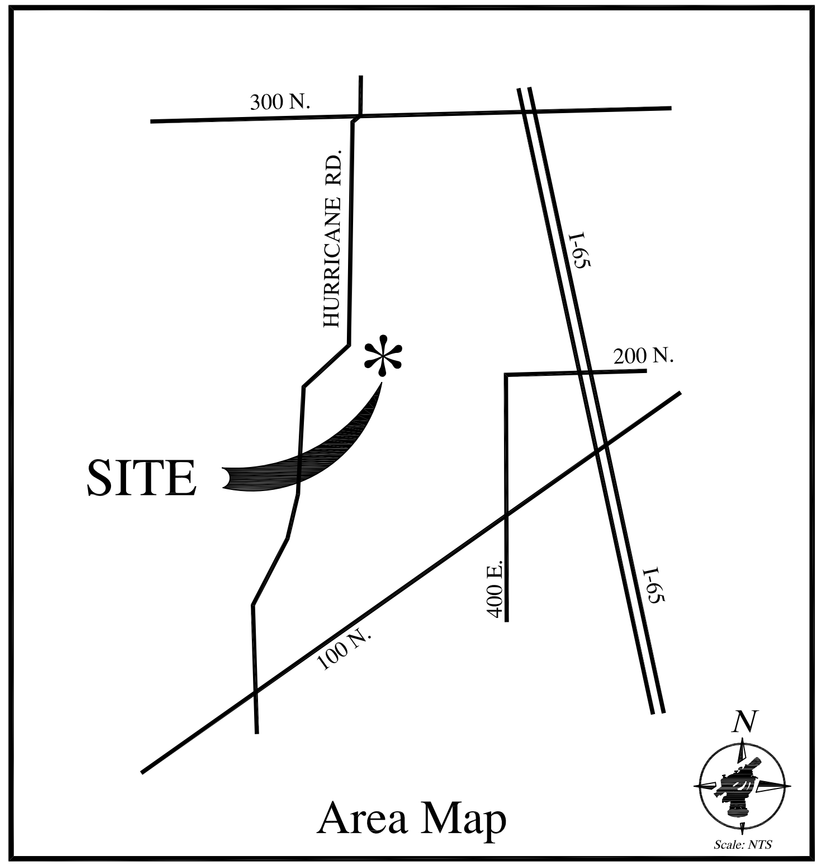

Area Map
Scale: NTS

CLIENT

DHB Golf

2290 North Hurricane Road
Franklin, Indiana 46131

INDEX OF DRAWINGS

SHEET NUMBER	SHEET DESCRIPTION
1	TITLE SHEET
2	EXISITNG SITE CONDITIONS
3	DEVELOPMENT PLAN
4	EROSION CONTROL PLAN
5	SPECIFICATIONS
6 - 7	DETAILS

PLAN REVISIONS

REVISION DATE	REVISION DESCRIPTION

UTILITY CONTACTS

SANITARY - City of Franklin
796 South State Street
Franklin, Indiana 46131
Contact: Rick Littleton
(317) 736-3640

GAS - Vectren
600 Industrial Drive
Franklin, Indiana 46131
Contact: Steve Washburn
(317) 736-2989

WATER - Indiana-American Water Company
110 South Park Boulevard
Greenwood, Indiana 46143
Contact: Ron Ballard
(317) 881-0270

ELECTRIC - Duke Energy
2515 North Morton Street
Franklin, Indian 46131
contac: Tim Padgett
(317) 736-2016

TELEPHONE - Embarq
5858 North College Avenue
Indinapolis, Indiana 46220
Contact: Jeff Rice
(317) 252-5017

CABLE - Insight Communication
2520 Endress Place
Greenwood, Indiana 46143
Contact: George Foldhand
(317) 535-4198

PRO FORMA SURVEY
March 22, 2013
This drawing is not intended to be represented as a Retracemnt or Original Boundary Survey, a Route Survey, or a Surveyor Location Report

Indiana811
Know what's below. Call before you dig.

Plans Prepared By:

NORTHPOINTE ENGINEERING & SURVEYING, Inc.

Engineering, Land Surveying
Consulting & Inspection

Donna Jo Smithers
Professional Land Surveyor
President / Owner

Venus L.L. Thorne
Professional Engineer

Dane Waltman
Project Manager / Field Operations

6125 South East Street, Suite "B"
Indianapolis, Indiana 46227-2147
Office - 317-884-3020
www.npes.biz

CERTIFIED BY:

DONNA JO SMITHERS REGISTERED No. 20100076 STATE OF INDIANA LAND SURVEYOR

03-22-13
Donna Jo Smithers
Professional Land Surveyor
State of Indiana
Registration Number 20100076

VENUS L.L. THORNE REGISTERED No. 11200278 STATE OF INDIANA PROFESSIONAL ENGINEER

03-22-13
Venus L.L. Thorne
Professional Engineer
State of Indiana
Registration Number 11200278

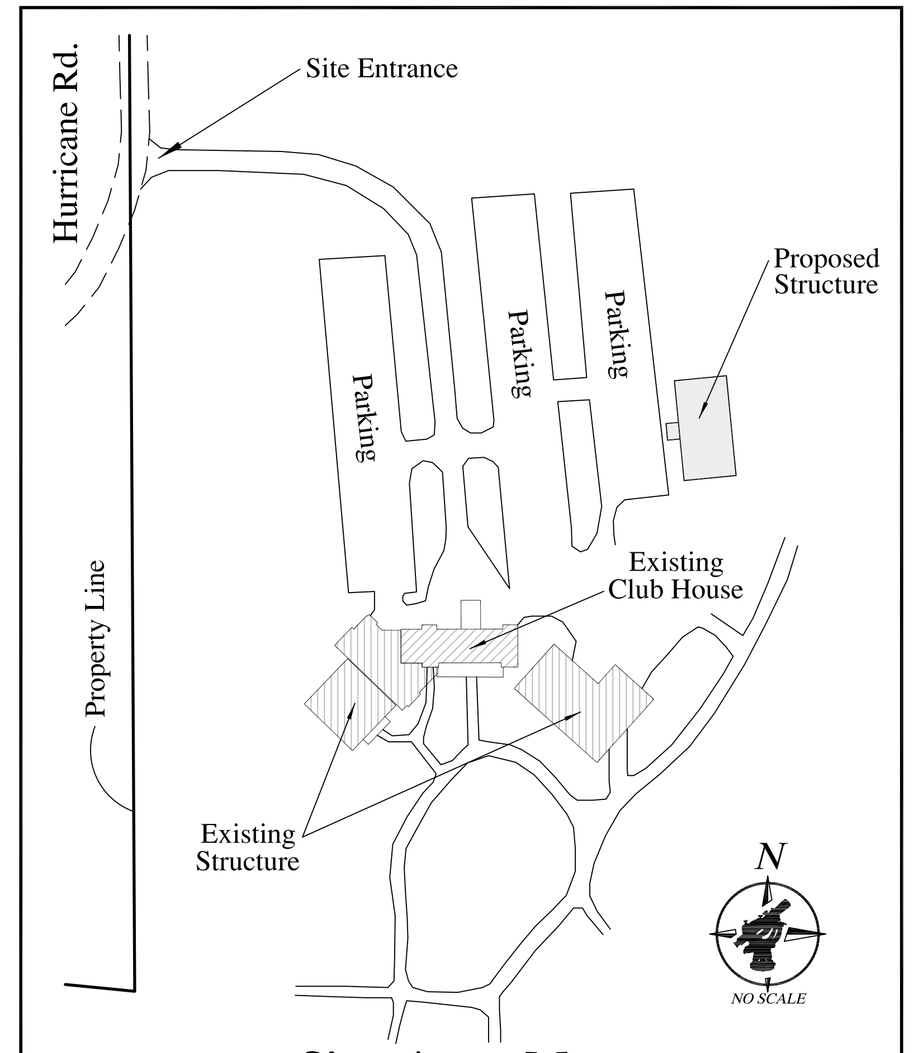

Site Area Map

LEGEND

- (DI) -EXISTING STORM (BEEHIVE) INLET
- -EXISTING STORM SEWER
- (ES) -EXISTING SANITARY MANHOLE
- (SC) -EXISTING SANITARY CLEANOUT
- -EXISTING SANITARY SEWER
- +000.0 -EXISTING SPOT ELEVATION
- -EXISTING UTILITY POLE
- (EW) -EXISTING WELL
- -EXISTING STREET SIGN
- -EXISTING TREE

LEGEND

- (A) - EXISTING GRASS AREA
- (B) - EXISTING DITCH
- (C) - EXISTING BITUMINOUS PAVEMENT
- (D) - EXISTING CONCRETE
- (E) - EXISTING SWALE TO BE RELOCATED SEE DEVELOPMENT PLAN

DEVELOPMENT NOTES

1. ALL WORK SHALL CONFORM TO STATE AND LOCAL REGULATIONS.
2. THE CONTRACTOR SHALL VERIFY ALL DIMENSIONS IN THE FIELD AS SHOWN ON THIS PLAN PRIOR TO STARTING CONSTRUCTION. IF ANY DISCREPANCIES ARE FOUND IN THESE PLANS FROM FIELD CONDITIONS, THE CONTRACTOR SHALL NOTIFY THE ENGINEERS/SURVEYORS IMMEDIATELY.
3. CONTRACTOR SHALL NOTIFY ANY AND ALL UTILITY COMPANIES WITH UTILITIES PRESENT ON SITE 72 HOURS BEFORE STARTING CONSTRUCTION. CONTRACTOR SHALL HAVE UTILITY COMPANIES VERIFY (i.e. LOCATION, DEPTH AND SIZE) ALL UTILITIES WITHIN LIMITS OF CONSTRUCTION.
4. ALL UTILITY SERVICES INTO THE PROPOSED BUILDING SHALL BE COORDINATED BETWEEN CONTRACTOR, DEVELOPER, ARCHITECT AND THE RESPECTIVE UTILITY COMPANY UNLESS OTHERWISE SHOWN.
5. CONTRACTOR SHALL PROVIDE POSITIVE DRAINAGE IN ALL AREAS (GRASS/LANDSCAPE AND CONCRETE/PAVEMENT) WHEN SITE WORK IS COMPLETE. TESTS SHALL BE PERFORMED TO INSURE AND CORRECT, IF NECESSARY, ANY PONDING, "BIRD BATH" CONDITIONS.
6. CONTRACTOR SHALL RESURFACE AND/OR RECONSTRUCT BACK TO ITS ORIGINAL CONDITION, ANY AREAS DISTURBED BY CONSTRUCTION ACTIVITY AS WELL AS TRAFFIC FROM SUPPLIERS AND SUBCONTRACTORS AFTER CONSTRUCTION WORK IS COMPLETE.
7. ALL WATERLINE CONSTRUCTION, RELOCATION AND SERVICE INTO THE PROPOSED BUILDING SHALL BE DONE IN ACCORDANCE WITH LOCAL WATER COMPANY STANDARDS AND SPECIFICATIONS.
8. ALL CONSTRUCTION ACTIVITY ON THIS SITE SHALL BE PERFORMED IN COMPLIANCE WITH APPLICABLE O.S.H.A. STANDARDS FOR WORKER SAFETY.
9. ALL CONTRACTORS SHALL BE RESPONSIBLE FOR OBTAINING THE MOST UPDATED SET OF CONSTRUCTION PLANS PRIOR TO COMMENCING CONSTRUCTION.
10. THE CONTRACTOR IS RESPOSIBLE TO CALCUATE THEIR OWN DIRT QUATITIES TO DETERMINE A SITE BALANCE. tHE CONTRACTOR IS ALSO RESPONSIBLE TO CHECK EXISTING GRADES AGAINST PROPOSED GRADES TO DETERMINE ACCURACY OF DIRT TO BE MOVED ON THE SITE. ONCE THE CONTRACTOR MOVES ANY DIRT ON THE SITE THEY ARE RESPONSIBLE FOR ALL DIRT TO BE MOVED AT NO ADDITIONAL COST TO THE DEVELOPER OR ENGINEER.
11. ALL STORM SEWERS ARE TO BE PROVATELY OWNED AND MAINTAINED.
12. ALL INLET CASTINS SHALL HAVE "ENVIRONMENTALLY FRIENDLY LOGOS" FOR WATER QUALITY AWARENESS.
13. ALL SANITARY SEWER LATERALS SHOWN ARE TO BE 6-INCH PVC. NORMAL LATERAL SLOPE IS ¼-INCH PER FOOT. MINIMUM LATERAL SLOPE IS ⅛-INCH PER FOOT. MINIMUM COVER IS 4-FEET.

BENCHMARK: TBM#1

GPS - SPC System Indiana East Zone (NAD 83)

Capped Rebar Set with pink cap stamped "Northpointe Surveying, Inc. 20100076"

Trimble R8 Receiver on INDOT RTK Network Base (RTCM 0011) Using GEIOD 09 (Conus)

ELEVATION = NAVD 88 - 744.38

FLOOD HAZARD STATEMENT

The accuracy of any flood hazard data shown on this report is subject to map scale uncertainty and to any other uncertainty in location or elevation on the referenced Flood Insurance Rate Map. The surveyed parcel lies within Zone "X" as said land plots by scale on Community Panel No. 18081 C 0143 D of the Flood Insurance Rate Map for the City of Franklin, Johnson County, Indiana dated August 2, 2007.

PRO FORMA SURVEY
March 22, 2013
This drawing is not intended to be represented as a Retracemnt or Original Boundary Survey, a Route Survey, or a Surveyor Location Report

N
0 15 30 60
Bar Scale
Scale:1"=30'

PARKING CHART

GOLF COURSE:	45 HOLES
EMPLOYEES ON LARGEST SHIFT:	12
VEHICLES STORED ONSITE:	2
PARKING REQUIRED:	114 SPACES

20 SPACES PER 9 HOLES
1 SPACE PER EMPLOYEE ON LARGEST SHIFT
1 SPACE PER BUSINESS VEHICLES STORED ONSITE
PARKING PROVIDED:
188 SPACES

Septic - Well Note

ANY ONSITE WELL OR SEPTIC MUST BE PROPERLY ABANDONED WITH THE JOHNSON COUNTY HEALTH DEPARTMENT PERSONNEL

Indiana811
Know what's below. Call before you dig.

UTILITY STATEMENT:
THE EXISTING UNDERGROUND UTILITIES SHOWN HAVE BEEN LOCATED FROM VISIBLE FIELD EVIDENCE AND/OR EXISTING DRAWINGS. NORTHPOINTE INC. MAKES NO GUARANTEES THAT THE UTILITY INFORMATION SHOWN COMPRISES ALL SUCH UTILITIES IN THE AREA, IN SERVICE OR ABANDONED. NORTHPOINTE INC. FURTHER STATES THAT THE UNDERGROUND UTILITY DATA SHOWN DOES NOT INDICATE PRECISE LOCATIONS.

THIS DRAWING/COMPUTER FILE IS THE PROPERTY OF NORTHPOINTE SURVEYING INC. ANY REPRODUCTION OR REUSE OF THIS DOCUMENT FOR ANY PURPOSE OTHER THAN THE PROJECT FOR WHICH IT WAS ORIGINALLY INTENDED, WITH OR WITHOUT PERMISSION FROM NORTHPOINTE INC., BY ITS USE AGREES TO INDEMNIFY AND HOLD HARMLESS NORTHPOINTE FROM ANY LOSS, INCLUDING BUT NOT LIMITED TO ATTORNEY FEES, OCCURRING FROM THEIR USE.

Seal
DONNA JO SMITHERS
REGISTERED
No. 20100076
STATE OF INDIANA
LAND SURVEYOR
03-22-13

Seal
VENUS L.L. THORNE
REGISTERED
No. 11200278
STATE OF INDIANA
PROFESSIONAL ENGINEER
03-22-13

SCALE 1"=30'	
DRAWN BY	
CHECKED BY	DJS

PREPARED FOR
The Legends Indiana
2290 N. Hurricane Road
Franklin Indiana 46131

PROJECT NAME
The Legends of Indiana Building Expansion
City of Franklin, Johnson County, Indiana

SHEET TITLE
EXISTING SITE CONDITIONS

Engineering, Land Surveying Consulting & Inspection
Donna Jo Smithers
Professional Land Surveyor
President / Owner
Venus L.L. Thorne
Professional Engineer
Dane Wallman
Project Manager / Field Operations
6125 South East Street, Suite "B"
Indianapolis, Indiana 46227-2147
Office: 317-784-5020
www.npes.biz
NORTHPOINTE ENGINEERING & SURVEYING, Inc.

Date: 03-22-2013
Job # 13-0018

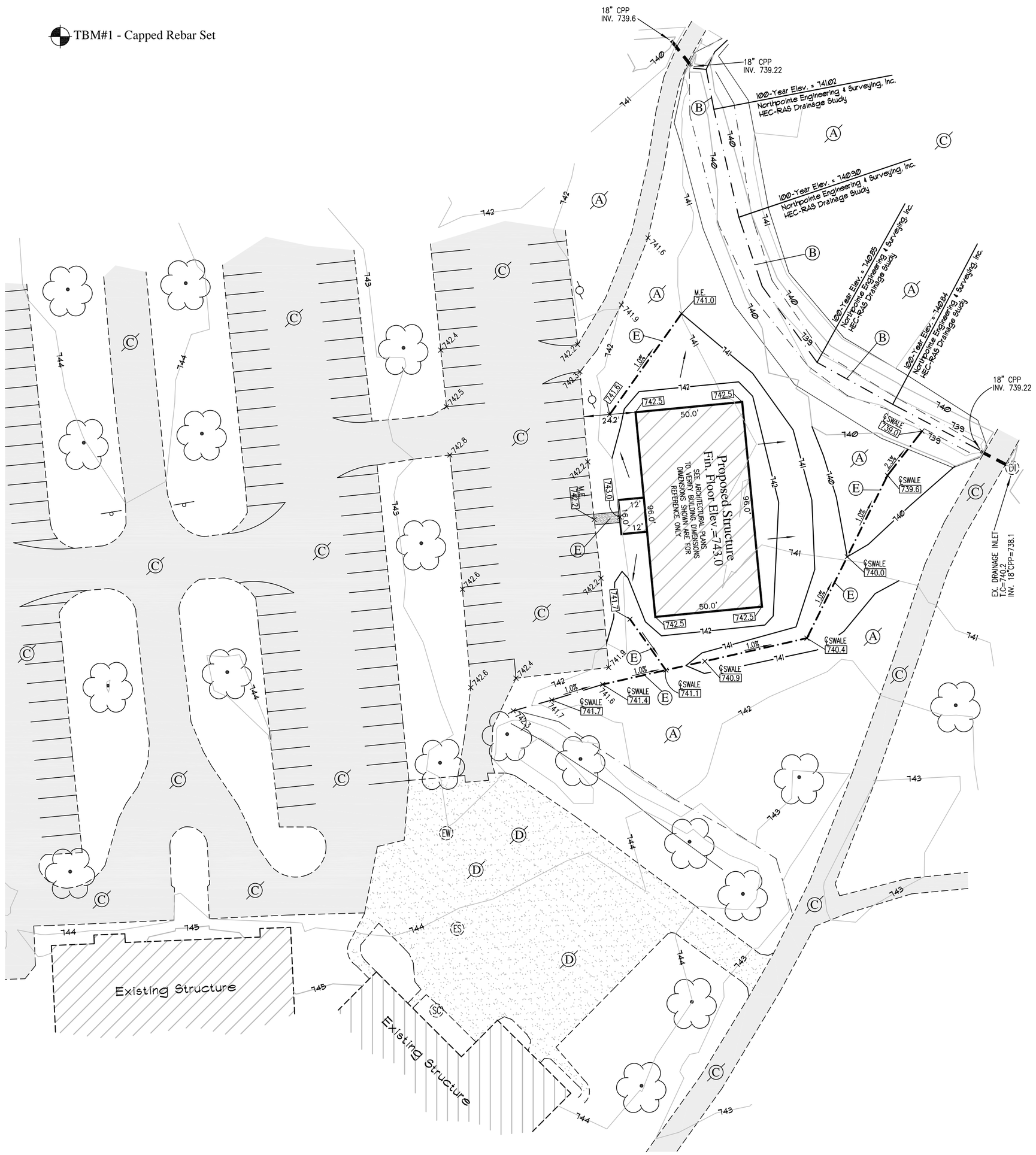

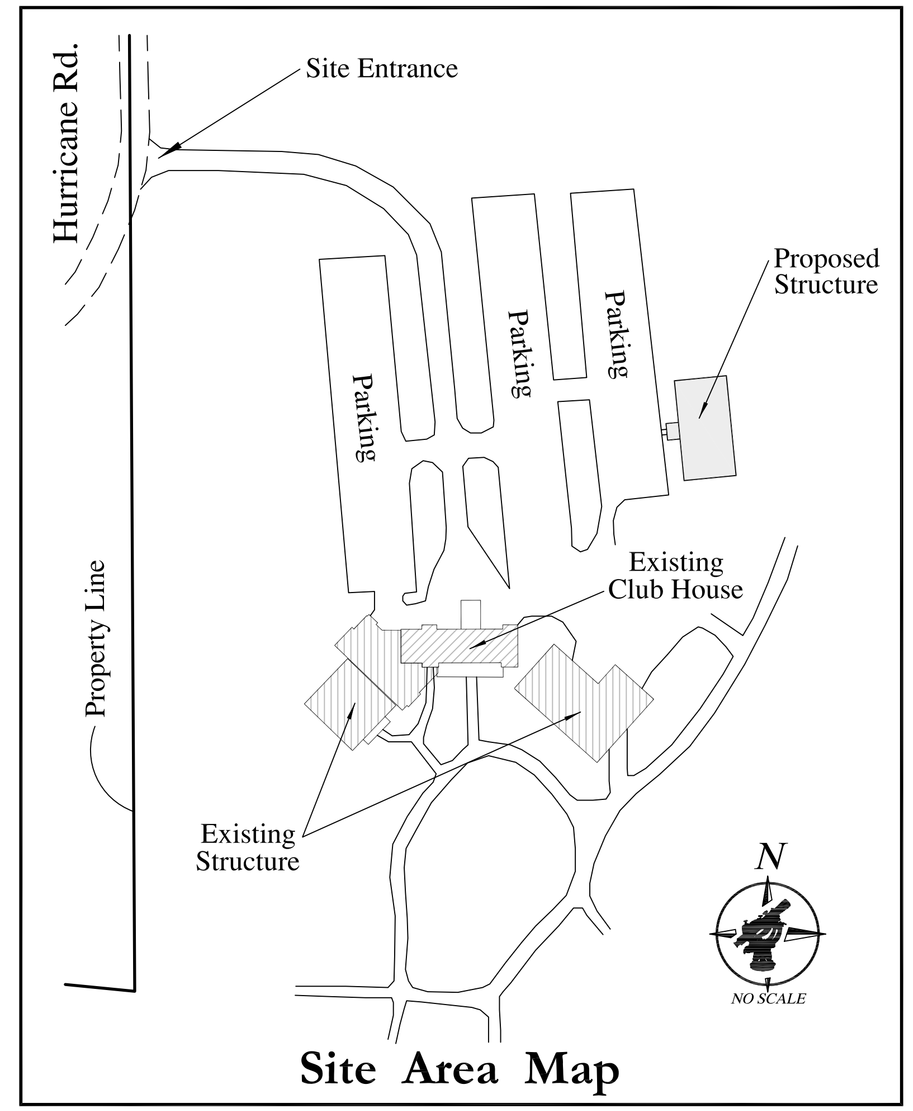

Site Area Map

DEVELOPMENT NOTES

1. ALL WORK SHALL CONFORM TO STATE AND LOCAL REGULATIONS.
2. THE CONTRACTOR SHALL VERIFY ALL DIMENSIONS IN THE FIELD AS SHOWN ON THIS PLAN PRIOR TO STARTING CONSTRUCTION. IF ANY DISCREPANCIES ARE FOUND IN THESE PLANS FROM FIELD CONDITIONS, THE CONTRACTOR SHALL NOTIFY THE ENGINEERS/SURVEYORS IMMEDIATELY.
3. CONTRACTOR SHALL NOTIFY ANY AND ALL UTILITY COMPANIES WITH UTILITIES PRESENT ON SITE 72 HOURS BEFORE STARTING CONSTRUCTION. CONTRACTOR SHALL HAVE UTILITY COMPANIES VERIFY (i.e. LOCATION, DEPTH AND SIZE) ALL UTILITIES WITHIN LIMITS OF CONSTRUCTION.
4. ALL UTILITY SERVICES INTO THE PROPOSED BUILDING SHALL BE COORDINATED BETWEEN CONTRACTOR, DEVELOPER, ARCHITECT AND THE RESPECTIVE UTILITY COMPANY UNLESS OTHERWISE SHOWN.
5. CONTRACTOR SHALL PROVIDE POSITIVE DRAINAGE IN ALL AREAS (GRASS/LANDSCAPE AND CONCRETE/PAVEMENT) WHEN SITE WORK IS COMPLETE. TESTS SHALL BE PERFORMED TO INSURE AND CORRECT, IF NECESSARY, ANY PONDING, "BIRD BATH" CONDITIONS.
6. CONTRACTOR SHALL RESURFACE AND/OR RECONSTRUCT BACK TO ITS ORIGINAL CONDITION, ANY AREAS DISTURBED BY CONSTRUCTION ACTIVITY AS WELL AS TRAFFIC FROM SUPPLIERS AND SUBCONTRACTORS AFTER CONSTRUCTION WORK IS COMPLETE.
7. ALL WATERLINE CONSTRUCTION, RELOCATION AND SERVICE INTO THE PROPOSED BUILDING SHALL BE DONE IN ACCORDANCE WITH LOCAL WATER COMPANY STANDARDS AND SPECIFICATIONS.
8. ALL CONSTRUCTION ACTIVITY ON THIS SITE SHALL BE PERFORMED IN COMPLIANCE WITH APPLICABLE O.S.H.A. STANDARDS FOR WORKER SAFETY.
9. ALL CONTRACTORS SHALL BE RESPONSIBLE FOR OBTAINING THE MOST UPDATED SET OF CONSTRUCTION PLANS PRIOR TO COMMENCING CONSTRUCTION.
10. THE CONTRACTOR IS RESPOSIBLE TO CALCUATE THEIR OWN DIRT QUATITIES TO DETERMINE A SITE BALANCE. tHE CONTRACTOR IS ALSO RESPONSIBLE TO CHECK EXISTING GRADES AGAINST PROPOSED GRADES TO DETERMINE ACCURACY OF DIRT TO BE MOVED ON THE SITE. ONCE THE CONTRACTOR MOVES ANY DIRT ON THE SITE THEY ARE RESPONSIBLE FOR ALL DIRT TO BE MOVED AT NO ADDITIONAL COST TO THE DEVELOPER OR ENGINEER.
11. ALL STORM SEWERS ARE TO BE PROVATELY OWNED AND MAINTAINED.
12. ALL INLET CASTINS SHALL HAVE "ENVIRONMENTALLY FRIENDLY LOGOS" FOR WATER QUALITY AWARENESS.
13. ALL SANITARY SEWER LATERALS SHOWN ARE TO BE 6-INCH PVC. NORMAL LATERAL SLOPE IS ¼-INCH PER FOOT. MINIMUM LATERAL SLOPE IS ⅛-INCH PER FOOT. MINIMUM COVER IS 4-FEET.

LEGEND

- DI -EXISTING STORM (BEEHIVE) INLET
- -EXISTING STORM SEWER
- ES -EXISTING SANITARY MANHOLE
- SC -EXISTING SANITARY CLEANOUT
- -EXISTING SANITARY SEWER
- +000.0 -EXISTING SPOT ELEVATION
- -EXISTING UTILITY POLE
- EW -EXISTING WELL
- -EXISTING STREET SIGN
- -EXISTING TREE

LEGEND

- SM -PROPOSED SANITARY MANHOLE
- CO -PROPOSED SANITARY CLEANOUT
- PW -PROPOSED WATERLINE
- -PROPOSED FIRE HYDRANT
- -PROPOSED WATERLINE TEE
- -PROPOSED WATERLINE BEND
- PWS -PROPOSED WATER SERVICE LINE
- 000.0 -PROPOSED GRADE
- -PROPOSED GRANULAR BACKFILL

LEGEND

- A - EXISTING GRASS AREA
- B - EXISTING DITCH
- C - EXISTING BITUMINOUS PAVEMENT
- D - EXISTING CONCRETE
- E - PROPOSED CONCRETE SIDEWALK (SEE DETAIL ON SHEET #12)
- F - PROPOSED SWALE

BENCHMARK: TBM#1

GPS - SPC System Indiana East Zone (NAD 83)

Capped Rebar Set with pink cap stamped "Northpointe Surveying, Inc. 20100076"

Trimble R8 Receiver on INDOT RTK Network Base (RTCM 0011) Using GEIOD 09 (Conus)

ELEVATION = NAVD 88 - 744.38

FLOOD HAZARD STATEMENT

The accuracy of any flood hazard data shown on this report is subject to map scale uncertainty and to any other uncertainty in location or elevation on the referenced Flood Insurance Rate Map. The surveyed parcel lies within Zone "X" as said land plots by scale on Community Panel No. 18081 C 0143 D of the Flood Insurance Rate Map for the City of Franklin, Johnson County, Indiana dated August 2, 2007.

PRO FORMA SURVEY

March 22, 2013

This drawing is not intended to be represented as a Retracemnt or Original Boundary Survey, a Route Survey, or a Surveyor Location Report

N

0 15 30 60

Bar Scale

Scale:1"=30'

PARKING CHART

GOLF COURSE:	45 HOLES
EMPLOYEES ON LARGEST SHIFT:	12
VEHICLES STORED ONSITE:	2
PARKING REQUIRED:	114 SPACES

20 SPACES PER 9 HOLES

1 SPACE PER EMPLOYEE ON LARGEST SHIFT

1 SPACE PER BUSINESS VEHICLES STORED ONSITE

PARKING PROVIDED:
188 SPACES

Septic - Well Note

ANY ONSITE WELL OR SEPTIC MUST BE PROPERLY ABANDONED WITH THE JOHNSON COUNTY HEALTH DEPARTMENT PERSONNEL

SITE UTILITY NOTE

SITE UTILITIES NEED TO BE LOCATED PRIOR TO CONSTRUCTION. UTILITIES MAY NEED TO BE RELOCATED TO ACCOMMODATE FOR THE PROPOSED STRUCTURE.

Indiana811
Know what's below. Call before you dig.

UTILITY STATEMENT:
THE EXISTING UNDERGROUND UTILITIES SHOWN HAVE BEEN LOCATED FROM VISIBLE FIELD EVIDENCE AND/OR EXISTING DRAWINGS. NORTHPOINTE INC. MAKES NO GUARANTEES THAT THE UTILITY INFORMATION SHOWN COMPRISES ALL SUCH UTILITIES IN THE AREA, IN SERVICE OR ABANDONED. NORTHPOINTE INC. FURTHER STATES THAT THE UNDERGROUND UTILITY DATA SHOWN DOES NOT INDICATE PRECISE LOCATIONS.

THIS DRAWING/COMPUTER FILE IS THE PROPERTY OF NORTHPOINTE SURVEYING INC. ANY REPRODUCTION OR REUSE OF THIS DOCUMENT FOR ANY PURPOSE OTHER THAN THE PROJECT FOR WHICH IT WAS ORIGINALLY INTENDED, WITH OR WITHOUT PERMISSION FROM NORTHPOINTE INC., BY ITS USE AGREES TO INDEMNIFY AND HOLD HARMLESS NORTHPOINTE FROM ANY LOSS, INCLUDING BUT NOT LIMITED TO ATTORNEY FEES, OCCURRING FROM THEIR USE.

03-22-13 DONNA JO SMITHERS REGISTERED No. 20100076 STATE OF INDIANA LAND SURVEYOR Seal

03-22-13 VENUS L.L. THORNE REGISTERED No. 11200278 STATE OF INDIANA PROFESSIONAL ENGINEER Seal

SCALE 1"=30'	
DRAWN BY	
CHECKED BY	DJS

PREPARED FOR

The Legends Indiana
2290 N. Hurricane Road
Franklin Indiana 46131

PROJECT NAME

The Legends of Indiana Building Expansion

City of Franklin, Johnson County, Indiana

SHEET TITLE

DEVELOPMENT PLAN

Engineering, Land Surveying Consulting & Inspection

Donna Jo Smithers
Professional Land Surveyor
President/ Owner

Venus L.L. Thorne
Project Engineer

Dane Wellman
Project Manager/ Field Operations

6125 South East Street, Suite "B"
Indianapolis, Indiana 46227-2147
Office: 317-784-5050
www.npes.biz

NORTHPOINTE ENGINEERING & SURVEYING, Inc.

Date: 03-22-2013

Job # 13-0018

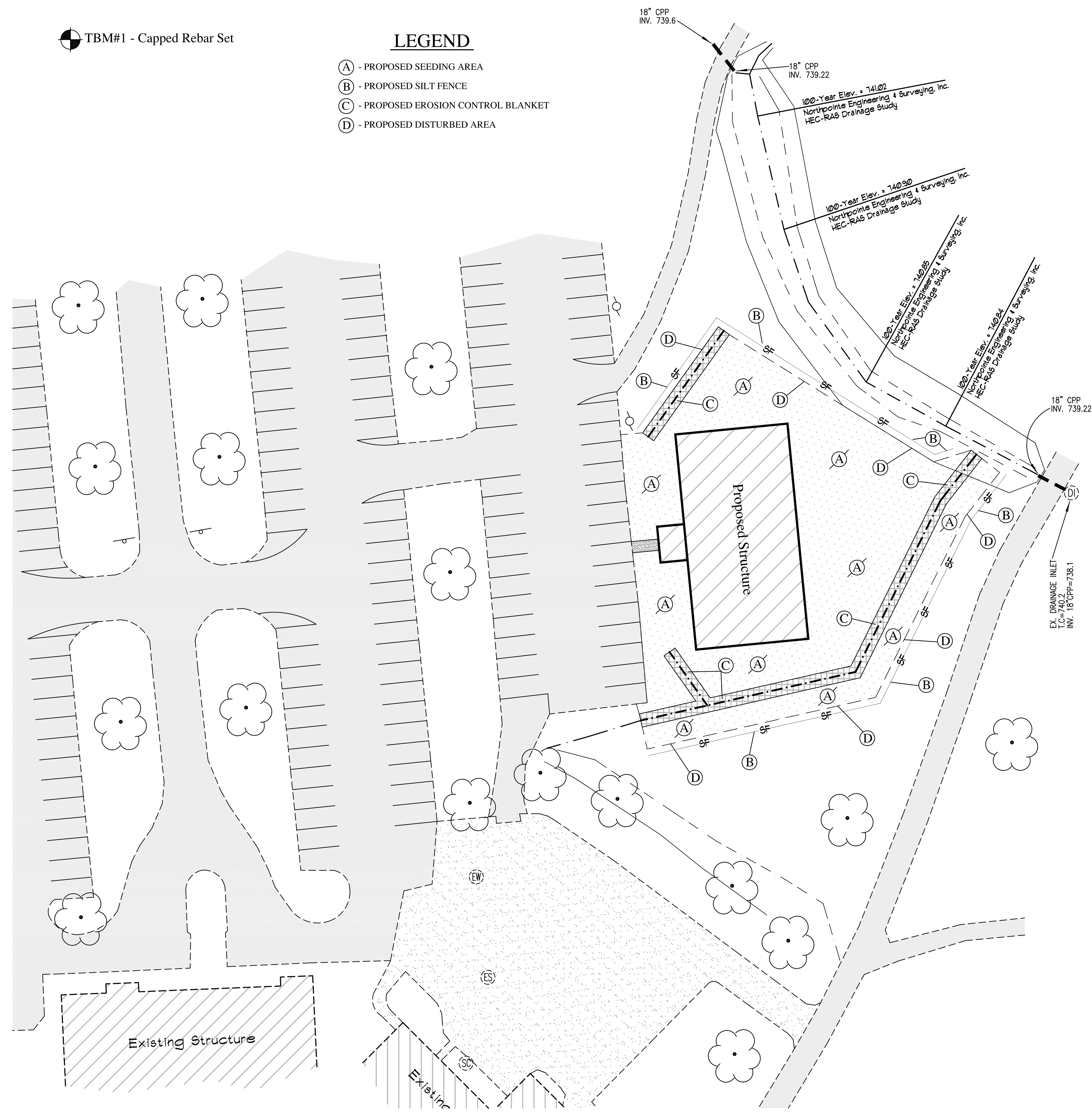

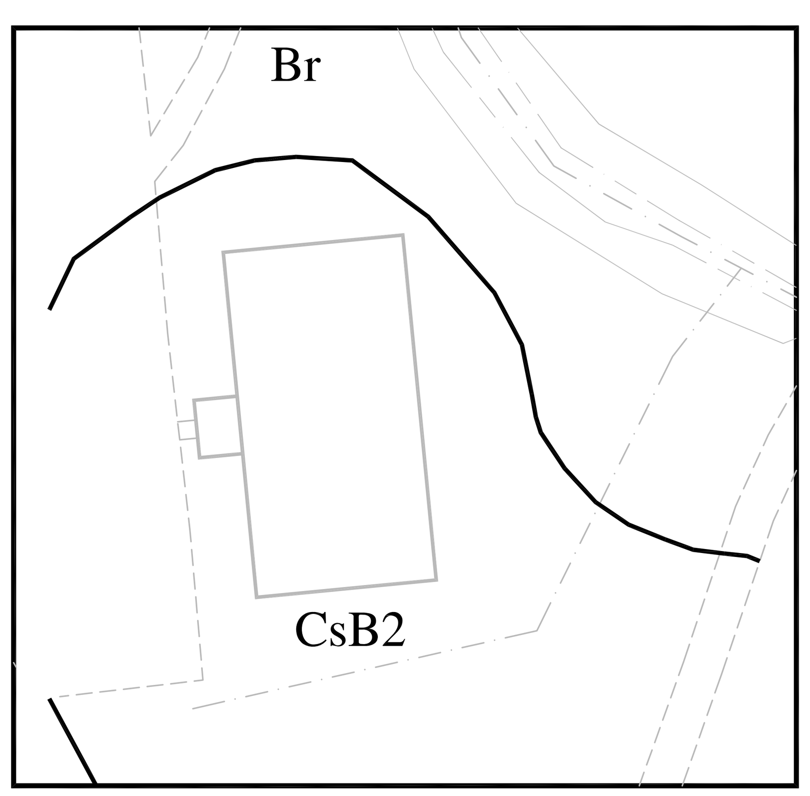

SOILS MAP

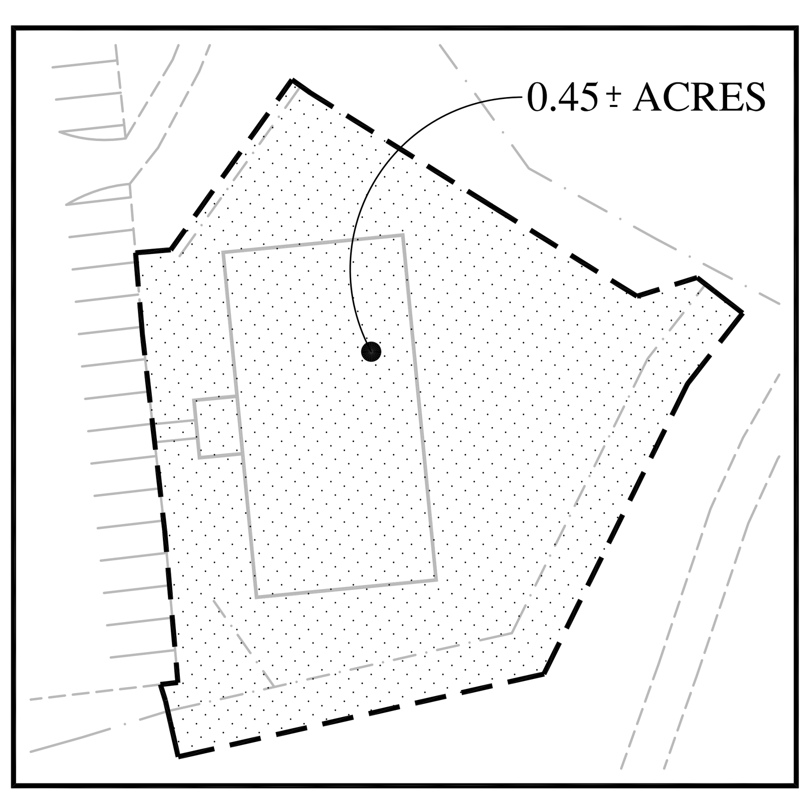

TOTAL DISTURBED AREA

PRO FORMA SURVEY
March 22, 2013
This drawing is not intended to be represented as a Retracemnt or Original Boundary Survey, a Route Survey, or a Surveyor Location Report

N
Scale: 1"=30'
0 15 30 60
Bar Scale

FLOOD HAZARD STATEMENT

The accuracy of any flood hazard data shown on this report is subject to map scale uncertainty and to any other uncertainty in location or elevation on the referenced Flood Insurance Rate Map. The surveyed parcel lies within Zone "X" as said land plots by scale on Community Panel No. 18081 C 0143 D of the Flood Insurance Rate Map for the City of Franklin, Johnson County, Indiana dated August 2, 2007.

PROJECT INDEX

Assessment of Construction Plan Elements (Section A)

A1 - Index showing locations of required Plan Elements
A2 - 11 by 17 inch plat showing building lot numbers/boundaries and road layout/names
- 11"x17" plat has been submitted with application.
A3 - Narrative describing the nature and purpose of the project
- Proposed Commercial Development in Franklin Township, Johnson County.
A4 - Vicinity map showing project location
- A Vicinity Map is shown on the Title Sheet for this set of plans.
A5 - Legal Description of the Project Site
- These improvement are part of the overall development of The Legends Golf Course
A6 - Location of all lots and proposed site improvements (roads, utilities, structures, etc.)
- The location of all proposed site improvements are as shown on the Site Development Plan.
A7 - Hydrologic unit code (14 digit)
- The Hydrologic unit code for this site is 05120201130110
A8 - Notation of any State or Federal water quality permits.
- No State or Federal water quality permits are required for this site.
A9 - Specific points where stormwater discharge will leave the site
- The stormwater runoff from this proposed development will sheet flow to the east the site into the existing detention.
A10 - Location and name of all wetlands, lakes, and watercourses on and adjacent to the site
- This proposed development lies within the Hurricane Creek Watershed. No wetlands or Lakes are on site or adjacent to the site.
A11 - Identification of all receiving waters
- This site lies within the Hurricane Creek Watershed.
A12 - Identification of potential discharges to ground water (abandoned wells, sinkholes, etc.)
- No discharge to ground water will occur. Runoff from the site will be routed via the proposed detention
A13 - 100-year floodplains, floodways, and floodway fringes
- None exist for this site.
A14 - Pre-construction and post construction estimate of Peak Discharge (10-year storm event)
- The pre-development peak discharge for the 10-year storm event = 0.32 cfs
- The post-development peak discharge for the 10-year storm event = 0.55 cfs
A15 - Adjacent land use, including upstream watershed
- Residential Use to the East and West. Business to the North and South.
A16 - Locations and approximate boundaries of all disturbed areas (Construction Limits)
- See detail this sheet, which depicts the total disturbed area for the site
A17 - Identification of existing vegetation cover
- The existing vegetation for this site is vacant farm land.
A18 - Soils map including soil descriptions and limitations Per Indiana Erosion Control Manual
- See Soils Map this sheet
- MnB2, Miami silt loam 0 to 2 percent slopes, moderate limitations for small commercial buildings due to wetness and low strength.
Appropriate compaction will beused to stabilize all proposed improvements.
A19 - Locations, size and dimensions of proposed stormwater systems (e.g pipes, swales and channels)
- No storm system is proposed for the plans.
A20 - Plans for any off-site construction activities associated with this project (sewer/water tie-ins)
- None
A21 - Locations of proposed soil stockpiles and/or borrow/disposal areas
- None
A22 - Existing site topography at an interval appropriate to indicate drainage patterns
- See the Existing Bondary & Topo sheet
A23 - Proposed final topography at an interval appropriate to indicate drainage patterns
- See the Development Plan

Assessment of Stormwater Pollution Prevention Plan (Section B)

B1 - Description of Potential pollutant sources associated with construction activities
- The potential pollutant sources associated with construction activities for this site would be material used for construction of the site, fuel storage areas, fueling locations, leaking vehicles and equipment, which could be exposed to the soils within the development. The contractor is urged to protect the site and maintain a single storage and fueling area on site. Although fuel leakage will happen, the contractor is urged to maintain this area so that pollutants to the soil is kept to a minimum. All pollutants that could enter the stormwater during construction would be routed through the existing pond, which is used for water quality.
B2 - Sequence describing stormwater quality measure implementation relative to land disturbing activities:
- Install perimeter sediment control measures (e.g. silt fence) Silt fence and appropriate erosion control measures shall be installed prior to any construction. Silt fence to be "NUTEC 2 NWS-6" or approved equal.
- Protect storm inlets immediately after installation
- All installed erosion and sediment control practices must be monitored at least weekly and again after each rain event. Any noted deficiencies must be corrected immediately.
- Any area of disturbed soil, which will remain inactive for 15 days or more must be seeded with the appropriate temporary vegetative covers. (see temp. seeding dates)
- The contractor/developer has full responsibility of inspecting the erosion control measures on a daily basis. At a minimum, practices need to be inspected weekly, after each storm event, and daily during prolonged storm events. Inspection of practices during a storm event is advantageous because the inspector can easily identify where measures need to be repaired or replaced. Failing practices should be repaired or replaced immediately. - Builders are to coordinate staging of erosion control as per detail labeled "Construction Sequence of Building Site Erosion Control Practices"
- Developers and Contractors must meet the design criteria, standards and specifications outlined in the Indiana Handbook for Erosion Control in Developing Areas.
- Developer to place permanent seed on all side and rear easement areas and temporary seed in all other areas, at appropriate time during construction
- Johnson County and the State has the right to require additional erosion control measures in the field as conditions warrant.
- See sheet 8 of 9 of these plans for installation, Application and methods for erosion control devices and practices.
- All slopes exposed during construction shall have SC-150 Erosion Control Blankets installed on them.
B3 - Stable construction entrance locations and specifications (at all points of ingress and egress)
- Construction entrance are proposed as shown on this sheet. See Detail Sheets for specifications.
B4 - Sediment control measures for sheet flow areas
- This plan shows the proposed seeding and sequence for these areas.
B5 - Sediment control measures for concentrated flow areas
- All swale and street areas will maintain a concentrated flow. This plan shows the proposed seeding and sequence for these areas along with the proposed inlet protection.
B6 - Storm sewer inlet protection measures, locations and specifications
- Inlet protection is shown on this plan. See Details for specifications.
B7 - Runoff control measures (e.g. diversions, rock check dams, slope drains, etc.)
- Sediment in run-off water shall be trapped by the use of such methods as debris basins and silt traps until the disturbed area is stabilized.
B8 - Storm water outlet protection specifications
- Rip-rap is proposed at all outlet points as shown on this plan.
B9 - Grade stabilization structures, locations and specifications
- These items are not proposed within this development
B10 - Location, dimensions, specifications, and construction details of each stormwater quality measure
- All proposed measures are as shown on this plan, details of each measure are shown on sheet 8.
B11 - Temporary surface stabilization methods appropriate for each season (including sequencing)
- Temporary surface stabilization is as shown on this plan
B12 - Permanent surface stabilization specifications (include sequencing)
- Permanent surface stabilization is as shown on this plan
B13 - Material handling and spill prevention plan
- The potential pollutant sources associated with construction activities for this site would be material used for struction of the site, fuel storage areas, fueling locations, leaking vehicles and equipment, which could be exposed to the soils within the development. The contractor is urged to protect the site and maintain a single storage and fueling area on site. Although fuel leakage will happen, the contractor is urged to maintain this area so that pollutants to the soil is kept to a minimum. All pollutants that could enter the stormwater during contruction would be routed through the proposed water quality structure, which is used for water quality. Contractor to clean any spills immediately to protect the soils from pollutants.
The following procedures should be taken if a spill occurs: Contain the spill, if possible, to prevent additional spilled material from entering waters of the state Undertake activities needed to accomplish a spill response. As soon as possible, but with 2 hours of discovery, communicate a spill report to IDEM at 317-233-7745 Submit a spill report to IDEM if requested.
B14 - Monitoring and maintenancing guidelines for each proposed stormwater quality measure
- The contractor/developer has full responsibility of inspecting the erosion control measures on a daily basis. At a minimum, practices need to be inspected weekly, after each storm event, and daily during prolonged storm events. Inspection of practices during a storm event is advantageous because the inspector can easily identify where measures need to be repaired or replaced. Failing practices should be repaired or replaced immediately. A written self inspection log log shall be kept and made available to reviewing authorities within 48 hours of request.
B15 - Erosion & sediment control specifications for individual building lots
- Builders are to coordinate staging of erosion control as per detail labeled "Construction Sequence of Building Site Erosion Control Practices"
- Developers and Contractors must meet the design criteria, standards and specifications outlined in the Indiana Handbook for Erosion Control in Developing Areas.
- A copy of the "Erosion Control For the Home Builder" brochure is to be provided to the purchaser of each lot at the time of sale.

ALL EROSION CONTROL MEASURES SHALL BE IN COMPLIANCE WITH THE INDIANA HANDBOOK FOR EROSION CONTROL IN DEVELOPING AREAS.

Indiana811
Know what's below. Call before you dig.

UTILITY STATEMENT:
THE EXISTING UNDERGROUND UTILITIES SHOWN HAVE BEEN LOCATED FROM VISIBLE FIELD EVIDENCE AND/OR EXISTING DRAWINGS. NORTHPOINTE INC. MAKES NO GUARANTEES THAT THE UTILITY INFORMATION SHOWN COMPRISES ALL SUCH UTILITIES IN THE AREA, IN SERVICE OR ABANDONED. NORTHPOINTE INC. FURTHER STATES THAT THE UNDERGROUND UTILITY DATA SHOWN DOES NOT INDICATE PRECISE LOCATIONS.

THIS DRAWING/COMPUTER FILE IS THE PROPERTY OF NORTHPOINTE SURVEYING INC. ANY REPRODUCTION OR REUSE OF THIS DOCUMENT FOR ANY PURPOSE OTHER THAN THE PROJECT FOR WHICH IT WAS ORIGINALLY INTENDED, WITH OR WITHOUT PERMISSION FROM NORTHPOINTE INC., BY ITS USE AGREES TO INDEMNIFY AND HOLD HARMLESS NORTHPOINTE FROM ANY LOSS, INCLUDING BUT NOT LIMITED TO ATTORNEY FEES, OCCURRING FROM THEIR USE.

PROJECT INDEX (CONTINUED)

Stormwater Pollution Prevention Plan - Post Construction Component (Section C)

C1 - Description of pollutants and their sources associated with the proposed land use
- The potential pollutants for this proposed land use are grease, oil, fertilizers, etc.
C2 - Sequence describing stormwater quality measure implementation
- Permanent stabilization (I.E. seeding, erosion control blanket) shall be implemented as construction disturbancies have been eliminated.
C3 - Description of proposed post construction stormwater quality measures
- Grass swales increase infiltration into the soil and the grass helps to take up nutrients in run-off.
C4 - Location, dimensions, specifications, and construction details of each stormwater quality measure.
- All proposed measures are as shown on this plan, details of each measure are shown on the Details Sheet
C5 - Description of maintenance guidelines for post construction stormwater quality measures
- Proposed storm sewer inlets shall be monitored to ensure sediment accumulation does distract from proper flow/function. All grass areas to be monitored to ensure a vigorous vegatative growth.

TEMPORARY SEEDING DATES

	JAN	FEB	MAR	APR	MAY	JUN	JUL	AUG	SEP	OCT	NOV	DEC
WHEAT or RYE												
OATS												
ANNUAL RYE GRASS												

PERMANENT SEEDING DATES

	JAN	FEB	MAR	APR	MAY	JUN	JUL	AUG	SEP	OCT	NOV	DEC
NON-IRRIGATED*												
IRRIGATED												
DORMANT SEEDING**												

IRRIGATION NEEDED DURING THIS PERIOD, TO CONTROL EROSION AT TIMES OTHER THAN IN THE SHADED AREAS, USE MULCH.

* LATE SUMMER SEEDING DATES MAY BE EXTENDED 5 DAYS IF MULCH IS APPLIED.

** INCREASE SEEDING RATE BY 50 PERCENT.

SEEDING LEGEND

TEMPORARY SEED: *SEE NOTE BELOW FOR AREAS TO BE SEEDED.*

ALL BARE AREAS SCHEDULED TO BE LEFT IDLE FOR 15 DAYS OR MORE MUS BE STABLILISED WITH TEMPORARY SEEDING AND/OR MULCHING.

ANNUAL RYEGRASS AT 1 LB. PER 100 SQ. FT.
STRAW MULH AT 2 TONS PER ACRE

PERMANENT SEED:

KENTUCKY BLUEGRASS AT 40 LBS. PER ACRE
CREEPING RED FESCUE AT 40 LBS. PER ACRE
STRAW MULCH AT 2 TONS PER ACRE

TEMPORARY SEED:

ANNUAL RYGRASS AT 40 LBS. PER ACRE
SPRING OATS AT 100 LBS. PER ACRE

SEEDING NOTE:

- ALL TEMPORARY SEEDING SHALL BE DONE IN ACCORDANCE WITH SECTION 3.11 OF THE "INDIANA HADNBOOK FOR EROSION CONTROL IN DEVELOPING AREAS"
- ALL PERMANENT SEEDING SHALL BE DONE IN ACCORDANCE WITH SECTION 3.12 OF THE "INDIANA HADNBOOK FOR EROSION CONTROL IN DEVELOPING AREA

EROSION CONTROL PLAN LEGEND

(SB) SAND BAGS
SF SILT FENCE
ROCK RIP RAP
EROSION CONTROL BLANKET
ROCK CHECK DAM
(IP) SILT FENCE INLET PROTECTION
TEMPORARY CONSTRUCTION ACCESS ROAD

ADDITIONAL NOTES:

- THE SILT FENCE AND APPROPRIAT EROSION CONTROL SHALL BE INSTALLED PRIOR TO ANY CONSTRUCTION
- ALL SLOPES EXPOSED DURING CONSTRUCTION SHALL HAVE SC-150 EROSION CONTROL BLANKETS INSTALLED ON THEM.
- ALL SILT FENCE MATERIAL SHALL BE "NUTEC 3 NWS-6 OR APPROVED EQUAL

* PERSON RESPONSIBLE FOR THE INSTALLATION AND MAINTENANCE OF ALL EROSION CONTROL MEASURES:

Ted Bishop
DHB Golf
2290 North Hurricane Road
Franklin, Indiana 46131

ADDITIONAL EROSION CONTROL MEASURES MAY BE REQUIRED BY STATE OR COUNTY OFFICIALS.

NORTHPOINTE ENGINEERING & SURVEYING, Inc.

Engineering, Land Surveying Consulting & Inspection

Donna Jo Smithers
Professional Land Surveyor
President / Owner

Venus L.L. Thorne
Professional Engineer

Dane Waltman
Project Manager / Field Operations

6125 South East Street, Suite "B"
Indianapolis, Indiana 46227-2147
Office - 317-884-3020
www.npes.biz

PROJECT NAME
The Legends of Indiana Building Expansion
City of Franklin, Johnson County, Indiana

SHEET TITLE
EROSION CONTROL PLAN

PREPARED FOR
The LEGENDS INDIANA
2290 N. Hurricane Road
Franklin Indiana 46131

SCALE 1"=30'
DRAWN BY
CHECKED BY DJS

03-22-13
VENUS L.L. THORNE REGISTERED No. 11200278 STATE OF INDIANA PROFESSIONAL ENGINEER
Seal

03-22-13
DONNA JO SMITHERS REGISTERED No. 20100076 STATE OF INDIANA LAND SURVEYOR
Seal

Date: 03-22-2013
Job # 13-0018

A. NOTICES AND PERMITS

1. The contractor shall be responsible for obtaining or verifying that all permits and approvals are obtained from the respective town, county and state agencies prior to starting construction.

2. It shall be the Contractor's responsibility to determine the exact location of all existing utilities in the vicinity of the construction area prior to starting construction.

3. It shall be the Contractor's responsibility for notification and coordination of all construction with the respective utility companies.

4. It shall be the responsibility of the Developer and Contractor to maintain quality control throughout the project; failure to do so may result in removal and replacement of the defective work. It is recommended that the Developer have a qualified inspector on the job site at all times during construction.

5. It is essential that the work to be done in conjunction with this project shall be installed according to these specifications. The Engineer will be required to certify to certain portions of this project upon completion. Therefore, it is necessary to obtain approval and acceptance by the City of Franklin and Johnson County that construction was done in compliance with these plans and specifications.

B. CLEARING AND GRUBBING

1. Clearing and grubbing shall consist of cutting, removal and satisfactory disposal of all trees, down timber, brush, projecting roots, stumps, rubbish, boulders, broken concrete, fencing (as designated) and other material on the project site and within the boundary as shown on the Construction Documents and/or as designated by "Construction Limits".

2. Special care shall be taken to insure that the trees to be left remaining in the projeq area shall not receive limb, bark or root injuries. When such injuries occur, all rough edges of scarred areas shall be removed in accordance with accepted horticultural practice and the scars coated thoroughly with an asphaltum base tree paint.

C. STRIPPING OF TOPSOIL

1. The Contractor shall verify that all topsoil has been removed in the areas to be occupied by road, walks and designated building areas. Topsoil shall be removed to a depth of six (6) inches or deeper, if necessary, to remove vegetable matter where required.

2. Topsoil shall be kept separated from suitable fill materials and shall not be used as fill under pavement and/or building areas.

3. Topsoil shall be stored at a location where is does not interfere with construction operations. Excess topsoil shall be used for finish grading on site of drainage swales, yards of new residences, buffer strips, etc.

4. Topsoil shall be reasonably free from subsoil debris and stones.

D. GRADING

1. The Contractor shall perform all grading operations to bring subgrades, after final compaction, to the required grades and sections for site improvement.

2. Subgrade shall be proofrolled with suitable equipment and all spongy and otherwise unsuitable material shall be removed and replaced with suitable material.

3. Subgrade shall be prepared in compliance with most current I.N.D.O.T. standard specifications and as per the Town of Whiteland Ordinance.

4. ~~See PAVEMENT CONSTRUCTION~~

5. All fill material shall be formed from soil free of deleterious material. Prior to placement of fill a sample of the proposed fill material should be submitted to the Soils Engineer for his approval.

6. All fill material in areas outside building and pavement areas shall be compacted lightly and protected from erosion by one or more of the methods of Item G. Areas where building and pavement construction is feasible shall not have unsuitable material placed in that location and fill shall be compacted to 95% Standard Proctor or better. These areas shall be determined by the Developer's representative.

E. EROSION PROTECTION DURING CONSTRUCTION

1. The Contractor shall provide adequate erosion protection measure during construction such as, but not limited to:

   a. Siltation basins

   b. Silt traps

   c. Straw bale dams

   d. Soil cement

   e. Mulch and seeding

   f. Soil stabilization fabric

   g. Jute netting

2. Details and placement specifications for the above items are available on request from the Engineer.

3. See "Erosion Control Plan" and Details for more erosion control measures.

4. All erosion control practices shall be in accordance with the IDNR INDIANA STORMWATER QUALITY MANUAL

F. STORM SEWER CONNECTION

1. Storm sewer structures shall comply with current specifications of the City of Franklin, County and all agencies in respect to design and quality of construction.

2. All storm sewer construction inside public right-of-way, either existing or to be dedicated, shall be in accordance with the most current I.N.D.O.T. Specifications.

3. Where reinforced concrete pipe is shown on the construction plans, it shall be in accordance with A.S.T.M. C-76 Class III Wall "B" unless otherwise specified on the plans.

4. Manholes, catchbasins and inlets will be precast structures. Precast concrete and steel for manholes and inlets shall be in accordance with A.S.T.M. C-478.

5. Castings shall be as shown on the detail sheet(s) for manufacturer, type and model number.

G. UTILITIES

1. WATER SERVICE:

   a. The contractor shall coordinate all waterline construction with the utility, City of Franklin. The contractor shall install only the water mains, valves, fire hydrants and other mainline appurtenances. The utility shall install all service crossings, corporation stops, meter pits and meters.

   b. All PVC pipe used on this project shall meet ASTM-D 2241 Standard and bear the National Sanitation Foundation seal of approval.

   c. Solvent-weld joint PVC pipe is not to be used. Only "slip on" gasket joints are acceptable.

   d. See Sanitary Sewers for vertical and horizontal separations (Note F-8-a and b).

   e. The water mains are to be installed at a minimum 54" of cover to prevent freezing. This includes casing pipe to carry mains under streets.

   f. The Contractor shall be responsible for leakage tests on the water mains carried out following procedures outlined by applicable American Water Works Association Standards and meet the leakage requirements designated therein. Certificate copies of the test results shall be submitted to the utility engineer.

   g. The Contractor shall be responsible for disinfection of the new pipe following procedures outlined by applicable American Water Works Association Standards and produce bacteriologically satisfactory water in two successive sets of samples collected at 24 hour intervals before the new construction is released for use.

   h. All water lines from the Town of Whiteland main to the building shall be either cast iron, ductile iron or copper and shall be installed in accordance with the Town of Whiteland specifications.

   i. Granular backfill shall be required for all utility crossings under and within 5' of pavement area. (See Section J).

   j. All water lines shall be in accordance with the specifications of the Town of Whiteland and the Indiana State Board of Health.

   k. A continuous #12 wire shall be placed in trench with PVC water main at least 18" below grade.

2. ELECTRIC, TELEPHONE AND TELEPHONE:

   a. Conduit shall be required for all crossings under pavement areas.

   b. Granular backfill shall be required for all crossings under pavement areas.

   c. Concrete pads for electric and telephone transformers shall be set at the approximate ground grade as shown on the Site Development Grading Plans for the respective locations.

   d. The Contractor shall be responsible for coordinating with each utility their installation of any lines or conduits or any other equipment required in the project. The utilities shall be notified prior to the placement of pavement a minimum of 48 hours so that they might install any crossings.

H. GRANULAR BACKFILL

SHALL BE IN ACCORDANCE WITH I.N.D.O.T. STANDARD SPECIFICATIONS, 1999 EDITION, AS REVISED. The material shall be Compacted aggregate No. 53 under or within 5 feet of all pavement per the Town of Whiteland.

I. Concrete Curb and Walks

1. See detail sheet for type and details.
2. Concrete shall be ready mixed portland cement conforming to a.s.t.m. c-150 and water. aggregate shall conform to a.s.t.m. c-33. concrete shall be 6 bag class "a" with compressive strength of concrete at 28 days being minimum 4000 p.s.i. where required,
3. Reinforcement
   A. Welded wire fabric shall conform to a.s.t.m. a-185
   B. Reinforcing steel shall conform to a.s.t.m. a-615
4. Application
   A. Place concrete only on a moist, compacted subgrade or base free from loose material. place no concrete on muddy or frozen subgrade.
   B. Concrete shall be deposited so as to require as little rehandling as practicable. when concrete is to be placed at an atmospheric temperature of 35 degrees f or less I.N.D.O.T. Specifications, 1999 edition as revised shall apply.
   C. Except as otherwise specified, cure all concrete by one of the methods described in I.N.D.O.T. Specifications, 1999 editions, as revised.

E2. Breakdown rolling: accomplish breakdown or initial rolling immediately following rolling of joints and outside edge. check surface after breakdown rolling, and repair displaced areas by loosening and filling, if required, with hot material.

E3. Second rolling: follow breakdown rolling as soon as possible, which mixture is hot. continue second rolling until mixture has been thoroughly compacted.

E4. Finish rolling: perform finish rolling while mixture is still warm enough for removal of roller marks. continue rolling until roller marks are eliminated and course has attained maximum density.

E5. Patching: remove and replace paving areas mixed with foreign materials and defective areas. cut out such areas and fill with fresh, hot bituminous aggregate mix. compact by rolling to maximum surface density and smoothness.

E6. Protection: after final rolling, do not permit vehicular traffic on pavement until it has cooled and hardened.

E7. Erect barricades to protect paving from traffic until mixture has cooled enough not to become marked.

F. TRAFFIC AND LANE MARKINGS

F1. Cleaning: sweep and clean surface to eliminate loose material and dust.

F2. Stripping: use chlorinated rubber base traffic lane-marking paint, factory-mixed, quick-drying, and non-bleeding.

color: yellow.

1. Do not apply traffic and lane marking paint until layout and placement has been verified with architect/engineer.

2. Apply paint with mechanical equipment to produce uniform straight edges. apply in two coats at manufacturer's recommended rates.

G. FIELD QUALITY CONTROL

G1. Testing and Inspection Service:

1. Owner shall employ a testing laboratory to perform pavement testing and inspection service for quality control during paving operations.

2. Testing service shall have representative present to observe and perform tests at all times paving work is in progress.

G2. General: testing service representative shall take a minimum of two samples per lift of bituminous aggregate mix each day before paving operation. laboratory test shall be performed on these samples to determine aggregate gradation and asphalt content.

1. Test in-place compacted bituminous aggregate mix courses for compliance with requirements for thickness, density and air voids and surface smoothness. repair or remove and replace unacceptable paving as directed by engineer.

G3. Thickness: in-place compacted thickness will not be acceptable if exceeding following allowable variation from required thickness:

aggregate base course: 1/2", plus or minus.
base course: 1/2", plus or minus.
binder course: 1/4", plus or minus.
surface course: 1/4", plus or minus.

1. A minimum of two pavement cores per compacted lift shall be taken. cores are to be taken at locations and at times of day as directed by the testing service. the following tests shall be performed by the testing service, on each pavement core:

PAVEMENT THICKNESS
DENSITY
AIR VOIDS

2. Testing service shall submit certified results to the owner and architect/engineer within 72 hours after tests are made, with their comments and recommendations for action.

3. Pavement which fails to comply with approved job mix formula shall be replaced as directed by the architect/engineer.

G4. Surface smoothness: test finished surface for smoothness, using 10' straightedge applied

J. Finish Grading and Seeding

1. Over the approved rough grade (see section e), spread 4" minimum of topsoil or approved fill to such depth as will finish to the required finish grades and contours after rolling and natural settlement. new grades shall slope uniformly between levels established on the plans and intersections of new grades with existing grades shall be uniform and smooth.
2. Fertilizer and agricultural limestone shall be spread uniformly over the area to be seeded. they shall be mixed into the top 2" of soil with a disk harrow, rotary tiller or other approved equipment. fertilizer shall be spread at the rate of 800 pounds per acre and agricultural limestone at the rate of 1/2 ton per acre unless otherwise specified.
3. Temporary seeding- the areas where stripping, cuts or fills have been graded shall be seeded for silt and erosion protection with one of the following methods:

A. Early spring mix: 100% oats
   seeding rate: 50 lbs./acre
B. Spring or late fall mix: 100% annual rye
   seeding rate: 50 lbs./acre
C. Fall mix: 100% perennial rye
   seeding rate 50 lbs./acre
   straw or mulch as approved by the engineer shall be applied at a rate of 2 tons per acre.

4. Mulch-seeding: mulch-seeding shall be as per i.d.o.h specifications, section 621, dated 1988. fertilizer shall be 12-12-12 applied at the rate of 400 pounds per acre. seed mixture shall be 60 pounds per acre of perennial rye grass and 60 pounds per acre of kentucky 31 fescue or alta fescue.

03-22-13
DONNA JO SMITHERS
REGISTERED
No. 20100076
STATE OF INDIANA
LAND SURVEYOR
Seal

03-22-13
VERNIS L.L. THORNE
REGISTERED
No. 11200278
STATE OF INDIANA
PROFESSIONAL ENGINEER
Seal

SCALE	N/A
DRAWN BY	
CHECKED BY	DJS, VT

PREPARED FOR

The Legends Indiana
2290 N. Hurricane Road
Franklin Indiana 46131

PROJECT NAME

The Legends of Indiana
Building Expansion

City of Franklin, Johnson County, Indiana

SHEET TITLE

SPECIFICATIONS

Engineering, Land Surveying
Consulting & Inspection

Donna Jo Smithers
Professional Land Surveyor
President / Owner

Vernis L.L. Thorne
Professional Engineer

Dane Waltman
Project Manager / Field Operations

6125 South East Street, Suite "B"
Indianapolis, Indiana 46227-2147
Office - 317-884-5020
www.npsi.biz

NORTHPOINTE ENGINEERING & SURVEYING, Inc.

Date: 03-22-2013

Job # 13-0018

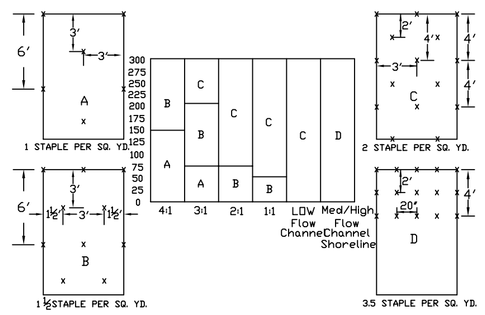

NOTE:
HORIZONTAL STAPLE SPACING SHOULD BE ALTERED IF NECESSARY TO ALLOW STAPLES TO SECURE THE CRITICAL POINTS ALONG THE CHANNEL SURFACE.

CRITICAL POINTS
A. OVERLAPS AND SEAMS
B. PROJECTED WATER LINE
C. CHANNEL BOTTOM SIDE SLOPE VERTICES

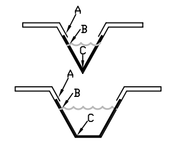

GENERAL STAPLE PATTERN AND RECOMMENDATIONS

STEP 1. EVALUATE THE SITE.

Before construction, evaluate the entire site, marking for protection any important trees and associated rooting zones, unique areas to be preserved, on site septic system absorption fields, and vegetation suitable for filter strips, especially in perimeter areas.

Identify Vegetation To Be Saved.
–Select and identify the trees, shrubs, and other vegetation that you want to save (see "Vegetative Filter Strips" under Step 2 below).

Protect Trees and Sensitive Areas.
–To prevent root damage, do not grade, burn, place soil piles, or park vehicles near trees or in areas marked for preservation.
–Place plastic mesh or snow fence barriers around the tree's dripline to protect the area below their branches.
–Place a physical barrier, such as plastic fencing, around the area designated for a septic system absorption field (if applicable).

STEP 2. INSTALL PERIMETER EROSION AND SEDIMENT CONTROLS.

Identify the areas where sediment–laden runoff would leave the construction site, and install perimeter controls to minimize the potential for off–site sedimentation. It's impor tant that perimeter controls are in place before any other earth–moving activities begin.

Protect Down–Slope Areas.
With Vegetative Filter Strips
–On slopes of less than 6 percent, preserve a 20 to 30 foot wide vegetative buffer strip around the perimeter of the property, and use it as a filter strip for tapping sediment.
–Do not now filter strip vegetation shorter than 4 inches.
With Silt Fence
–Use silt fencing along the perimeter of the lot's downslope side(s) to trap sediment(see Exhibit #3).

Install Gravel Drive.
–Restrict all lot access to this drive to prevent vehicles from tracking mud onto roadways (see Exhibit #4)

Protect Storm Sewer Inlets.
–Protect nearby storm sewer drop inlets with stone–filled or gravel–filled geottextile bags (see Exhibit #1) or equivalent measures before disturbing soil.
–Protect nearby storm sewer curb inlets with stone–filled or material (see Exhibit #2), straw bales, or equivalent mea– sures before disturbing soil.

CONSTRUCTION SEQUENCE FOR BUILDING SITE EROSION CONTROL PRACTICES

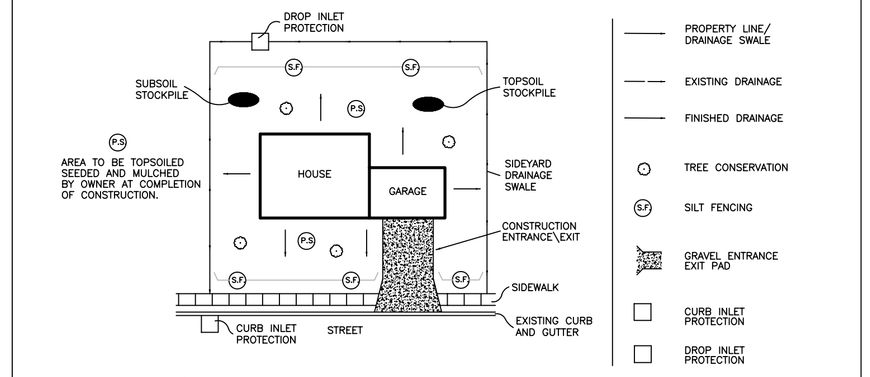

NOTE: 1. EROSION/SEDIMENT CONTROL MEASURES MUST BE FUNCTIONAL AND BE MAINTAINED THROUGHOUT CONSTRUCTION.
2. MAINTAIN POSITIVE DRAINAGE AWAY FROM THE STRUCTURE(S).

SAMPLE EROSION/SEDIMENT CONTROL PRACTICE PLAN FOR A TYPICAL ONE–OR TWO–FAMILY DWELLING UNDER CONSTRUCTION

STEP #3. PREPARE THE SITE FOR CONSTRUCTION.

Prepare the site for construction and for installation of utilities. Make sure all contractors (especially the excavat– ing contractor) are aware of areas to be protected.

Salvage and Stockpile the Topsoil/Subsoil.
–Remove topsoil (typically the upper 4 to 6 inches of soil material) and stockpile.
–Remove subsoil and stockpile separately from the topsoil.
–Locate the stockpile away from any downslope street, driveway, stream, lake, wetland, ditch, or drainageway.
–Immediately after stockpiling, temporary–seed the stock– piles with anual rye or winter wheat and/or place sedi– ment barriers around the perimeter of the piles.

STEP 4. BUILD THE STRUCTURE(S) AND INSTALL THE UTILITIES.

Construct the home and install the utilities; also install the sewage disposal system and drill the water will (if ap– plicable); then consider the following.

Install Downspout Extenders.
–Although not required, downspout extenders are highly recommended as a means of preventing lot erosion from roof runoff.
–Add the extenders as soon as the gutters and downspouts are installed (see Exhibit #5).
–Be sure the extenders have a stable outlet, such as the street, sidewalk, or a well vegetated area.

STEP 5. MAINTAIN THE CONTROL PRACTICES.

Maintain all erosion and sediment control practices un– til construction is completed and the lot is stabilized.
–Inspect the control practices a minimum of twice a week and after each storm event, making any needed repairs immediately.
–Toward the end of each work day, sweep or scrape up any soil tracked onto roadways. Do not flush areas with water.
–By the end of the next work day after a storm event, clean up any soil washed off–site.

STEP 6. REVEGATE THE BUILDING SITE.

Immediately after all outside construction activities are completed, stabilize the lot with sod, seed, and /or mulch.

Redistribute the Stockpiled Subsoil and Topsoil.
–Spread the stockpiled subsoil to rough grade.
–Spread the stockpiled topsoil to a depth of 4 to 6 inches over rough–graded areas.
–Fertilize and lime according to soil test results of recom– mendations of a seed supplier of a professional landscap– ing constractor.

Seed of Sod Bare Areas.
–Contact local seed suppliers of professional landscaping contractors for recommended seeding mixtures and rates.
–Follow recommendations of a professional landscaping constractor for installation of sod.
–Water newly seeded/sodded areas everyday or two to keep the soil moist. Less watering is needed once grass is 2 inches tall.

Mulch Newly Seeded Areas.
–Spread straw mulch on newly seeded areas, using 1 1/2 to 2 bales of straw per 1,000 square feet.
–On flat or gently sloping land, anchor the mulch by crimp– ing it 2 to 4 inches into the soil. On step slopes, anchor the mulch with netting or tackifiers. An alternative to an– chored mulch would be the use of erosion control blan– kets.

STEP 7. REMOVE REMAINING TEMPORARY CONTROL MEASURES.

Once the sod and/or vegetation is well established, re– move any remaining temporary erosion and sediment con– trol practices, such as:
–Downspout extenders. (Or shorten to outlet onto the veg– etated areas, allowing for maximum infiltration).
–Storm sewer inlet portection measures.

EXHIBIT #3--SILT FENCE

1) Install parallel to the contour of the land.
2) Extend ends upslope enough to allow water to pond behind the fence.
3) Excavate a trench 4 inches wide and 8 inches deep.
4) Install fence with stakes on the downslope side.
5) Bury 12 inches of fabric in the trench, extending the bottom 4 inches toward the upslope side.
6) Backfill trench with soil material, and compact.
7) Join silt fence sections by overlapping sections and nailing with lathe to the nearest post.
8) Inspect twice a week and after each storm event, repairing as needed and removing sediment deposits when they reach one–half the fence height.

(NOTE: Silt fence has a life expectancy of 6 months to 1 year, whereas straw bale barriers have a limited life of 3 months or less.)

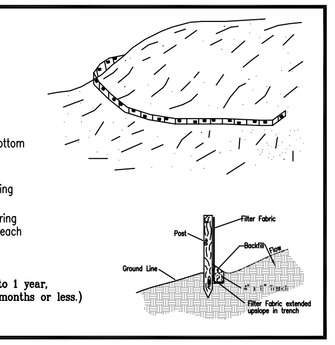

EXHIBIT #5--TEMPORARY DOWNSPOUT EXTENDERS

1. Install extenders as soon as gutters and down– spouts are installed to prevent erosion from roof runoff.
2. Use non–perforated (unslotted) drainage tile.
3. Route water to a stable grassed or paved area or to the storm sewer.
4. Remove after vegetation is established.

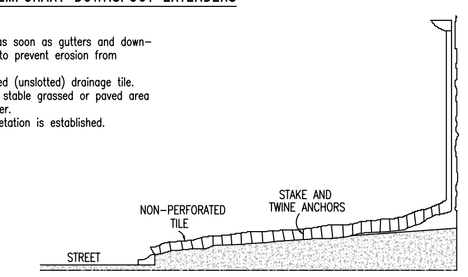

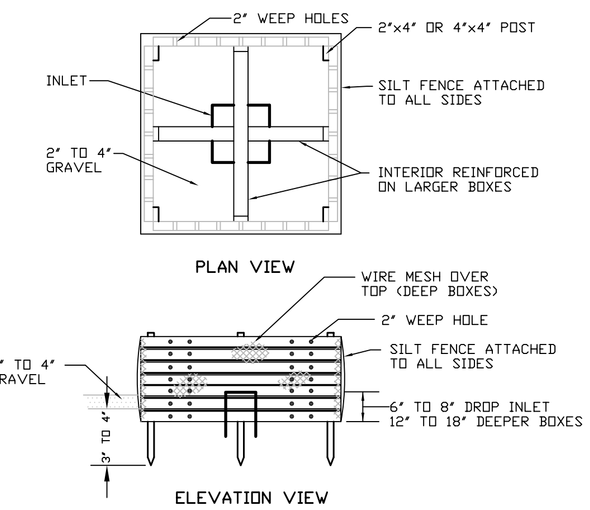

NOTE:
NO HOLES NEEDED ON BOXES MADE OF BOARDS SPACED 2' APART.
2' HOLES APPROX. 6' VERTICAL–6' HORIZONTAL ON PLYWOOD BOXES.
SILT FENCE FABRIC ATTACHED TO ALL SIDES OF BOX (COARSE WEAVE).
DIMENSIONS OF BOX WILL VARY ACCORDING TO THE SIZE OF INLET AND DEPTH BASE.
USE WIRE MESH OVER TOP OF DEEP HOLES.
SILT BOXES TO BE LOCATED AT EACH CATCH BASIN.

FILTER FENCE DETAIL

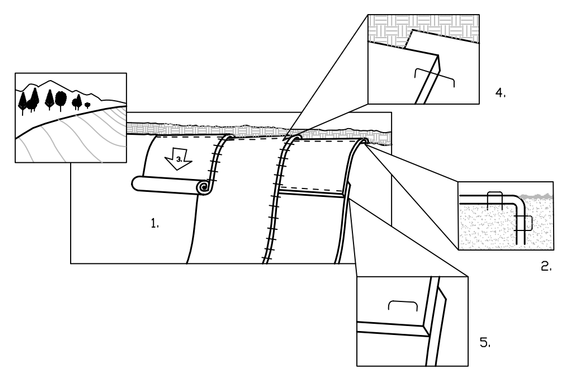

1. PREPARE SOIL BEFORE INSTALLING BLANKETS, INCLUDING APPLICATION OF LIME, FERTILIZER AND SEED. NOTE: WHEN USING SCC225, DO NOT SEED PREPARED AREA. AREA. SCC225 MUST BE INSTALLED WITH PAPER SIDE DOWN.
2. BEGIN AT THE TOP OF THE SLOPE BY ANCHORING THE BLANKET IN A 6' DEEP X 6' WIDE TRENCH. BACKFILL AND COMPACT THE TRENCH AFTER STAPLING.
3. ROLL THE BLANKETS DOWN THE SLOPE IN THE DIRECTION OF THE WATER FLOW.
4. THE EDGES OF PARALLEL BLANKETS MUST BE STAPLED WITH APPROXIMATELY 2' OVERLAP.
5. WHEN BLANKETS MUST BE SPLICED DOWN THE SLOPE, PLACE BLANKETS END OVER END (SHINGLE STYLE) WITH APPROXIMATELY 6' OVERLAP. STAPLE THROUGH OVER–LAPPED AREA. APPROXIMATELY 12' APART.

REFER TO GENERAL STAPLE PATTERN GUIDE FOR CORRECT STAPLE PATTERN RECOMMENDATIONS FOR SLOPE INSTALLATIONS.

SLOPE APPLICATIONS for EROSION CONTROL BLANKET

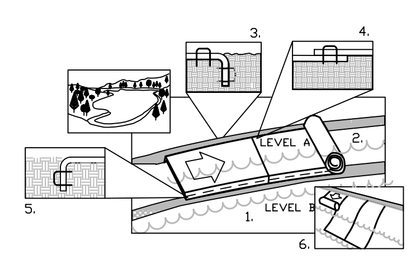

1. FOR OPTIMUM PERFORMANCE LOWER WATER FROM LEVEL A TO LEVEL B BEFORE INSTALLATION, IF POSSIBLE.
2. PREPARE SOIL BEFORE INSTALLING BLANKETS INCLUDING APPLICATION OF LIME, FERTILIZER AND SEED.
3. THE TOP EDGE OF THE BLANKET MUST BE ANCHORED IN A 6' DEEP X 6' WIDE TRENCH. BACKFILL AND COMPACT THE TRENCH AFTER STAPLING.
4. PLACE BLANKETS END OVER END WITH A 3' TO 4' OVERLAP. STAPLE THROUGH BOTH BLANKETS OF THE OVERLAPPED AREA. APPROXIMATELY 6' APART.
5. THE EDGE OF THE BLANKET THAT FALLS BELOW NORMAL WATER LEVEL MUST BE ANCHORED IN A 12' DEEP X 6' WIDE TRENCH. BACKFILL AND COMPACT THE TRENCH AFTER STAPLING. (STONE MAY BE SUBSTITUTED FOR SOIL BACKFILL).
6. IF BANK IS STEEP OR IF WATER LEVEL VARIES MORE THAN THE WIDTH OF THE BLANKET, USE VERTICAL INSTALLATION.

NOTE: IN LOOSE SOIL CONDITIONS, THE USE OF 18' OR LONGER METAL/WASHER PINS MAY BE NECESSARY TO PROPERLY ANCHOR THE BLANKETS.

REFER TO GENERAL STAPLE PATTERN GUIDE FOR CORRECT STAPLE PATTERN RECOMMENDATIONS FOR SLOPE INSTALLATIONS.

SHORELINE APPLICATIONS for EROSION CONTROL BLANKET

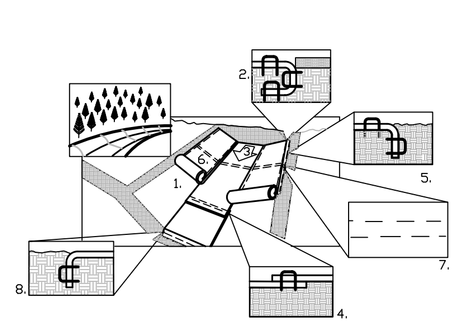

1. PREPARE SOIL BEFORE INSTALLING BLANKETS, INCLUDING APPLICATION OF LIME, FERTILIZER AND SEED.
2. BEGIN AT THE TOP OF THE CHANNEL BY ANCHORING THE BLANKET IN A 6' DEEP X 6' WIDE TRENCH. BACKFILL AND COMPACT THE TRENCH AFTER STAPLING.
3. ROLL CENTER BLANKET IN DIRECTION OF WATER FLOW ON BOTTOM OF CHANNEL.
4. PLACE BLANKETS END OVER END (SHINGLE STYLE) WITH A 6' OVERLAP. USE A DOUBLE ROW OF STAGGERED STAPLES 4' APART TO SECURE BLANKETS.
5. FULL LENGTH EDGE OF BLANKETS AT TOP OF SIDE SLOPES MUST BE ANCHORED IN6' DEEP X 6' WIDE TRENCH. BACKFILL AND COMPACT THE TRENCH AFTER STAPLING.
6. BLANKETS ON SIDE SLOPES MUST BE OVERLAPPED 4' OVER THE CENTER BLANKET AND STAPLED.
7. IN MEDIUM/HIGH FLOW CHANNEL APPLICATIONS, A STAPLE CHECK SLOT IS RECOM– MENDED AT 30 TO 40 FOOT INTERVALS. USE A ROW OF STAPLES 4' APART OVER THE ENTIRE WIDTH OF THE CHANNEL. PLACE A SECOND ROW 4' BELOW THE FIRST ROW IN A STAGGERED PATTERN.
8. THE TERMINAL END OF THE BLANKETS MUST BE ANCHORED IN A 6' DEEP X 6' WIDE TRENCH. BACKFILL AND COMPACT THE TRENCH AFTER STAPLING.

CHANNEL APPLICATIONS for EROSION CONTROL BLANKET

SILT FENCE FABRIC SPECIFICATIONS
POLYFELT TS600 OR EQUIVALENT

PROPERTY	TEST PROCEDURE	UNIT	VALUE
GRAB TENSILE	ASTM D4632	POUNDS	165
GRAB ELONGATION	ASTM D4632	PERCENT	>50
PUNCTURE	ASTM D4833	POUNDS	90
TRAPEZOIDAL TEAR	ASTM D4533	POUNDS	75
MULLEN BURST	ASTM D3786	PSI	255
WATER FLOW RATE	ASTM D4491	gpm/ft^2	170
PERMITIVITY	ASTM D4491	SEC^{-1}	2.0
PERMEABILITY, K	ASTM D4491	CM/SEC	0.4
A.O.S.	ASTM D4751	Sieve Size	100–60
	ASTM D4751	MM	0.15–0.25
FABRIC WEIGHT	ASTM D3776	oz/yd^2	6.0
THICKNESS	ASTM D1777	M	80
U.V. RESISTANCE (500 HOURS)	ASTM D4355	PERCENT STRENGTH RETAINED	>80

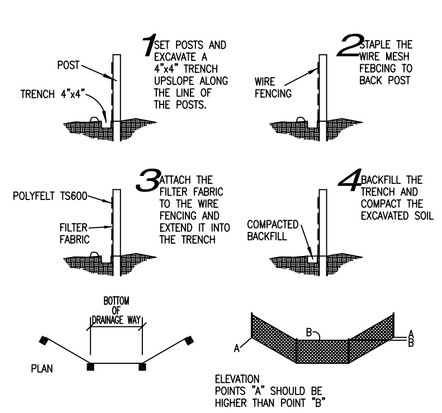

FILTER FENCE INSTALLATION DETAIL

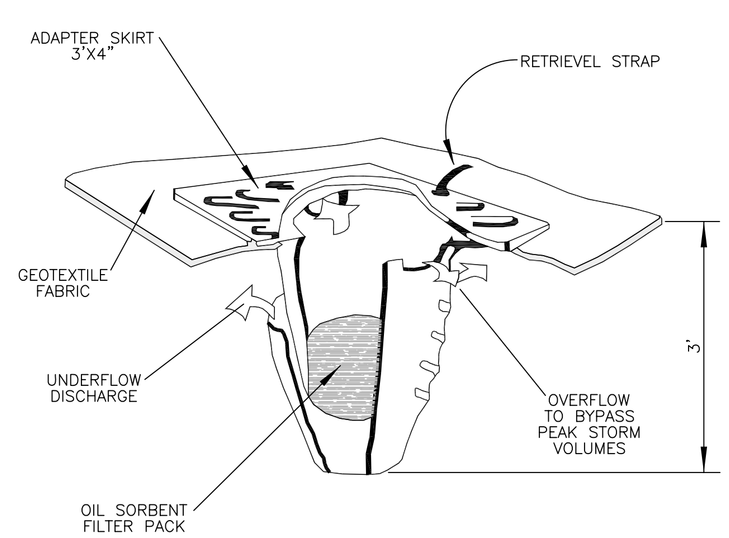

CATCH BASIN INSERT

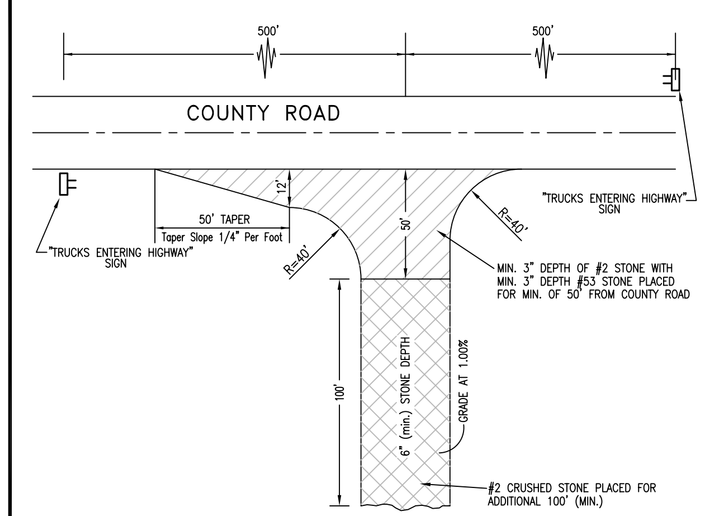

PLAN VIEW
NOT TO SCALE

TEMPORARY CONSTRUCTION ENTRANCE DETAIL

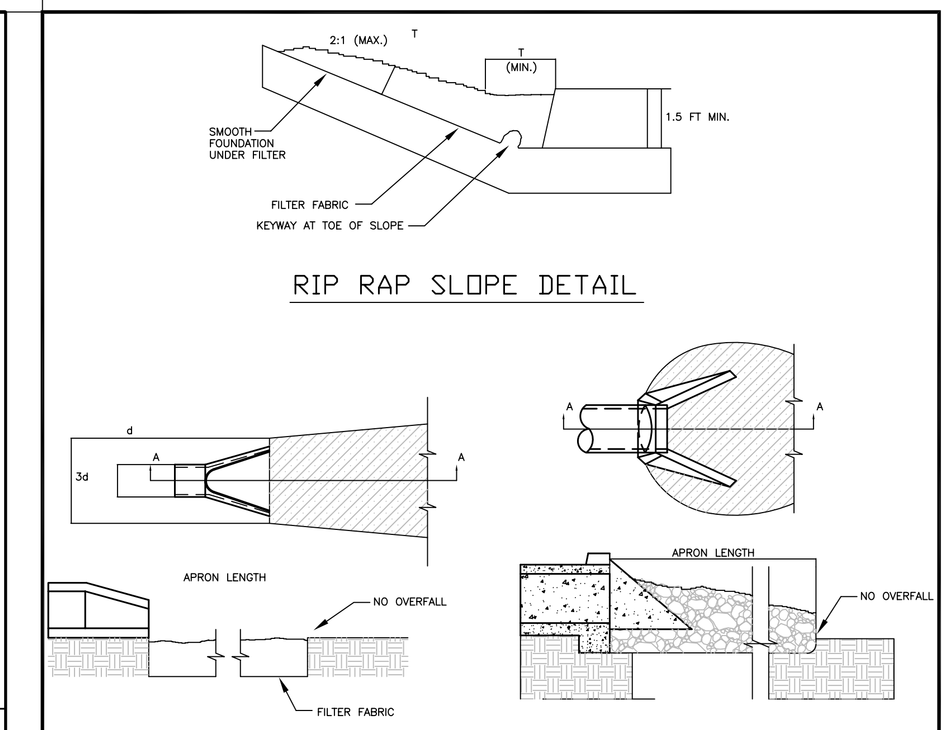

RIP RAP OUTLET DETAILS

EXHIBIT #3 SILT FENCE — EXHIBIT #5 TEMPORARY DOWNSPOUT EXTENDERS

DONNA JO SMITHERS REGISTERED No. 20100076 STATE OF INDIANA LAND SURVEYOR Seal 02-08-13

VENUS L.L. THORNE REGISTERED No. 11200278 STATE OF INDIANA PROFESSIONAL ENGINEER Seal 02-08-13

SCALE	N/A
DRAWN BY	
CHECKED BY	DJS, VT

PREPARED FOR
The Legends Indiana
2290 N. Hurricane Road
Franklin Indiana 46131

PROJECT NAME
The Legends of Indiana
Building Expansion
City of Franklin, Johnson County, Indiana

SHEET TITLE
DETAILS

Engineering, Land Surveying
Consulting & Inspection
Donna Jo Smithers
Professional Land Surveyor
President/ Owner
Venus L.L. Thorne
Professional Engineer
Dane Waltman
Project Manager / Field Operations
6125 South East Street, Suite "B"
Indianapolis, Indiana 46227-2147
Office - 317-884-3020
www.npcs.biz
NORTHPOINTE ENGINEERING & SURVEYING, Inc.

Date: 03-22-2013
Job # 13-0018

LATERAL NOTES:
- NORMAL LATERAL TO HAVE MAXIMUM DEPTH OF 6 FEET AT END, APPROX. 10 FEET FROM BUILDING SETBACK LINE.
- A MINIMUM OF 6 FEET OF COVER IS REQUIRED WITHIN ALL PUBLIC RIGHT-OF-WAY.

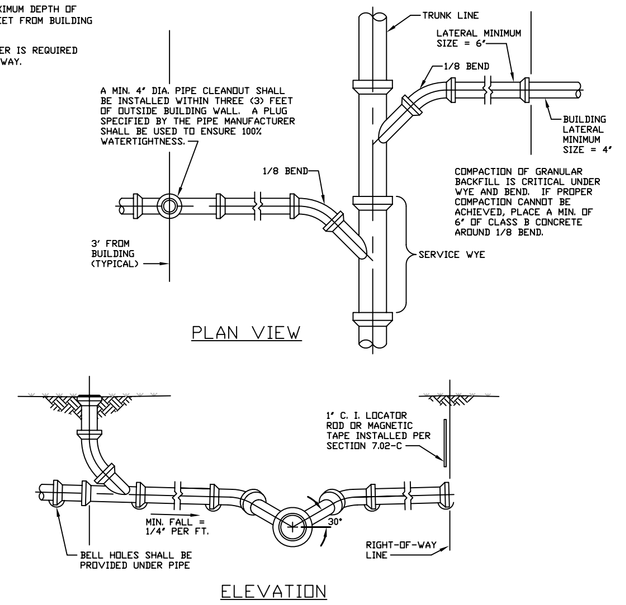

SERVICE CONNECTION FOR SHALLOW SEWERS (LESS THAN 15' DEEP)

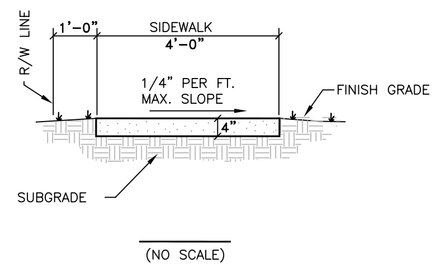

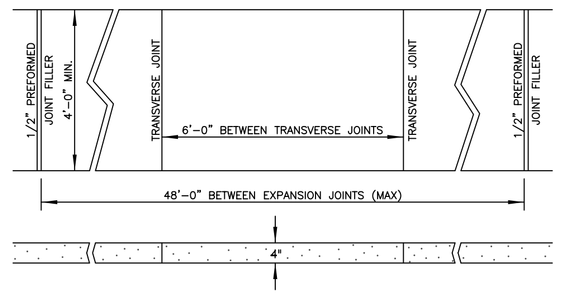

CONCRETE SIDEWALK DETAILS

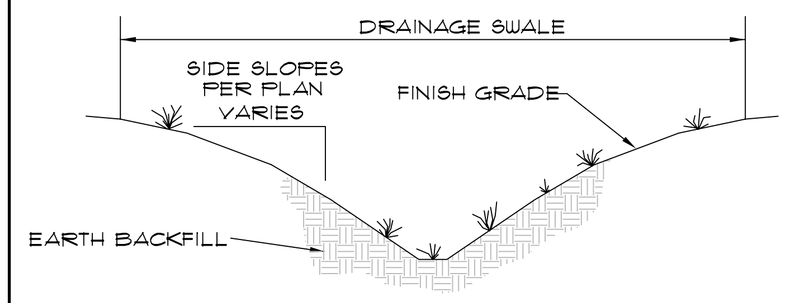

TYPICAL SWALE CROSS-SECTION

ONSITE TEMPORARY CONCRETE WASHOUT FACILITY, TRANSIT TRUCK WASHOUT PROCEDURES

TEMPORARY CONCRETE WASHOUT FACILITIES SHOULD BE LOCATED A MINIMUM OF 50 FT. FROM STORM DRAIN INLETS, OPEN DRAINAGE FACILITIES, AND WATERCOURSES. EACH FACILITY SHOULD BE LOCATED AWAY FROM CONSTRUCTION TRAFFIC OF ACCESS AREA TO PREVENT DISTURBANCE OF TRACKING.

A SIGN SHOULD BE INSTALLED ADJACENT TO EACH WASHOUT FACILITY TO INFORM CONCRETE EQUIPMENT OPERATORS TO UTILIZE THE PROPER FACILITIES.

TEMPORARY CONCRETE WASHOUT FACILITIES SHOULD BE CONSTRUCTED ABOVE GRADE OR BELOW GRADE AT THE OPTION OF THE CONTRACTOR. TEMPORARY CONCRETE WASHOUT FACILITIES SHOULD BE CONSTRUCTED AND MAINTAINED IN SUFFICIENT QUANTITY AND SIZE TO CONTAIN ALL LIQUID AND CONCRETE WASTE GENERATED BY WASHOUT OPERATIONS.

TEMPORARY WASHOUT FACILITIES SHOULD HAVE A TEMPORARY PIT OR BERMED AREAS OF SUFFICIENT VOLUME TO COMPLETELY CONTAIN ALL LIQUID AND WASTE CONCRETE MATERIALS GENERATED DURING WASHOUT PROCEDURES.

WASHOUT OF CONCRETE TRUCKS SHOULD BE PERFORMED IN DESIGNATED AREAS ONLY.

ONLY CONCRETE FROM MIXER TRUCK CHUTES SHOULD BE WASHED INTO CONCRETE WASH OUT.

CONCRETE WASHOUT FROM CONCRETE PUMPER BINS CAN BE WASHED INTO CONCRETE PUMPER TRUCKS AND DISCHARGED INTO DESIGNATED WASHOUT AREA OR PROPERLY DISPOSED OF OFFSITE.

ONCE CONCRETE WASTES ARE WASHED INTO THE DESIGNATED AREA AND ALLOWED TO HARDEN, THE CONCRETE SHOULD BE BROKEN UP, REMOVED, AND DISPOSED OF PER NW-5, SOLID WASTE MANAGEMENT. DISPOSE OF HARDENED CONCRETE ON A REGULAR BASIS.

TEMPORARY CONCRETE WASHOUT FACILITY (TYPE ABOVE GRADE)

- TEMPORARY CONCRETE WASHOUT FACILITY (TYPE ABOVE GRADE) SHOULD BE CONSTRUCTED AS SHOWN ON THE DETAILS AT THE END OF THE THIS BMP, WITH A RECOMMENDED MINIMUM LENGTH AND MINIMUM WIDTH OF 10 FT., BUT WITH SUFFICIENT QUANTITY AND VOLUME TO CONTAIN ALL LIQUID AND CONCRETE WASTE GENERATED BY WASHOUT OPERATIONS
- STRAW BALES, WOOD STAKES, AND SANDBAG MATERIALS SHOULD CONFORM TO THE PROVISIONS IN SE-8, STRAW BALE BARRIER.
- PLASTIC LINING MATERIAL SHOULD BE A MINIMUM OF 10 ML IN POLYETHYLENE SHEETING AND SHOULD BE FREE OF HOLES, TEARS, OR OTHER DEFECTS THAT COMPROMISE THE IMPERMEABILITY OF THE MATERIAL.

TEMPORARY CONCRETE WASHOUT FACILITY (TYPE BELOW GRADE)

- TEMPORARY CONCRETE WASHOUT FACILITIES (TYPE BELOW GRADE) SHOULD BE CONSTRUCTED AS SHOWN ON THE DETAILS AT THE END OF THIS BMP, WITH A RECOMMENDED MINIMUM LENGTH AND MINIMUM WIDTH OF 10 FT. THE QUANTITY AND VOLUME SHOULD BE SUFFICIENT TO CONTAIN ALL LIQUID AND CONCRETE WASTE GENERATED BY WASHOUT OPERATIONS.
- LATH AND FLAGGING SHOULD BE COMMERCIAL TYPE.
- PLASTIC LINING MATERIAL SHOULD BE A MINIMUM OF 10 ML POLYETHYLENE SHEETING AND SHOULD BE FREE OF HOLES, TEARS OR OTHER DEFECTS THAT COMPROMISE THE IMPERMEABILITY OF THE MATERIAL.

REMOVAL OF TEMPORARY CONCRETE WASHOUT FACILITIES

- WHEN TEMPORARY CONCRETE WASHOUT FACILITIES ARE NO LONGER REQUIRED FOR THE WORK, THE HARDENED CONCRETE SHOULD BE REMOVED AND DISPOSED OF. MATERIALS USED TO CONSTRUCT TEMPORARY CONCRETE WASHOUT FACILITIES SHOULD BE REMOVED FROM THE SITE OF WORK AND DISPOSED OF.
- HOLES, DEPRESSIONS OR OTHER GROUND DISTURBANCE CAUSED BY THE REMOVAL OF THE TEMPORARY CONCRETE WASHOUT FACILITIES SHOULD BE BACKFILLED AND REPAIRED.

INSPECTION AND MAINTENANCE

- INSPECT AND VERIFY THAT ACTIVITY-BASED BMPS ARE IN PLACE PRIOR TO THE COMMENCEMENT OF ASSOCIATED ACTIVITIES.L WHILE THE ACTIVITIES. WHILE ACTIVITIES ASSOCIATED WITH THE BMP ARE UNDER WAY, INSPECT WEEKLY DURING THE RAINY SEASON AND OF TOW -WEEK INTERVALS IN THE NON-RAINY SEASON TO VERIFY CONTINUED BMP IMPLEMENTATION.
- TEMPORARY CONCRETE WASHOUT FACILITIES SHOULD BE MAINTAINED TO PROVIDE ADEQUATE HOLDING CAPACITY WITH A MINIMUM FREEBOARD OF 4 IN. FOR ABOVE GRAD FACILITIES AND 12 IN. FOR BELOW GRADE FACILITIES. MAINTAINING TEMPORARY CONCRETE WASHOUT FACILITIES SHOULD INCLUDE REMOVING AND DISPOSING OF HARDENED CONCRETE AND RETURNING THE FACILITIES TO A FUNCTIONAL CONDITION. HARDENED CONCRETE MATERIALS SHOULD BE REMOVED AND DISPOSED OF.
- WASHOUT FACILITIES MUST BE CLEANED, OR NEW FACILITIES MUST BE CONSTRUCTED AND READY FOR USE ONCE THE WASHOUT IS 75% FULL.

CONCRETE WASTE MANAGEMENT

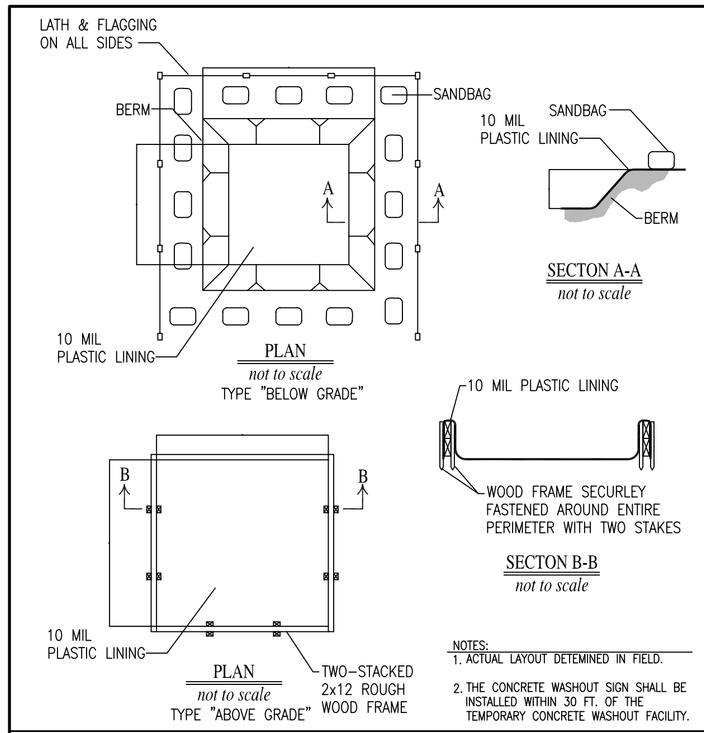

NOTES:
1. ACTUAL LAYOUT DETEMINED IN FIELD.
2. THE CONCRETE WASHOUT SIGN SHALL BE INSTALLED WITHIN 30 FT. OF THE TEMPORARY CONCRETE WASHOUT FACILITY.

CONCRETE WASTE MANAGEMENT

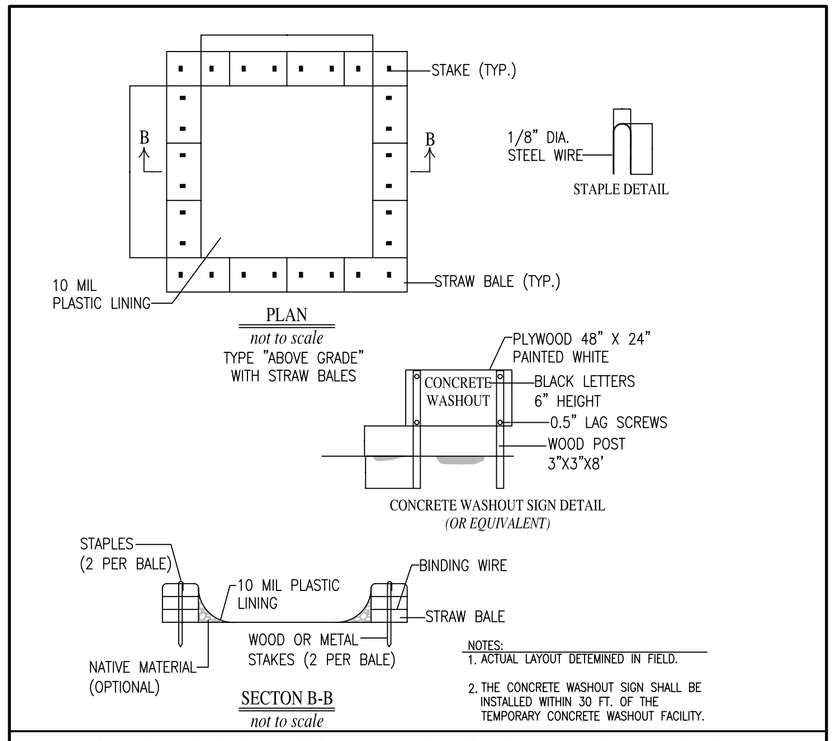

NOTES:
1. ACTUAL LAYOUT DETEMINED IN FIELD.
2. THE CONCRETE WASHOUT SIGN SHALL BE INSTALLED WITHIN 30 FT. OF THE TEMPORARY CONCRETE WASHOUT FACILITY.

CONCRETE WASTE MANAGEMENT

DONNA JO SMITHERS REGISTERED No. 20100076 STATE OF INDIANA LAND SURVEYOR — 02-08-13 — Seal

VENUS L.L. THORNE REGISTERED No. 11200278 STATE OF INDIANA PROFESSIONAL ENGINEER — 02-08-13 — Seal

SCALE	N/A
DRAWN BY	
CHECKED BY	DJS, VT

PREPARED FOR

The Legends Indiana
2290 N. Hurricane Road
Franklin Indiana 46131

PROJECT NAME

The Legends of Indiana Building Expansion

City of Franklin, Johnson County, Indiana

SHEET TITLE

DETAILS

Engineering, Land Surveying Consulting & Inspection

Donna Jo Smithers
Professional Land Surveyor
President / Owner

Venus L.L. Thorne
Professional Engineer

Dane Waltman
Project Manager / Field Operations

6125 South East Street, Suite "B"
Indianapolis, Indiana 46227-2147
Office - 317-884-3020
www.npesinc

NORTHPOINTE ENGINEERING & SURVEYING, Inc.

Sheet 7 of 7

Date: 03-22-2013

Job # 13-0018