IMPROVEMENT PLANS

TACO BELL

200 PARIS DRIVE
FRANKLIN, INDIANA 46131
JANUARY 9, 2019

VICINITY MAP N.T.S.

INDEX OF DRAWINGS

TITLE SHEET	T-001
ALTA/NSPS LAND TITLE SURVEY	1 OF 1
GENERAL NOTES	C-001
SITE PLAN	C-111
GRADING PLAN	C-121
SWPP NOTES	C-131
SWPP PLAN	C-132
SWPP PLAN NOTES AND DETAILS	C-133
SWPP PLAN DETAILS	C-134
UTILITY PLAN	C-141
STORM SEWER SIZING DRAINAGE MAP	C-142
DETAILS	C-501
DETAILS	C-502
DETAILS	C-503
LANDSCAPE NOTES	L-001
LANDSCAPE PLAN	L-101
LANDSCAPE DETAILS	L-501

"DON'T DIG BLIND"

"HOLEY MOLEY" SEZ:

Call Monday thru Friday – 7 am. to 6 pm.
1–800–382–5544
TOLL FREE
1–800–428–5200
OUTSIDE INDIANA

NOTICE TO CONTRACTOR

PER INDIANA STATE LAW 1S–69–1991, IT IS AGAINST THE LAW TO EXCAVATE WITHOUT NOTIFYING THE UNDERGROUND LOCATION SERVICE TWO (2) WORKING DAYS BEFORE COMMENCING WORK.

GPD GROUP, INC.
520 South Main Street, Suite 2531
Akron, OH 44311
330.572.2100 Fax: 330.572.2102

THIS SUBMITTAL IS FOR PERMITTING PURPOSES ONLY AND IS PRELIMINARY IN NATURE. AS SUCH, ANY OTHER USE OR RELIANCE IS STRICTLY PROHIBITED.

LEONARDO A. SIERRA
REGISTERED
No. 11600134
STATE OF INDIANA
PROFESSIONAL ENGINEER

02/07/19

CONTRACT DATE:	
BUILDING TYPE:	ME T40
PLAN VERSION:	
BRAND DESIGNER:	-
SITE NUMBER:	313327
STORE NUMBER:	2018088.55

TACO BELL

200 PARIS DRIVE
FRANKLIN, IN 44311

T40

TITLE SHEET

T-001

DEMOLITION NOTES

1. DEMOLITION INCLUDES THE FOLLOWING:
   - 1.A. TRANSFER BENCHMARK CONTROL TO NEW LOCATIONS OUTSIDE THE DISTURBED AREA PRIOR TO COMMENCING DEMOLITION OPERATIONS (WHEN APPLICABLE).
   - 1.B. DEMOLITION AND REMOVAL OF SITE IMPROVEMENTS.
   - 1.C. DISCONNECTING, CAPPING OR SEALING, AND ABANDONING/REMOVING SITE UTILITIES IN PLACE (WHICHEVER IS APPLICABLE).
2. REMOVE AND LEGALLY DISPOSE OF ITEMS EXCEPT THOSE INDICATED TO BE REINSTALLED, SALVAGED, OR TO REMAIN.
3. REMOVE, REINSTALL, AND RELOCATE: REMOVE ITEMS INDICATED; CLEAN, SERVICE, AND OTHERWISE PREPARE THEM FOR REUSE; STORE AND PROTECT AGAINST DAMAGE. REINSTALL ITEMS IN LOCATIONS INDICATED.
4. EXISTING TO REMAIN: PROTECT ITEMS INDICATED TO REMAIN AGAINST DAMAGE AND SOILING THROUGHOUT CONSTRUCTION. WHEN PERMITTED BY THE ENGINEER, ITEMS MAY BE REMOVED TO A SUITABLE, PROTECTED STORAGE LOCATION THROUGHOUT CONSTRUCTION AND THEN CLEANED AND REINSTALLED IN THEIR ORIGINAL LOCATIONS.
5. CONTRACTOR SHALL SCHEDULE DEMOLITION ACTIVITIES WITH THE CONSTRUCTION/PROJECT MANAGER INCLUDING THE FOLLOWING:
   - 5.A. DETAILED SEQUENCE OF DEMOLITION AND REMOVAL WORK, WITH STARTING AND ENDING DATES FOR EACH ACTIVITY.
   - 5.B. DATES FOR SHUTOFF, CAPPING, AND CONTINUATION OF UTILITY SERVICES.
   - 5.C. IDENTIFY AND ACCURATELY LOCATE UTILITIES AND OTHER SUBSURFACE STRUCTURAL, ELECTRICAL, OR MECHANICAL CONDITIONS.
6. REGULATORY REQUIREMENTS: COMPLY WITH GOVERNING EPA NOTIFICATION REGULATIONS BEFORE STARTING DEMOLITION. COMPLY WITH HAULING AND DISPOSAL REGULATIONS OF AUTHORITIES HAVING JURISDICTION.
7. STORAGE OR SALE OF REMOVED ITEMS OR MATERIALS ON-SITE WILL NOT BE PERMITTED.
8. OBTAIN APPROVED BORROW SOIL MATERIALS OFF-SITE WHEN SUFFICIENT SATISFACTORY SOIL MATERIALS ARE NOT AVAILABLE ON-SITE.
9. MAINTAIN EXISTING UTILITIES INDICATED TO REMAIN IN SERVICE AND PROTECT THEM AGAINST DAMAGE THROUGHOUT CONSTRUCTION OPERATIONS.
   - 9.A. DO NOT INTERRUPT EXISTING UTILITIES SERVING OCCUPIED OR OPERATING FACILITIES, EXCEPT WHEN AUTHORIZED IN WRITING BY ENGINEER AND AUTHORITIES HAVING JURISDICTION. PROVIDE TEMPORARY SERVICES DURING INTERRUPTIONS TO EXISTING UTILITIES, AS ACCEPTABLE TO OWNER AND TO GOVERNING AUTHORITIES.
10. DO NOT START DEMOLITION WORK UNTIL UTILITY DISCONNECTING AND SEALING HAVE BEEN COMPLETED AND VERIFIED IN WRITING.
11. UTILITY REQUIREMENTS: LOCATE, IDENTIFY, DISCONNECT, AND SEAL OR CAP OFF INDICATED UTILITY SERVICES SERVING THE SITE.
    - 11.A. ARRANGE TO SHUT OFF AND CAP UTILITIES WITH UTILITY COMPANIES AND FOLLOW THEIR RESPECTIVE UTILITY KILL AND CAP POLICIES.
12. CONDUCT DEMOLITION OPERATIONS TO PREVENT INJURY TO PEOPLE AND DAMAGE TO ADJACENT BUILDINGS AND FACILITIES TO REMAIN. ENSURE SAFE PASSAGE OF PEOPLE AROUND DEMOLITION AREA.
    - 12.A. ERECT TEMPORARY PROTECTION, BARRICADES AS PER LOCAL GOVERNING AUTHORITIES.
    - 12.B. PROTECT EXISTING SITE IMPROVEMENTS AND APPURTENANCES TO REMAIN.
13. EXPLOSIVES: USE OF EXPLOSIVES WILL NOT BE PERMITTED.
14. REMOVE AND TRANSPORT DEBRIS IN A MANNER THAT WILL PREVENT SPILLAGE ON ADJACENT SURFACES AND AREAS.
15. CLEAN ADJACENT BUILDINGS AND IMPROVEMENT OF DUST, DIRT, AND DEBRIS CAUSED BY DEMOLITION OPERATIONS. RETURN ADJACENT AREAS TO CONDITION EXISTING BEFORE START OF DEMOLITION.
16. DAMAGES: PROMPTLY REPAIR DAMAGES TO ADJACENT FACILITIES CAUSED BY DEMOLITION OPERATIONS AT THE CONTRACTORS COST.
17. GENERAL: PROMPTLY DISPOSE OF DEMOLISHED MATERIALS. DO NOT ALLOW DEMOLISHED MATERIALS TO ACCUMULATE ON-SITE.
18. BURNING: DO NOT BURN DEMOLISHED MATERIALS.
19. ASBESTOS: IT IS NOT EXPECTED THAT ASBESTOS WILL BE ENCOUNTERED IN THE COURSE OF THIS CONTRACT. IF ANY MATERIALS SUSPECTED OF CONTAINING ASBESTOS ARE ENCOUNTERED, DO NOT DISTURB THE MATERIALS. IMMEDIATELY NOTIFY THE ENGINEER AND THE OWNER.
20. BUILDING PAD DEMOLITION: DEMOLISH BUILDING PAD COMPLETELY AND REMOVE FROM THE SITE. USE METHODS REQUIRED TO COMPLETE WORK WITHIN LIMITATIONS OF GOVERNING REGULATIONS AND AS FOLLOWS:
    - 20.A. DISPOSE OF DEMOLISHED ITEMS AND MATERIALS PROMPTLY.
    - 20.B. DEMOLISH CONCRETE AND MASONRY IN SMALL SECTIONS.
    - 20.C. BREAK UP AND REMOVE CONCRETE SLABS ON GRADE.
21. BELOW-GRADE DEMOLITION: DEMOLISH FOUNDATION WALLS AND OTHER BELOW-GRADE DEMOLITION, AS FOLLOWS:
    - 21.A. COMPLETELY REMOVE BELOW-GRADE DEMOLITION, INCLUDING FOUNDATION WALLS FOOTINGS, AND BELOW GRADE CONCRETE SLABS.
22. FILLING BELOW-GRADE AREAS: COMPLETELY FILL BELOW-GRADE AREAS AND VOIDS RESULTING FROM DEMOLITION OF BUILDINGS AND PAVEMENTS WITH SOIL MATERIALS ACCORDING TO REQUIREMENTS PER SOILS REPORT. CONTRACTOR SHALL CONTACT ENGINEER PRIOR TO FILLING ANY AREAS. CONTRACTOR SHALL CONTACT ENGINEER TO OBSERVE FILL PROCEDURES.
23. CONDUCT DEMOLITION OPERATIONS AND REMOVE DEBRIS TO ENSURE MINIMUM INTERFERENCE WITH ROADS, STREETS, WALKS, AND OTHER ADJACENT OCCUPIED AND USED FACILITIES.
    - 23.A. DO NOT CLOSE OR OBSTRUCT STREETS, WALKS, OR OTHER ADJACENT OCCUPIED OR USED FACILITIES WITHOUT PERMISSION FROM OWNER AND AUTHORITIES HAVING JURISDICTION. PROVIDE ALTERNATE ROUTES AROUND CLOSED OR OBSTRUCTED TRAFFIC WAYS IF REQUIRED BY GOVERNING REGULATIONS.
24. CONTRACTOR TO SAWCUT EXISTING PAVEMENT TO REMAIN PRIOR TO CURB, GUTTER, PAVEMENT, ETC REMOVAL.

GENERAL PLAN NOTES

1. PRIOR TO STARTING CONSTRUCTION THE CONTRACTOR SHALL BE RESPONSIBLE TO MAKE SURE THAT ALL REQUIRED PERMITS AND APPROVALS HAVE BEEN OBTAINED. NO CONSTRUCTION OR FABRICATION SHALL BEGIN UNTIL THE CONTRACTOR HAS RECEIVED AND THOROUGHLY REVIEWED ALL PLANS AND OTHER DOCUMENTS APPROVED BY ALL OF THE PERMITTING AUTHORITIES.
2. ALL WORK SHALL BE PERFORMED IN ACCORDANCE WITH THESE PLANS, SPECIFICATIONS AND THE REQUIREMENTS AND STANDARDS OF THE LOCAL GOVERNING AUTHORITY. THE SOILS REPORT AND RECOMMENDATIONS SET FORTH THEREIN ARE A PART OF THE REQUIRED CONSTRUCTION DOCUMENTS AND TAKE PRECEDENCE UNLESS SPECIFICALLY NOTED OTHERWISE ON THE PLANS. THE CONTRACTOR SHALL NOTIFY THE CONSTRUCTION/PROJECT MANAGER OF ANY DISCREPANCY BETWEEN SOILS REPORT AND PLANS, ETC.
3. THE ALTA/NSPS SURVEY BY INDEPENDENT LAND SURVEYING, DATED 12/1/18 AND DEVELOPER PLANS, DATED XX/XX/XX SHALL BE CONSIDERED A PART OF THESE PLANS. THE G.C. IS RESPONSIBLE FOR LOCATING IMPROVEMENTS PER THESE PLANS.
4. THE LOCATIONS OF UNDERGROUND FACILITIES SHOWN ON THE PLAN ARE BASED ON FIELD SURVEYS, DEVELOPER PLANS, AND CITY RECORDS. IT SHALL BE THE CONTRACTOR'S FULL RESPONSIBILITY TO CONTACT THE VARIOUS UTILITY COMPANIES TO LOCATE THEIR FACILITIES PRIOR TO STARTING CONSTRUCTION. NO ADDITIONAL COMPENSATION SHALL BE PAID TO THE CONTRACTOR FOR DAMAGE AND REPAIR TO THESE FACILITIES CAUSED BY HIS WORK FORCE.
5. ALL DIMENSIONS, GRADES, AND UTILITY LOCATIONS SHOWN ON THESE PLANS WERE BASED ON TOPOGRAPHIC SURVEY. THE CONTRACTOR SHALL FIELD VERIFY ALL EXISTING CONDITIONS PRIOR TO CONSTRUCTION. CONTRACTOR SHALL NOTIFY CONSTRUCTION/PROJECT MANAGER IF ANY DISCREPANCIES EXIST PRIOR TO PROCEEDING WITH CONSTRUCTION FOR NECESSARY CHANGES. NO EXTRA COMPENSATION SHALL BE PAID TO THE CONTRACTOR FOR WORK HAVING TO BE REDONE DUE TO INFORMATION SHOWN INCORRECTLY ON THESE PLANS IF SUCH NOTIFICATION HAS NOT BEEN GIVEN.
6. ALL WORK WITHIN THE RIGHTS OF WAY SHALL BE IN ACCORDANCE WITH THE GOVERNING JURISDICTION AND SPECIFICATIONS.
7. CONTRACTOR SHALL COORDINATE ANY MAINTENANCE OF TRAFFIC WITH THE OWNER'S REPRESENTATIVE AND THE LOCAL JURISDICTION PRIOR TO CONSTRUCTION.
8. CONTRACTOR SHALL AT ALL TIMES ENSURE THAT SWPP MEASURES PROTECTING EXISTING DRAINAGE FACILITIES BE IN PLACE PRIOR TO THE COMMENCEMENT OF ANY PHASE OF THE SITE CONSTRUCTION OR LAND ALTERATION. (SEE SHEET C-131).
9. UPON COMPLETION OF PROJECT, CONTRACTOR SHALL CLEAN THE PAVED AREAS PRIOR TO REMOVAL OF TEMPORARY SEDIMENT CONTROLS, AS DIRECTED BY THE CITY AND/OR CONSTRUCTION/PROJECT MANAGER. IF POWER WASHING IS USED, NO SEDIMENT LADEN WATER SHALL BE WASHED INTO THE STORM SYSTEM. ALL SEDIMENT LADEN MATERIAL ON PAVEMENT OR WITHIN THE STORM SYSTEM SHALL BE COLLECTED AND REMOVED FROM THE SITE AT CONTRACTOR'S EXPENSE.
10. THE CONTRACTOR WILL, UPON BECOMING AWARE OF SUBSURFACE OR LATENT PHYSICAL CONDITIONS DIFFERING FROM THOSE DISCLOSED BY THE ORIGINAL SOIL EXPLORATION WORK, PROMPTLY NOTIFY THE OWNER VERBALLY TO PERMIT VERIFICATION OF THE CONDITIONS AND IN WRITING, AS TO THE NATURE OF THE DIFFERING CONDITIONS. NO CLAIM BY THE CONTRACTOR FOR ANY CONDITIONS DIFFERING FROM THOSE ANTICIPATED IN THE PLAN AND SPECIFICATIONS AND DISCLOSED BY THE SOIL STUDIES WILL BE ALLOWED UNLESS THE CONTRACTOR HAS SO NOTIFIED THE OWNER, VERBALLY AND IN WRITING AS REQUIRED ABOVE, OF SUCH DIFFERING CONDITIONS.
11. THESE PROJECT CONSTRUCTION DOCUMENTS SHALL NOT CONSTITUTE A CONTRACTUAL RELATIONSHIP BETWEEN THE ENGINEER AND THE CONTRACTOR OR THE ENGINEER AND THE SUBCONTRACTOR.
12. THE ENGINEER WILL NOT BE RESPONSIBLE FOR CONSTRUCTION OR SAFETY MEANS, METHODS, TECHNIQUES, SEQUENCES OR PROCEDURES UTILIZED IN CONSTRUCTION BY THE CONTRACTOR OR SUBCONTRACTORS.
13. THE CONTRACTOR SHALL RUN AN INDEPENDENT VERTICAL CONTROL TRAVERSE TO CHECK BENCHMARKS AND A HORIZONTAL CONTROL TRAVERSE THROUGH THE REFERENCED PROJECT CONTROL DATUM TO CONFIRM GEOMETRIC DATA. IT IS THE CONTRACTORS RESPONSIBILITY TO NOTIFY THE ENGINEER OF ANY DISCREPANCIES PRIOR TO THE START OF CONSTRUCTION.
14. IT SHALL BE CONTRACTORS RESPONSIBILITY TO COORDINATE WITH OWNER AND OBTAIN OVERALL DEVELOPMENT AND ADJACENT PROPERTIES PLANS COMPLETED BY INDEPENDENT LAND SURVEYING, DATED AUGUST 30, 2018 DURING BIDDING AND PRIOR TO CONSTRUCTION. THESE PLANS MAY PROVIDE ADDITIONAL CLARIFICATIONS TO CONTRACTORS SCOPE OF WORK.

SITE PLAN NOTES

1. ALL DIMENSIONS AND RADII ARE GIVEN TO FACE OF CURB UNLESS OTHERWISE NOTED.
2. ALL EXTERIOR SITE SPECIFIC PORTLAND CONCRETE CEMENT (I.E. SIDEWALK, PAVEMENT OR CURBING) SHALL MEET THE LATEST EDITION OF THE STATE DEPARTMENT OF TRANSPORTATION SPECIFICATIONS FOR MATERIALS USED, MIXING, TRANSPORTATION, PLACEMENT AND CURING. THE MINIMUM STRENGTH FOR PCC ALLOWED IS 4000 PSI AT 28 DAY STRENGTH. AIR ENTRAINMENT SHALL BE IN ACCORDANCE WITH DOT SPECIFICATIONS FOR EXTERIOR CONCRETE. (CONTRACTOR SHALL REFER TO DETAILS WITHIN THIS DRAWING SET FOR ANY VARIATIONS TO THIS SPECIFICATION)."
3. ALL EXTERIOR CURB SHALL HAVE EXPANSION JOINTS AT 100'-0" O.C, AND CONTROL JOINTS AT 10'-0" O.C. (UNLESS OTHERWISE SPECIFIED ON THE DETAIL SHEETS) ALL EXTERIOR WALK SHALL HAVE EXPANSION JOINTS AT 20'-0" O.C. AND CONTROL JOINTS @ 5'-0" MAX. O.C. (UNLESS OTHERWISE SPECIFIED ON THE DETAIL SHEETS).
4. ALL CONCRETE SHALL HAVE A MEDIUM TRANSVERSE FINISH.

GRADING PLAN NOTES

1. BEFORE STARTING GRADING OPERATIONS, SEE STORMWATER POLLUTION PREVENTION PLAN NOTES AND DETAILS (SWPP).
2. BEFORE STARTING GRADING OPERATIONS, SEE LANDSCAPE PLAN L-101 AND SOILS REPORT FOR TREATMENT OF EXISTING GRADE.
3. PRIOR TO SITE CONSTRUCTION ACTIVITY, THE CONTRACTOR SHALL INSTALL ALL SWPP MEASURES TO PROTECT EXISTING DRAINAGE FACILITIES. CONTRACTOR SHALL PREVENT SILTATION FROM LEAVING THE SITE AT ALL TIMES.
4. STRIP BUILDING AND PAVEMENT AREAS OF ALL ORGANIC TOPSOILS. STOCKPILE SUITABLE TOPSOILS FOR RESPREADING ONTO LANDSCAPE AREAS. ALL EXCESS EXCAVATED MATERIALS SHALL BE REMOVED FROM THE SITE AT THE CONTRACTOR'S EXPENSE. SEE GEOTECHNICAL REPORT FOR STRIPPING AND TOPSOIL REQUIREMENTS.
5. SITE GRADING SHALL BE PERFORMED IN ACCORDANCE WITH THESE PLANS AND SPECIFICATIONS AND THE RECOMMENDATIONS SET FORTH IN THE SOILS REPORT BY XXXXX, DATED XXXXX AND REFERENCED IN THIS PLAN SET. THE CONTRACTOR SHALL BE RESPONSIBLE FOR REMOVING ALL SOFT, YIELDING OR UNSUITABLE MATERIALS AND REPLACING WITH SUITABLE MATERIALS AS SPECIFIED IN THE SOILS REPORT. UNLESS OTHERWISE SPECIFIED IN THE PLANS, SPECIFICATIONS, OR SOILS REPORT THE SITE GRADING, EXCAVATION, AND EMBANKMENT SHALL BE IN ACCORDANCE WITH THE STATE DEPARTMENT OF TRANSPORTATION CONSTRUCTION AND MATERIAL SPECIFICATIONS.
6. AT A MINIMUM ALL EXCAVATED OR FILLED AREAS SHALL BE COMPACTED TO 96% OF STANDARD PROCTOR MAXIMUM DRY DENSITY PER A.S.T.M. TEST D-698. MOISTURE CONTENT AT TIME OF PLACEMENT SHALL NOT EXCEED 2% ABOVE NOR 2% BELOW OPTIMUM. THE CONTRACTOR SHALL FOLLOW THE RECOMMENDATIONS OF THE GEOTECHNICAL REPORT AND RETAIN A QUALIFIED SOILS ENGINEER REGISTERED WITHIN THE STATE TO ENSURE COMPLIANCE WITH THE GEOTECHNICAL REPORT, MAKE GEOTECHNICAL RECOMMENDATIONS BASED ON FIELD CONDITIONS, AND ENSURE THAT ALL SHORING AND DEWATERING MEANS AND METHODS WILL NOT COMPROMISE THE STABILITY OF EXISTING OR PROPOSED FOOTINGS/FOUNDATIONS. THE REQUIREMENT TO HIRE AN INDEPENDENT GEOTECHNICAL ENGINEER MAY BE WAIVED IF AN OWNER HIRED GEOTECHNICAL ENGINEER IS ONSITE. THE OWNER RESERVES THE RIGHT TO REQUEST COMPACTION REPORTS PREPARED BY THE CONTRACTOR'S GEOTECHNICAL ENGINEER, VERIFYING THAT ALL FILLED AREAS AND SUBGRADE AREAS WITHIN THE BUILDING PAD AREA AND AREAS TO BE PAVED HAVE BEEN COMPACTED IN ACCORDANCE WITH THESE PLANS AND SPECIFICATIONS AND THE RECOMMENDATIONS SET FORTH IN THE SOILS REPORT. NOTIFY PROJECT CONSTRUCTION MANAGER IF ANY UNSUITABLE SOILS ARE FOUND.
7. FOLLOWING GRADING OF SUBSOIL TO SUBGRADE ELEVATIONS THE CONTRACTOR SHALL PLACE TOPSOIL TO A 6" DEPTH IN ALL DISTURBED AREAS WHICH ARE NOT TO BE PAVED. SMOOTHLY FINISH GRADE TO MEET SURROUNDING LAWN AREAS AND ENSURE POSITIVE DRAINAGE. STOCKPILED TOPSOIL SHALL BE SCREENED PRIOR TO RESPREADING. TOPSOIL SHALL BE FREE OF SUBSOIL, DEBRIS, BRUSH AND STONES LARGER THAN 1" IN ANY DIMENSION. ROCK HOUNDING IN PLACE WILL NOT BE PERMITTED. ALL EXCESS TOPSOIL SHALL BE LEGALLY DISPOSED OF OFF SITE.
8. ELEVATIONS GIVEN ARE AT BOTTOM FACE OF CURB AND/OR FINISHED PAVEMENT GRADE UNLESS OTHERWISE SPECIFIED ON GRADING PLAN. ALL PAVEMENT SHALL BE LAID ON A STRAIGHT, EVEN, AND UNIFORM GRADE WITH A MINIMUM OF 1% SLOPE TOWARD THE COLLECTION POINTS UNLESS OTHERWISE SPECIFIED ON THE GRADING PLAN. DO NOT ALLOW NEGATIVE GRADES OR PONDING OF WATER.
9. SLOPE BUILDING SIDEWALK AWAY FROM THE BUILDING AT A MAXIMUM OF 1.5% (UNLESS OTHERWISE INDICATED ON SHEET C-121).
10. CONTRACTOR SHALL PROVIDE BUTT END JOINT TO MEET EXISTING PAVEMENT IN ELEVATION AT DRIVE RETURNS AND ENSURE POSITIVE DRAINAGE.

UTILITY NOTES

GENERAL UTILITY NOTES

1. CONTRACTOR SHALL CONTACT ALL UTILITY COMPANIES IMMEDIATELY AFTER BID IS AWARDED AND ENSURE THE UTILITY COMPANIES HAVE THE ESSENTIALS REQUIRED FOR COMPLETE SERVICE INSTALLATION. CONTRACTOR SHALL NOTIFY CONSTRUCTION MANAGER OF ANY TIME FRAMES ESTABLISHED BY UTILITY COMPANIES WHICH WILL NOT MEET OPENING DATE.
2. CONTRACTOR SHALL VERIFY THE SIZE, LOCATION, INVERT ELEVATION, AND CONDITION OF EXISTING UTILITIES WHICH ARE INTENDED TO BE UTILIZED AS A CONNECTION POINT FOR ALL PROPOSED UTILITIES (SEE SHEET C-141), PRIOR TO ANY CONSTRUCTION. CONTRACTOR TO ENSURE EXISTING UTILITIES ARE IN GOOD CONDITION AND FREE FLOWING (IF APPLICABLE). IF ELEVATIONS, SIZE, OR LOCATION DIFFER FROM WHAT IS SHOWN ON SHEET C-141, CONTRACTOR SHALL NOTIFY CONSTRUCTION MANAGER IMMEDIATELY.
3. WHERE PLANS PROVIDE FOR PROPOSED WORK TO BE CONNECTED TO, OR CROSS OVER AN EXISTING SEWER OR UNDERGROUND UTILITY, THE CONTRACTOR SHALL LOCATE THE EXISTING PIPES OR UTILITIES BOTH AS TO LINE AND GRADE BEFORE STARTING THE PROPOSED WORK. IF IT IS DETERMINED THAT THE ELEVATION OF THE EXISTING CONDUIT, OR EXISTING APPURTENANCE RESULTS IN A CHANGE IN THE PLAN, THE CONSTRUCTION MANAGER SHALL BE NOTIFIED BEFORE STARTING CONSTRUCTION OF ANY PORTION OF THE PROPOSED WORK WHICH WOULD BE AFFECTED BY THE INTERFERENCE WITH AN EXISTING FACILITY. PAYMENT FOR ALL THE OPERATIONS DESCRIBED ABOVE SHALL BE INCLUDED IN THE CONTRACT PRICE FOR THE PERTINENT ITEM.
4. UTILITY SERVICE PROVIDERS RULES AND REQUIREMENTS TAKE PRECEDENCE OVER INFORMATION HEREIN. IF DISCREPANCY ARISES, CONTRACTOR SHALL FULL COORDINATE WITH UTILITY SERVICE PROVIDER PRIOR TO START OF CONSTRUCTION.

STORM SEWER NOTES

14. ALL STORM SEWER PIPE 12" OR GREATER IN DIAMETER SHALL BE CORRUGATED HIGH DENSITY POLYETHYLENE (HDPE) SMOOTH INTERIOR PIPE (UNLESS OTHERWISE NOTED ON PLAN). HDPE PIPE SHALL CONFORM TO ASTM D 3350 AND JOINTS PER ASTM F477. STORM SEWER LESS THAN 12" IN DIAMETER SHALL BE PVC, SDR 35, PER ASTM D 3034 AND JOINTS PER ASTM D 3212 (OR APPROVED EQUAL).
15. THE CONTRACTOR SHALL BE RESPONSIBLE FOR ALL TRENCHING, BACKFILLING AND PIPE INSTALLATION, PIPE MATERIAL AND TAP CONNECTION. COORDINATE ALL WORK WITH MARK RICHARDS OF CITY OF FRANKLIN @ 877-736-3631.
16. ALL DRAINAGE STRUCTURES WITHIN PAVEMENT AREAS SHALL HAVE FINGER DRAINS PER DETAIL SHEET C-503.
17. ALL DRAINAGE STRUCTURES WITHIN PAVEMENT AREAS SHALL UTILIZE A 4" MINIMUM FRAME HEIGHT.

UTILITY NOTES (CONTINUED)

SANITARY SEWER NOTES

1. SANITARY SEWER LATERAL INVERT AT BUILDING SHALL BE A MINIMUM OF 6' BELOW FINISH FLOOR.
2. CLEAN-OUTS TO BE INSTALLED AT ALL PIPE BENDS AND ANGLES, UNLESS A MANHOLE IS INDICATED.
3. THE CONTRACTOR SHALL HIRE A LOCAL PLUMBER LICENSED WITH THE LOCAL SANITARY JURISDICTION TO MAKE ALL CONNECTIONS FROM THE BUILDING TO THE EXISTING 12" MAIN. CONTRACTOR SHALL SECURE A SANITARY SEWER CONNECTION PERMIT PRIOR TO ANY CONSTRUCTION. THE CONTRACTORS PRICE FOR SANITARY SEWER INSTALLATION SHALL INCLUDE ALL FEES AND APPURTENANCES REQUIRED BY THE LOCAL SANITARY JURISDICTION TO PROVIDE A COMPLETE WORKING SERVICE. COORDINATE ALL WORK WITH THE DEVELOPER AND RICK LITTLETON OF CITY OF FRANKLIN @ 888-736-3640 EXT. 1200.
4. ALL SANITARY PIPE MATERIAL SHALL BE 6" PVC, SDR 35 CONFORMING TO ASTM D 3034, WITH JOINTS PER ASTM 3212.

WATER NOTES

1. WATER SERVICE MATERIALS SHALL BE COPPER TYPE "K" UNLESS OTHERWISE NOTED ON PLANS. DIAMETER SHALL BE AS NOTED ON THESE PLANS (SHEET C-141) AND SHALL BE INSTALLED WITH A MINIMUM COVER OF 48" OR BELOW FROST LINE, WHICHEVER IS GREATER.
2. CONSTRUCTION AND MATERIALS PROVIDED BY THE UTILITY COMPANY / DEVELOPER:
   - TAP MAIN.
   - FURNISH AND INSTALL CURB STOP & BOX AND WATER METER.
   - FURNISH AND INSTALL COPPER SERVICE LINE FROM METER TO WITHIN 5' OF EXTERIOR OF BUILDING.
   - ALL TRENCHING AND BACKFILLING.
3. CONSTRUCTION AND MATERIALS PROVIDED BY THE CONTRACTOR:
   - FURNISH AND INSTALL COPPER SERVICE LINE FROM WITHIN 5' OF EXTERIOR OF BUILDING TO BUILDING, INCLUDING ALL TRENCHING AND BACKFILLING.
   - COORDINATE ALL WORK WITH THE DEVELOPER AND RONALD BALLARD OF INDIANA AMERICAN WATER @ 317-885-2432.

ELECTRICAL NOTES

1. SEE ELECTRICAL DRAWINGS FOR SITE LIGHTING AND LUMINAIRE DESCRIPTION.
2. SEE ELECTRICAL SHEETS FOR ALL DEDICATED EXTERIOR BUILDING AND SIGN LIGHTING SCHEDULES. ELECTRICAL CONTRACTOR SHALL BALANCE LOADS WHERE REQUIRED.
3. ALL PARKING LOT LIGHTING WIRING SHALL BE PER ELECTRICAL PLANS.
4. WHEN INSTALLING VERTICAL SWEEPS FOR UTILITY CONDUITS, CONTRACTOR SHALL USE 4" SCHD. 80 DUCTS.
5. DEVELOPER TO COORDINATE WITH UTILITY COMPANY FOR CONSTRUCTION AND MATERIALS PROVIDED BY THE ELECTRIC COMPANY:
   - FURNISH AND INSTALL PAD MOUNTED TRANSFORMER.
   - MAKE APPROPRIATE PRIMARY AND SECONDARY CONNECTIONS AT TRANSFORMER.
   - FURNISH AND INSTALL METER.
   - FURNISH AND INSTALL 1-4" PVC SCHEDULE 40 DUCTS, INCLUDING ALL TRENCHING AND BACKFILLING FROM TRANSFORMER TO WITHIN 5' OF EXTERIOR OF BUILDING.
6. CONSTRUCTION AND MATERIALS PROVIDED BY THE CONTRACTOR:
   - FURNISH AND INSTALL 1-4" PVC SCHEDULE 40 DUCTS, INCLUDING ALL TRENCHING AND BACKFILLING FROM WITHIN 5' OF EXTERIOR OF BUILDING TO BUILDING.
   - FURNISH AND INSTALL SECONDARY WIRE FROM THE BUILDING TO THE TRANSFORMER.
   - FURNISH AND INSTALL METER BASE AND CT CABINET.
   - INCLUDE ALL FEES REQUIRED BY ELECTRIC COMPANY TO PROVIDE A COMPLETE WORKING SERVICE.
   - COORDINATE ALL WORK WITH THE DEVELOPER AND TAYLOR AUSTIN OF DUKE ENERGY @ 800-774-0246.

TELEPHONE NOTES

1. DEVELOPER TO COORDINATE WITH UTILITY COMPANY FOR CONSTRUCTION AND MATERIALS PROVIDED BY THE TELEPHONE COMPANY:
   - COORDINATE ALL WORK WITH MACKENSON ELYSEE OF CENTURY LINK @ 317-736-6630.
   - PROVIDE AND INSTALL WIRING TO EXISTING SERVICE MANHOLE.
2. CONSTRUCTION AND MATERIALS PROVIDED BY THE CONTRACTOR:
   - FURNISH AND INSTALL ONE 4" PVC SCH. 40 CONDUIT WITH PULLWIRE FROM THE BUILDING TO EXISTING SERVICE.
   - ALL TRENCHING AND BACKFILLING.
   - INCLUDE ALL FEES REQUIRED BY TELEPHONE COMPANY TO PROVIDE A COMPLETE WORKING SERVICE.
3. CONTRACTOR SHALL COORDINATE THE NUMBER OF LINES REQUIRED WITH THE CONSTRUCTION/ PROJECT MANAGER.

NATURAL GAS NOTES

1. DEVELOPER TO COORDINATE WITH UTILITY COMPANY FOR CONSTRUCTION AND MATERIALS PROVIDED BY THE GAS COMPANY / DEVELOPER:
   - TAP MAIN.
   - FURNISH AND INSTALL SERVICE FROM TAP TO BUILDING.
   - ALL TRENCHING AND BACKFILLING.
   - FURNISH AND INSTALL METER.
   - COORDINATE ALL WORK WITH GERAMI PENNYMAN OF VECTREN @ 317-776-5585.
2. CONSTRUCTION AND MATERIALS PROVIDED BY THE CONTRACTOR:
   - FURNISH AND INSTALL SERVICE FROM METER TO BUILDING AND THROUGHOUT THE BUILDING.
   - CONTRACTOR SHALL INCLUDE ALL FEES REQUIRED BY THE GAS COMPANY TO PROVIDE A COMPLETE WORKING SERVICE.
3. CONTRACTOR SHALL COORDINATE WITH DEVELOPER AND GAS COMPANY FOR EXACT FINAL ROUTING OF SERVICE CONNECTION.

CABLE NOTES

1. INSTALL 4" CABLE TVSS CONDUIT PER CITY, STATE OR NEC CODE, WHICHEVER IS MORE STRINGENT (FOR FUTURE USE). SEE ELECTRICAL SHEETS FOR DETAILS. TERMINATE CABLE CONDUIT AT RIGHT-OF-WAY. PROVIDE END CAP AND NOTE LOCATION ON AS-BUILT DRAWINGS.
2. CONTRACTOR SHALL COORDINATE WITH DEVELOPER AND CABLE COMPANY FOR EXACT FINAL ROUTING OF SERVICE CONNECTION.

GENERAL LEGEND

EXISTING

- EXISTING TELEPHONE POLE
- EXISTING CURB INLET
- *EXISTING SANITARY MANHOLE*
- EXISTING FIRE HYDRANT
- EXISTING WATER METER
- EXISTING LIGHT POLE
- EXISTING POWER POLE
- EXISTING TELEPHONE MANHOLE
- EXISTING TELEPHONE PEDESTAL
- EXISTING CLEANOUT
- EXISTING FLAG POLE
- P/L — EXISTING PROPERTY LINE
- R/W — EXISTING RIGHT OF WAY LINE
- C/L — EXISTING CENTER LINE
- ST — EXISTING UNDERGROUND STORM LINES
- SAN — EXISTING UNDERGROUND SANITARY LINES
- T — EXISTING UNDERGROUND TELEPHONE LINES
- EXISTING BUILDING/STRUCTURE
- EXISTING CURB
- EXISTING DECIDUOUS TREE
- 000 — EXISTING CONTOUR
- BM # — BENCHMARK LOCATION

PROPOSED

- PROPOSED CURB INLET
- PROPOSED CATCH BASIN
- PROPOSED CLEAN OUT
- PROPOSED EXTERIOR GREASE INTERCEPTOR
- PROPOSED LIGHT POLE
- PROPOSED EDGE OF PAVEMENT
- PROPOSED CURB
- PROPOSED TRAFFIC SIGN

PLAN REPRODUCTION WARNING
THE PLANS HAVE BEEN CREATED ON ANSI D (22"x34") SHEETS, REFER TO GRAPHIC SCALE.

GPD GROUP, INC.
520 South Main Street, Suite 2531
Akron, OH 44311
330.572.2100 Fax: 330.572.2102

THIS SUBMITTAL IS FOR PERMITTING PURPOSES ONLY AND IS PRELIMINARY IN NATURE. AS SUCH, ANY OTHER USE OR RELIANCE IS STRICTLY PROHIBITED.

LEONARDO A. SFERRA REGISTERED No. 11600134 STATE OF INDIANA PROFESSIONAL ENGINEER

02/07/19

CONTRACT DATE:
BUILDING TYPE: ME T40
PLAN VERSION:
BRAND DESIGNER: -
SITE NUMBER: 313327
STORE NUMBER: 2018088.55

TACO BELL
200 PARIS DRIVE
FRANKLIN, IN 44311

TACO BELL
T40

GENERAL NOTES

C-001

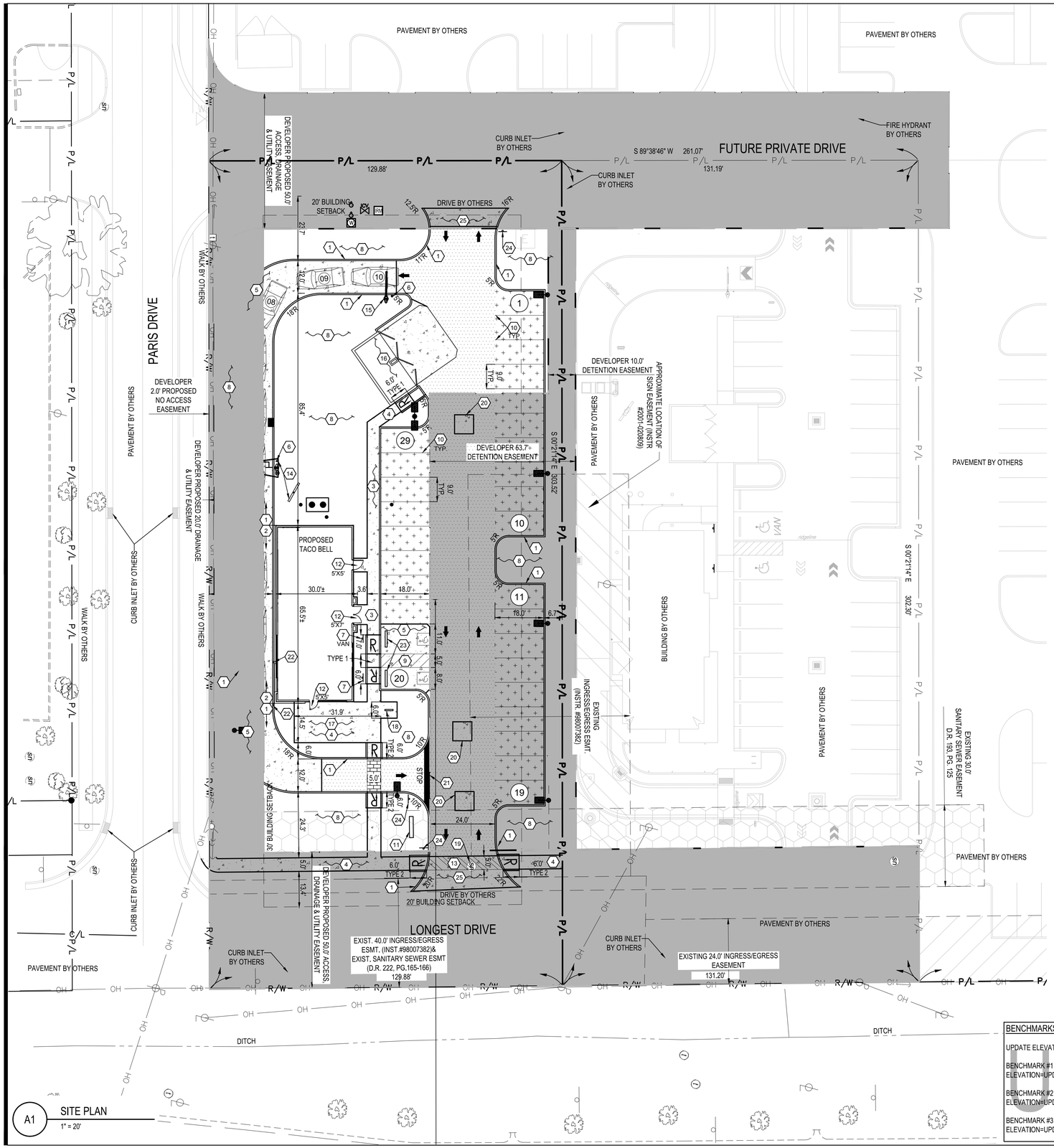

N

0 20 10 40

1"=20'
Horizontal Scale in Feet

PLAN KEYNOTES (#)

1. PROPOSED P.C.C. CURB, SEE SHEET C-501.
2. PROPOSED CURB AT DRIVE THRU, SEE SHEET C-501.
3. PROPOSED P.C.C. CURBED WALK, SEE SHEET C-501.
4. PROPOSED P.C.C. WALK, SEE SHEET C-501 AND CITY OF FRANKLIN, IN SPECIFICATIONS.
5. PROPOSED 8" P.C.C. PAVEMENT W/ W.W.F. 6" x 6"-W2.9 x W2.9 (CONTROL JTS. 12'-0" O.C.) OVER 6" CRUSHED AGGREGATE OR GRAVEL BASE. APPLY LIQUID ASPHALT AT ALL JOINTS BETWEEN CONCRETE AND ASPHALT.
6. PROPOSED BOLLARD, SEE SHEET C-501.
7. PROPOSED ADA PARKING SIGN, SEE SHEET C-501.
8. PROPOSED LANDSCAPING AREA. SOD ALL DISTURBED AREAS EXCEPT WHERE PLANTING BEDS ARE INDICATED. SEE SHEET L-101.
9. PROPOSED PAINTED TRANSVERSE STRIPING, SEE SHEET C-501.
10. PROPOSED PAINTED 4" WIDE SOLID STRIPE - WHITE ON ASPHALT, YELLOW ON CONCRETE.
11. PROPOSED 25' O.A.H., 49 S.F. POLE SIGN PER SIGN SUPPLIER SPECIFICATIONS.
12. PROPOSED FROST SLAB AT DOOR. SEE STRUCTURAL DRAWINGS.
13. PROPOSED CROSSWALK, SEE DETAIL SHEET C-501.
14. PROPOSED MENU BOARD AND ORDER CONFIRMATION BOARD PER SIGN SUPPLIER SPECIFICATIONS AND SHEET C-502. SIGN SUPPLIER TO PROVIDE A TEMPLATE FOR G.C. G.C. TO COORDINATE A MEETING WITH THE CONSTRUCTION/PROJECT MANAGER AND OPERATIONS TO VERIFY LOCATION AND PLACEMENT OF MENU BOARD AND ORDER CONFIRMATION BOARD PRIOR TO ANY CONSTRUCTION. SIGN SUPPLIER SHALL PROVIDE G.C. WITH FOUNDATION DETAILS. G.C. RESPONSIBLE FOR SIGN FOUNDATIONS/ELECTRICAL.
15. PROPOSED EVOLUTION PORTAL CLEARANCE BAR, SEE SHEET C-502.
16. PROPOSED MASONRY DUMPSTER ENCLOSURE ON P.C.C. PAD OVER CRUSHED AGGREGATE OR GRAVEL BASE, SEE ARCHITECTURAL PLANS. APPLY LIQUID ASPHALT AT ALL JOINTS BETWEEN CONCRETE AND ASPHALT.
17. PROPOSED PATIO REFER TO ARCHITECTURAL PLANS FOR ADDITIONAL INFORMATION INCLUDING FENCING.
18. PROPOSED BIKE RACK, SEE SHEET C-501.
19. EXISTING SANITARY MANHOLE TO BE ADJUSTED TO PROPOSED GRADES.
20. PROPOSED CONCRETE COLLAR, SEE DETAIL SHEET C-503.
21. PROPOSED 24" WIDE PAVEMENT STOP BAR.
22. PROPOSED BOLLARD IN CURB, SEE DETAIL SHEET C-501.
23. PROPOSED WHEELSTOP, SEE DETAIL SHEET C-502.
24. PROPOSED "STOP" SIGN, SEE DETAIL SHEET C-502.
25. PROPOSED 8" P.C.C. PAVEMENT W/ W.W.F. 6" x 6"-W2.9 x W2.9 (CONTROL JTS. 12'-0" O.C.) OVER 6" CRUSHED AGGREGATE OR GRAVEL BASE. APPLY LIQUID ASPHALT AT ALL JOINTS BETWEEN CONCRETE AND ASPHALT. FINAL PAVEMENT BUILD UP PER GEOTECHNICAL REPORT. CONTRACTOR SHALL COORDINATE WITH DEVELOPER TO ENSURE PROPOSED DRIVE APRON MATCHES HORIZONTAL AND VERTICAL LOCATIONS.

LEGEND

(SEE SHEET C-001 FOR GENERAL LEGEND)

- PROPOSED STANDARD DUTY ASPHALT PER ASPHALT PAVEMENT TABLE THIS SHEET AND SHEET C-501.
- PROPOSED STANDARD DUTY ASPHALT PER ASPHALT PAVEMENT TABLE THIS SHEET AND SHEET C-501.
- PROPOSED CONCRETE
- PROPOSED BRICK PAVERS, SEE SHEET C-502
- (#) CONSTRUCTION KEYNOTE
- (00) PROPOSED PARKING SPACE NUMBER
- PROPOSED DRIVE THRU STACK CAR AND NUMBER
- PROPOSED PAINTED INTERNATIONAL ADA SYMBOL PER ADA SPECIFICATIONS AND SHEET C-501.
- R PROPOSED ADA ACCESSIBLE RAMP PER ADA SPECIFICATIONS AND SHEET C-501. REFER TO PLAN VIEW FOR RAMP TYPE.
- PROPOSED UTILITIES REFER TO UTILITY PLAN FOR MORE INFORMATION.
- PROPOSED DIRECTIONAL PAVEMENT MARKINGS - WHITE ON ASPHALT, YELLOW ON CONCRETE - SEE SHEET C-501.
- PROPOSED EASEMENTS BY OTHERS (REFER TO DEVELOPER PLANS AND ALTA SURVEY)
- EXISTING 30' SANITARY SEWER EASEMENT
- EXISTING 24' INGRESS/EGRESS EASEMENT
- EXISTING 40' INGRESS/EGRESS EASEMENT

ASPHALT PAVEMENT

MATERIAL	DEPTH (HVY. DUTY)	DEPTH (STD. DUTY)	?DOT SPECIFICATIONS ITEM
A.C. SURFACE COURSE	XX"	XX"	XXXXXXXXXX
A.C. INTERMEDIATE COURSE	XX"	XX"	XXXXXXXXXX
AGG. BASE COURSE	XX"	XX"	XXXXXXXXXX
SUBGRADE COMPACTION	PER SOILS REPORT	PER SOILS REPORT	PER SOILS REPORT

SOILS REPORT GOVERNS IF ANY DISCREPANCIES OCCUR.
SEE TYPICAL SECTION SHEET ____.

"DON'T DIG BLIND" — "HOLEY MOLEY" SEZ:

Call Monday thru Friday – 7 am. to 6 pm.
1-800-382-5544 TOLL FREE
1-800-428-5200 OUTSIDE INDIANA

NOTICE TO CONTRACTOR

PER INDIANA STATE LAW 15-69-1991, IT IS AGAINST THE LAW TO EXCAVATE WITHOUT NOTIFYING THE UNDERGROUND LOCATION SERVICE TWO (2) WORKING DAYS BEFORE COMMENCING WORK.

BENCHMARKS:

UPDATE ELEVATION TIE-IN OR BASIS OF BEARING.

BENCHMARK #1 - UPDATE.
ELEVATION=UPDATE

BENCHMARK #2 - UPDATE.
ELEVATION=UPDATE

BENCHMARK #3 - UPDATE.
ELEVATION=UPDATE

UPDATE

BUILDING SETBACKS

	REQUIRED	PROVIDED
FRONT: LONGEST DR.	30'	104.9'
REAR: PRIVATE DR.	20'	134.1'
SIDE: EAST	15'	76.6'
SIDE: GATEWAY DR.	20'	24.5'

PARKING SETBACKS

	REQUIRED	PROVIDED
FRONT: LONGEST DR.	0'	66.1'
REAR: PRIVATE DR.	0'	36.2'
SIDE: EAST	0'	6.1'
SIDE: GATEWAY DR.	0'	11.0'

LANDSCAPE SETBACKS

	REQUIRED	PROVIDED
FRONT: LONGEST DR.	N/A	66.1'
REAR: PRIVATE DR.	N/A	36.2'
SIDE: EAST	N/A	6.1'
SIDE: GATEWAY DR.	N/A	11.0'

PARKING SPACES

	REQUIRED	PROVIDED
NUMBER OF SPACES	23	29

PARKING REQUIREMENTS
1 SPACE PER 300 SF OF GROSS FLOOR AREA PLUS 1 SPACE PER EMPLOYEE WORKING ON THE LARGEST SHIFT
THEREFORE: 1886 / 300 (+ 16) = 23 SPACES REQUIRED. PROVIDE 1 BICYCLE PARKING SPACE FOR EVERY 30 VEHICLE PARKING SPACES

LAND USE DATA

	% OF SITE AREA	AREA PROVIDED
BUILDING	4.4%	0.04 AC.
PAVEMENT/IMPERVIOUS	60.4%	0.55 AC.
LANDSCAPING	35.2%	0.32 AC.
TOTAL	100%	0.91 AC.

CURRENT ZONING: MXR : MIXED USE, REGIONAL CENTER
**WITH GW-OL:GATEWAY OVERLAY

GPD GROUP, INC.
520 South Main Street, Suite 2531
Akron, OH 44311
330.572.2100 Fax: 330.572.2102

THIS SUBMITTAL IS FOR PERMITTING PURPOSES ONLY AND IS PRELIMINARY IN NATURE. AS SUCH, ANY OTHER USE OR RELIANCE IS STRICTLY PROHIBITED.

LEONARDO A. SFERRA REGISTERED No. 11600134 STATE OF INDIANA PROFESSIONAL ENGINEER

02/07/19

CONTRACT DATE:
BUILDING TYPE: ME T40
PLAN VERSION:
BRAND DESIGNER: -
SITE NUMBER: 313327
STORE NUMBER: 2018088.55

TACO BELL
200 PARIS DRIVE
FRANKLIN, IN 44311

TACO BELL T40

SITE PLAN

C-111

BENCHMARKS:

UPDATE ELEVATION TIE-IN OR BASIS OF BEARING.

BENCHMARK #1 - UPDATE.
ELEVATION=UPDATE

BENCHMARK #2 - UPDATE.
ELEVATION=UPDATE

BENCHMARK #3 - UPDATE.
ELEVATION=UPDATE

UPDATE

"DON'T DIG BLIND"

"HOLEY MOLEY" SEZ:

Call Monday thru Friday – 7 am. to 6 pm.
1–800–382–5544
TOLL FREE
1–800–428–5200
OUTSIDE INDIANA

NOTICE TO CONTRACTOR

PER INDIANA STATE LAW 15–69–1991, IT IS AGAINST THE LAW TO EXCAVATE WITHOUT NOTIFYING THE UNDERGROUND LOCATION SERVICE TWO (2) WORKING DAYS BEFORE COMMENCING WORK.

N

0 10
5 1"=10' 20
Horizontal Scale in Feet

GENERAL SHEET NOTES

1. OFF-SITE GRADING PER DEVELOPER. CONTRACTOR SHALL COORDINATE ALL GRADING WITH DEVELOPERS PLANS PRIOR TO START OF CONSTRUCTION.

LEGEND

(SEE SHEET C-001 FOR GENERAL LEGEND)

000	PROPOSED CONTOUR
000.00	PROPOSED ELEVATION @ FINISHED GROUND ELEVATION
T=000.00 / B=000.00	TOP OF CURB ELEVATION / BOTTOM OF CURB/FINISHED PAVEMENT ELEVATION
000.00*	MATCH EXISTING ELEVATION BY OTHERS
HP=745.50	PROPOSED HIGH POINT
0.0%	PROPOSED DRAINAGE SLOPE & DIRECTION

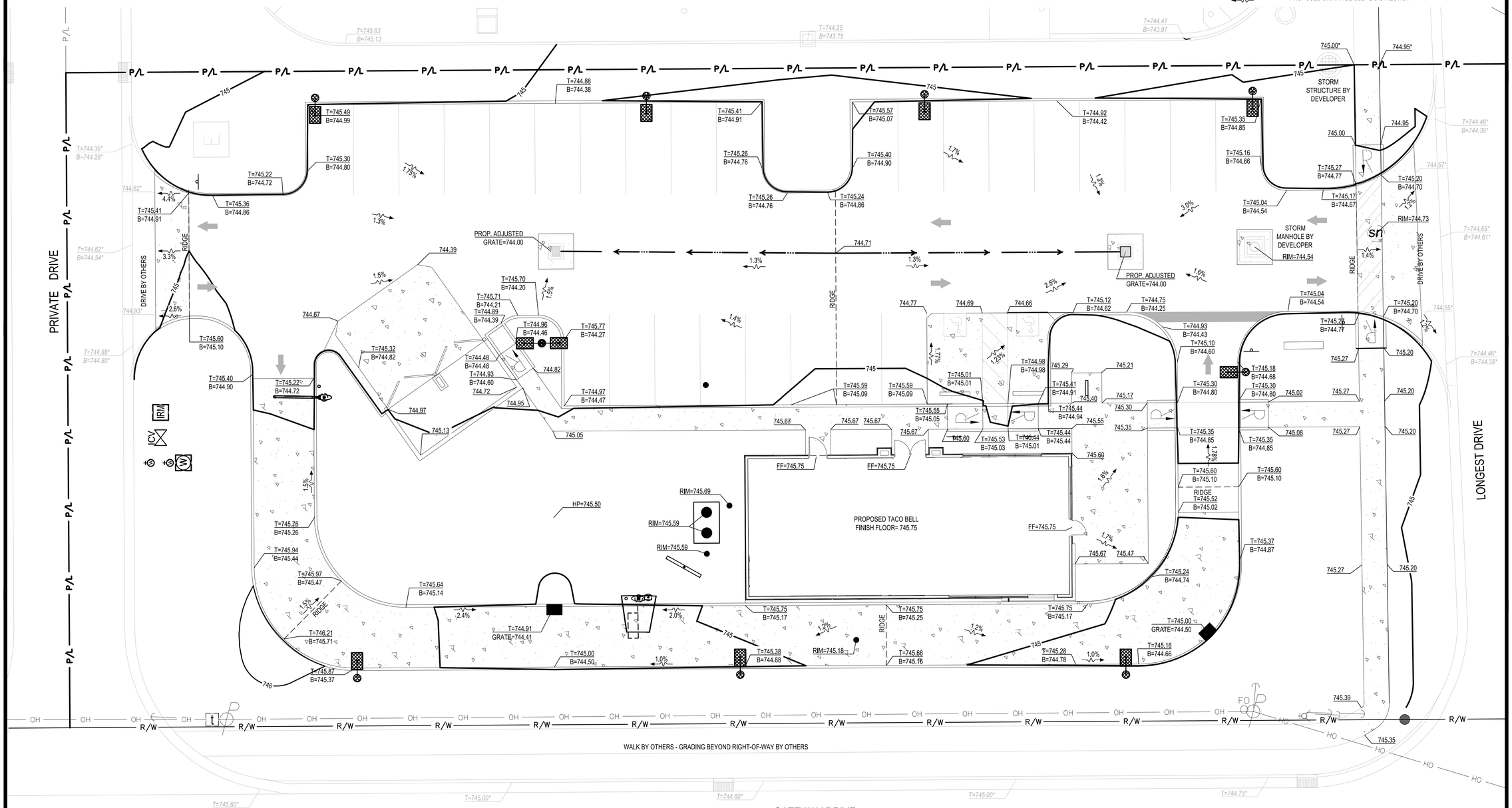

A1 GRADING PLAN
1" = 20'

GPD GROUP, INC.
520 South Main Street, Suite 2531
Akron, OH 44311
330.572.2100 Fax: 330.572.2102

THIS SUBMITTAL IS FOR PERMITTING PURPOSES ONLY AND IS PRELIMINARY IN NATURE. AS SUCH, ANY OTHER USE OR RELIANCE IS STRICTLY PROHIBITED.

LEONARDO A. SIERRA
REGISTERED
No. 11600134
STATE OF INDIANA
PROFESSIONAL ENGINEER

02/07/19

CONTRACT DATE:	
BUILDING TYPE:	ME T40
PLAN VERSION:	
BRAND DESIGNER:	-
SITE NUMBER:	313327
STORE NUMBER:	2018088.55

TACO BELL

200 PARIS DRIVE
FRANKLIN, IN 44311

TACO BELL
T40

GRADING PLAN

C-121

STORM WATER POLLUTION PREVENTION NOTES

1. ALL WORK SPECIFIED AS AN DEPARTMENT OF TRANSPORTATION ITEM SHALL BE GOVERNED BY THE CURRENT STATE OF DEPARTMENT OF TRANSPORTATION CONSTRUCTION AND MATERIAL SPECIFICATIONS AS WELL AS THE CURRENT EDITION OF THE LOCAL JURISDICTION STORM WATER MANAGEMENT MANUAL. IT IS THE CONTRACTOR'S RESPONSIBILITY TO POSSESS AND TO BE FAMILIAR WITH APPLICABLE SECTIONS.

2. THESE CONTRACT DRAWING SHALL BE MADE AVAILABLE ON SITE AT ALL TIMES AND PRESENTED UPON REQUEST. IF UNFORESEEN STORM WATER POLLUTION IS ENCOUNTERED, ADDITIONAL STORM WATER POLLUTION PREVENTION (SWPP) MEASURES SHALL BE IMPLEMENTED TO MANAGE THE CURRENT SITE CONDITIONS WHICH MAY BE REQUESTED BY THE OWNER, COUNTY ENGINEER, PROJECT ENGINEER OR SOIL AND WATER CONSERVATION SERVICE REPRESENTATIVE AT ANYTIME. SUCH REQUESTS AND CHANGE IN SITE CONDITIONS SHALL BE IMPLEMENTED IMMEDIATELY AT CONTRACTOR'S EXPENSE.

3. ALL STORM WATER POLLUTION PREVENTION PRACTICES WILL BE INSTALLED BEFORE ANY OTHER EARTH MOVING OCCURS.

4. ALL STORM WATER POLLUTION PREVENTION ITEMS SHALL BE INSTALLED AS SHOWN OR NOTED IN THESE PLANS.

5. PLANT TEMPORARY SEEDING AND MULCHING IN ALL AREAS THAT SHALL BE INACTIVE FOR 14 DAYS OR MORE. ALL DISTURBED AND ERODED EARTH SHALL BE REGRADED AND SEEDED WITHIN 7 DAYS WITH SEEDING, AS DEFINED ON THE TEMPORARY SEEDING TABLE WITHIN THESE PLANS, TO ESTABLISH STABILITY AND PROVIDE SEDIMENT CONTROL. WHERE POSSIBLE, TEMPORARY SEEDING GROWTH SHALL NOT BE MOWED UNTIL IT HAS GONE TO SEED FOR 1 YEAR.

6. PERMANENT VEGETATION SHALL BE INSTALLED WITHIN 7 DAYS AT THE COMPLETION OF ANY GRADED AREAS, WEATHER PERMITTING.

7. PRIOR TO THE TIME THAT DRAINAGE DIVERTS TO INLETS, INLET SEDIMENT FILTERS SHALL BE INSTALLED AT ALL INLET STRUCTURES TO KEEP PIPING SYSTEMS FREE OF SILTATION.

8. SILT BARRIERS SHALL BE INSTALLED AROUND ALL EXISTING AND NEW STORM INLETS, CATCH BASINS, YARD DRAINS. INSTALL ROCK CHECK DAMS FOR HEADWALL INLETS FOR STORM WATER POLLUTION PREVENTION.

9. STORM WATER POLLUTION PREVENTION MEASURES SHALL BE INSTALLED AROUND ALL DIRT OR TOPSOIL STOCKPILES AND OTHER TEMPORARILY DISTURBED AREAS AS SHOWN ON THESE PLANS AND AS DIRECTED BY THE ENGINEER.

10. CONTRACTOR SHALL INSPECT ALL SWPP MEASURES DAILY AND LOGGED BY THE CONTRACTOR FOR INSPECTION, LOGGING SHALL BE WEEKLY AND AFTER EVERY ½" RAINFALL EVENT. REPAIR AS NECESSARY TO PREVENT EROSION. SILTATION SHALL BE REMOVED FROM AREAS WHERE FAILURES HAVE OCCURRED AND CORRECTIVE ACTION TAKEN WITHIN 24 HOURS TO MAINTAIN ALL SWPP.

11. SILT BARRIERS, CONSTRUCTION ENTRANCES, AND SILT PERIMETER CONTROLS SHALL REMAIN IN PLACE UNTIL A GOOD STAND OF GRASS HAS BEEN OBTAINED AND/OR PAVING OPERATIONS ARE COMPLETE. CONTRACTOR SHALL KEEP SILT FROM ENTERING ANY STORM DRAINAGE SYSTEM. ONCE SITE HAS BEEN COMPLETELY STABILIZED, ANY SILT IN PIPES AND DRAINAGE SWALES SHALL BE REMOVED WITHIN 10 DAYS.

12. TEMPORARY SEDIMENTATION AND STORM WATER POLLUTION PREVENTION MEASURES MUST BE INSPECTED AND AFTER ½" RAIN EVENTS.

13. UTILITY COMPANIES MUST COMPLY WITH ALL STORM WATER POLLUTION PREVENTION MEASURES AS DEFINED ON THE STORM WATER POLLUTION PREVENTION PLANS, DETAILS AND NOTES.

14. ALL EXISTING WATER COURSES WITHIN THE PROJECT LIMITS SHALL BE TEMPORARILY PROTECTED DURING LAND CLEARING AND GRADING OPERATIONS. SOILS WITHIN 50 FEET OF SAID WATER COURSES SHALL BE STABILIZED WITHIN 2 DAYS OF THE INITIAL CLEARING / GRADING OPERATION AS SHOWN ON PLANS.

15. IT IS THE CONTRACTOR'S RESPONSIBILITY TO MAINTAIN ALL SEDIMENTATION AND STORM WATER POLLUTION PREVENTION ITEMS AT ALL TIMES.

16. DUST CONTROL SHALL BE MAINTAINED THROUGHOUT CONSTRUCTION. IF POSSIBLE GRADING SHALL BE DONE BY PHASING. IF PHASING IS NOT AN OPTION, DUST SHALL BE CONTROLLED WITH WATER DURING EARTHWORK. AFTER EARTHWORK OPERATIONS, THE EXPOSED SOILS SHALL BE COVERED WITH STRAW OR MULCH UNTIL SEEDED. SEE DETAIL WITHIN THESE PLANS. OIL IS NOT TO BE USED AS A DUST SUPPRESSANT.

17. ANY DISCHARGE OF PETROLEUM OR PETROLEUM PRODUCTS OF LESS THAN 25 GALLONS ONTO A PERVIOUS SURFACE SHALL BE LEGALLY REMOVED AND PROPERLY TREATED OR PROPERLY DISPOSED OF. OR OTHERWISE REMEDIATED, SO THAT NO CONTAMINATION FROM THE DISCHARGE REMAINS ON-SITE.

18. IN THE EVENT OF A LARGE PETROLEUM SPILL (25 OR MORE GALLONS) CONTRACTOR MUST CONTACT THE CURRENT STATE'S EPA. THE LOCAL FIRE DEPARTMENT, AND THE LOCAL EMERGENCY PLANNING COMMITTEE (LEPC) WITHIN 30 MINUTES OF A SPILL OF 25 OR MORE GALLONS.

19. CONSTRUCTION ENTRANCE AND CONCRETE WASHOUT FACILITY SHALL BE UTILIZED, IF CONDITIONS ARE SUCH THAT MUD IS COLLECTING ON VEHICLE TIRES, THE TIRES MUST BE CLEANED BEFORE THE VEHICLES ENTER THE PUBLIC ROADWAY. THE SITE ENTRANCE SHALL BE MAINTAINED IN A CONDITION THAT WILL PREVENT THE TRACKING OR FLOW OF MUD ONTO THE PUBLIC RIGHT-OF-WAY. ALL MATERIALS SPILLED, DROPPED, WASHED OR TRACKED FROM VEHICLES ONTO THE ROADWAY MUST BE REMOVED PROMPTLY.

20. IF NECESSARY, THE CONTRACTOR SHALL COORDINATE WITH RESPECTIVE UTILITY COMPANIES PRIOR TO THE REMOVAL AND/OR RELOCATION OF UTILITIES. THE CONTRACTOR SHALL COORDINATE WITH THE UTILITY COMPANY CONCERNING PORTIONS OF WORK WHICH MAY BE PERFORMED BY THE UTILITY COMPANY'S FORCES AND ANY FEES WHICH ARE TO BE PAID TO THE UTILITY COMPANY FOR THEIR SERVICES. THE CONTRACTOR IS RESPONSIBLE FOR PAYING ALL FEES AND CHARGES.

21. IF NECESSARY, ELECTRICAL, TELEPHONE, CABLE, WATER, FIBER OPTIC CABLE AND/OR GAS LINES NEEDING TO BE REMOVED OR RELOCATED SHALL BE COORDINATED WITH THE AFFECTED UTILITY COMPANY. ADEQUATE TIME SHALL BE PROVIDED FOR RELOCATION AND CLOSE COORDINATION WITH THE UTILITY COMPANY IS NECESSARY TO PROVIDE A SMOOTH TRANSITION IN UTILITY SERVICE. CONTRACTOR SHALL PAY CLOSE ATTENTION TO EXISTING UTILITIES WITHIN ANY ROAD RIGHT OF WAY DURING CONSTRUCTION.

22. CONTRACTOR IS RESPONSIBLE FOR PLACING AND MAINTAINING CONSTRUCTION FENCE, SIGNS, ETC. TO WARN AND KEEP PEOPLE OFF SITE FOR THE DURATION OF THE PROJECT. IF AN EXISTING FENCE IS PARTIALLY AROUND THE PERIMETER OF THE SITE IT COULD BE UTILIZED AS A CONSTRUCTION FENCE DURING INFRASTRUCTURE WORK.

23. IF ENCOUNTERED DURING SITE REDEVELOPMENT, ANY OIL/GAS WELLS OR MINE SHAFTS MUST BE PROPERLY ABANDONED, VAULTED AND VENTED IN ACCORDANCE WITH CURRENT REGULATIONS AND SPECIFICATIONS OF ALL GOVERNING AUTHORITIES

24. IF, FOR ANY REASON, THE PROJECT IS SUSPENDED, THE CONTRACTOR SHALL INSURE THAT ALL INSTALLED EROSION MEASURES ARE FUNCTIONING AND PROPERLY MAINTAINED DURING THIS PERIOD, AND THAT ALL BARE SOILS ARE SEEDED AND MULCHED WITH TEMPORARY SEED MIXTURE.

25. THE FOLLOWING STORM WATER POLLUTION PREVENTION AND SEDIMENT CONTROL MEASURES WHICH WILL BE USED ON THIS SITE INCLUDE, BUT ARE NOT LIMITED TO THE FOLLOWING :
    a. SILT FENCE
    b. SILT BARRIERS
    c. CONSTRUCTION ENTRANCE
    d. CONCRETE WASHOUT FACILITY

ADDITIONAL CONSTRUCTION SITE POLLUTION CONTROLS

1. CONSTRUCTION PERSONNEL, INCLUDING SUBCONTRACTORS WHO MAY USE OR HANDLE HAZARDOUS OR TOXIC MATERIALS, SHALL BE MADE AWARE OF THE FOLLOWING GENERAL GUIDELINES REGARDING DISPOSAL AND HANDLING OF HAZARDOUS AND CONSTRUCTION WASTES:
    a) PREVENT SPILLS
    b) USE PRODUCTS UP
    c) FOLLOW LABEL DIRECTIONS FOR DISPOSAL
    d) REMOVE LIDS FROM EMPTY BOTTLES AND CANS WHEN DISPOSING IN TRASH
    e) RECYCLE WASTES WHENEVER POSSIBLE
    f) DON'T POUR INTO WATERWAYS, STORM DRAINS OR ONTO THE GROUND
    g) DON'T POUR DOWN THE SINK, DOOR DRAIN OR SEPTIC TANKS
    h) DON'T BURY CHEMICALS OR CONTAINERS
    i) DON'T BURN CHEMICALS OR CONTAINERS
    j) DON'T MIX CHEMICALS TOGETHER

2. CONTAINERS SHALL BE PROVIDED FOR THE PROPER COLLECTION OF ALL WASTE MATERIAL INCLUDING CONSTRUCTION DEBRIS, TRASH, PETROLEUM PRODUCTS AND ANY HAZARDOUS MATERIALS USED ON-SITE. CONTAINERS SHALL BE COVERED AND NOT LEAKING. ALL WASTE MATERIAL SHALL BE DISPOSED OF AT FACILITIES APPROVED FOR THAT MATERIAL. CONSTRUCTION DEMOLITION AND DEBRIS (CD&D) WASTE MUST BE DISPOSED OF AT THE CURRENT STATE'S EPA APPROVED CD&D LAND FILL.

3. NO CONSTRUCTION RELATED WASTE MATERIALS ARE TO BE BURIED ON-SITE. BY EXCEPTION, CLEAN FILL (BRICKS, HARDENED CONCRETE, SOIL) MAY BE UTILIZED IN A WAY WHICH DOES NOT ENCROACH UPON NATURAL WETLANDS, STREAMS OR PLAINS OR RESULT IN THE CONTAMINATION OF WATERS OF THE STATE.

4. HANDLING CONSTRUCTION CHEMICALS : MIXING, PUMPING, TRANSFERRING OR OTHER HANDLING OF CONSTRUCTION CHEMICALS SUCH AS FERTILIZER, LIME, ASPHALT, CONCRETE DRYING COMPOUNDS, AND ALL OTHER POTENTIALLY HAZARDOUS MATERIALS SHALL BE PERFORMED IN AN AREA AWAY FROM ANY WATERCOURSE, DITCH OR STORM DRAIN.

5. EQUIPMENT FUELING AND MAINTENANCE, OIL CHANGING, ETC., SHALL BE PERFORMED AWAY FROM WATERCOURSES, DITCHES OR STORM DRAINS, IN AN AREA DESIGNATED FOR THAT PURPOSE. THE DESIGNATED AREA SHALL BE EQUIPPED FOR RECYCLING OIL AND CATCHING SPILLS. SECONDARY CONTAINMENT SHALL BE PROVIDED FOR ALL FUEL OIL STORAGE TANKS. THESE AREAS MUST BE INSPECTED EVERY SEVEN DAYS AND WITHIN 24 HRS. OF A 0.5 INCH OR GREATER RAIN EVENT TO ENSURE THERE ARE NO EXPOSED MATERIALS WHICH WOULD CONTAMINATE STORM WATER. SITE OPERATORS MUST BE AWARE THAT SPILL PREVENTION CONTROL AND COUNTERMEASURES (SPCC) REQUIREMENTS MAY APPLY. AN SPCC PLAN IS REQUIRED FOR SITES WITH ONE SINGLE ABOVE GROUND TANK OF 660 GALLONS OR MORE, ACCUMULATIVE ABOVE GROUND STORAGE OF 1330 GALLONS OR MORE, OR 42,000 GALLONS OF UNDERGROUND STORAGE. CONTAMINATED SOILS MUST BE DISPOSED OF IN ACCORDANCE WITH ITEM 8.

6. CONCRETE WASH WATER SHALL NOT BE ALLOWED TO FLOW TO STREAMS, DITCHES, STORM DRAINS, OR ANY OTHER WATER CONVEYANCE. A SUMP OR PIT WITH NO POTENTIAL FOR DISCHARGE SHALL BE CONSTRUCTED IF NEEDED TO CONTAIN CONCRETE WASH WATER. FIELD TILE OR OTHER SUBSURFACE DRAINAGE STRUCTURES WITHIN 10 FT. OF THE SUMP SHALL BE CUT AND PLUGGED. FOR SMALL PROJECTS, TRUCK CHUTES MAY BE RINSED AWAY FROM ANY WATER CONVEYANCES.

7. SPILL REPORTING REQUIREMENTS : SPILLS ON PAVEMENT SHALL BE ABSORBED WITH SAWDUST OR KITTY LITTER AND DISPOSED OF WITH THE TRASH AT A LICENSED SANITARY LAND FILL. HAZARDOUS OR INDUSTRIAL WASTES SUCH AS MOST SOLVENTS, GASOLINE, OIL-BASED PAINTS, AND CEMENT CURING COMPOUNDS REQUIRE SPECIAL HANDLING. SPILLS SHALL BE REPORTED TO THE CURRENT STATE'S EPA. SPILLS OF 25 GALLONS OR MORE OF PETROLEUM PRODUCTS SHALL BE REPORTED TO THE CURRENT STATE'S EPA, THE LOCAL FIRE DEPARTMENT, AND THE LOCAL EMERGENCY PLANNING COMMITTEE WITHIN 30 MINUTES OF THE DISCOVERY OF THE RELEASE. ALL SPILLS WHICH CONTACT WATERS OF THE STATE MUST BE REPORTED TO THE CURRENT STATE'S EPA.

8. CONTAMINATED SOILS : IF SUBSTANCES SUCH AS OIL, DIESEL FUEL, HYDRAULIC FLUID, ANTIFREEZE, ETC. ARE SPILLED, LEAKED, OR RELEASED ONTO THE SOIL, THE SOIL SHOULD BE DUG UP AND DISPOSED OF AT LICENSED SANITARY LAND FILL OR OTHER APPROVED PETROLEUM CONTAMINATED SOIL REMEDIATION FACILITY (NOT A CONSTRUCTION/DEMOLITION DEBRIS LAND FILL). NOTE THOSE STORM WATER RUNOFFS ASSOCIATED WITH CONTAMINATED SOILS ARE NOT BE AUTHORIZED UNDER THE CURRENT STATE'S EPA GENERAL STORM WATER PERMIT ASSOCIATED WITH CONSTRUCTION ACTIVITIES.

9. OPEN BURNING : NO OPEN BURNING.

10. DUST CONTROL OR DUST SUPPRESSANTS SHALL BE USED TO PREVENT NUISANCE CONDITIONS, IN ACCORDANCE WITH THE MANUFACTURER'S SPECIFICATIONS AND IN A MANNER, WHICH PREVENT A DISCHARGE TO WATERS OF THE STATE. SUFFICIENT DISTANCE MUST BE PROVIDED BETWEEN APPLICATIONS AND NEARBY BRIDGES, CATCH BASINS, AND OTHER WATERWAYS. APPLICATION (EXCLUDING WATER) MAY NOT OCCUR WHEN RAIN IS IMMINENT AS NOTED IN THE SHORT TERM FORECAST. USED OIL MAY NOT BE APPLIED FOR DUST CONTROL.

11. OTHER AIR PERMITTING REQUIREMENTS : CERTAIN ACTIVITIES ASSOCIATED WITH CONSTRUCTION WILL REQUIRE AIR PERMITS INCLUDING BUT NOT LIMITED TO: MOBILE CONCRETE BATCH PLANTS, MOBILE ASPHALT PLANTS, CONCRETE CRUSHERS, LARGE GENERATORS, ETC. THESE ACTIVITIES WILL REQUIRE SPECIFIC THE CURRENT STATE'S EPA AIR PERMITS FOR INSTALLATION AND OPERATION. OPERATORS MUST SEEK AUTHORIZATION FROM THE CORRESPONDING DISTRICT OF THE EPA. FOR DEMOLITION OF ALL COMMERCIAL SITES, A NOTIFICATION FOR RESTORATION AND DEMOLITION MUST BE SUBMITTED TO THE CURRENT STATE'S EPA TO DETERMINE IF ASBESTOS CORRECTIVE ACTIONS ARE REQUIRED.

12. PROCESS WASTE WATER/LEACHATE MANAGEMENT : EPA'S CONSTRUCTION GENERAL PERMIT ONLY ALLOWS THE DISCHARGE OF STORM WATER AND DOES NOT INCLUDE OTHER WASTE STREAMS/DISCHARGES SUCH AS VEHICLE AND/OR EQUIPMENT WASHING, ON-SITE SEPTIC LEACHATE CONCRETE WASH OUTS, WHICH ARE CONSIDERED PROCESS WASTEWATERS. ALL PROCESS WASTEWATERS MUST BE COLLECTED AND PROPERLY DISPOSED AT AN APPROVED DISPOSAL FACILITY. IN THE EVENT, LEACHATE OR SEPTAGE IS DISCHARGED; IT MUST BE ISOLATED FOR COLLECTION AND PROPER DISPOSAL AND CORRECTIVE ACTIONS TAKEN TO ELIMINATE THE SOURCE OF WASTE WATER.

13. PLEASE REFER TO THE LOCAL JURISDICTION STORM WATER MANAGEMENT MANUAL, CURRENT EDITION, FOR ADDITIONAL INFORMATION.

14. WASTES GENERATED BY CONSTRUCTION ACTIVITIES (I.E. CONSTRUCTION MATERIALS SUCH AS PAINTS, SOLVENTS, FUELS, CONCRETE, WOOD, ETC) MUST BE DISPOSED OF IN ACCORDANCE WITH LOCAL REGULATIONS. HAZARDOUS AND TOXIC SUBSTANCES ARE USED ON VIRTUALLY ALL CONSTRUCTION SITES. GOOD MANAGEMENT OF THESE SUBSTANCES IS ALWAYS NEEDED.

CONSTRUCTION SEQUENCE

DURING PRECONSTRUCTION MEETING ALL EROSION & SEDIMENT CONTROL FACILITIES & PROCEDURES SHALL BE DISCUSSED.

1. INSTALL CONSTRUCTION ENTRANCE AS DETAILED ON PLANS. TEMPORARY CONSTRUCTION FENCING SHALL BE INSTALLED AROUND PERIMETER OF CONSTRUCTION SITE. WHERE THERE IS EXISTING FENCE ALONG THE PERIMETER OF THE SITE, IT CAN BE UTILIZED. FENCING SHALL BE USED TO RESTRICT OUTSIDE TRAFFIC TO SITE.

2. DELIVER CONSTRUCTION TRAILER TO SITE AND INSTALL TEMPORARY POWER AND TELEPHONE, IF REQUIRED. TEMPORARY UTILITY SERVICES ARE THE SOLE RESPONSIBILITY OF THE CONTRACTOR.

3. STAKE AND/OR FLAG LIMITS OF CLEARING.

4. CLEARING & GRUBBING, AS NECESSARY, FOR INSTALLATION OF PERIMETER CONTROLS. INSTALL SILT PERIMETER CONTROLS AS SHOWN ON PLANS. SILT PERIMETER CONTROLS SHALL BE INSTALLED LEVEL, ALONG THE CONTOURS, WITH ENDS TURNED UPSLOPE TO PREVENT CONCENTRATED FLOW AT THE SILT PERIMETER CONTROLS.

5. INSTALL TEMPORARY SILT INLET PROTECTION ON ALL EXISTING CATCH BASINS AND INLETS, AS DESIGNATED IN THE PLANS. REMOVAL OF SILT INLET PROTECTION FROM DESIGNATED INLETS CAN ONLY OCCUR WHEN A STRUCTURE IS REMOVED, AND AS REQUIRED BY THE PROGRESSION OF THE DEMOLITION AND CONSTRUCTION.

6. CLEARING & GRUBBING, AS NECESSARY, TO CONSTRUCT AND MAINTAIN TEMPORARY DIVERSION SWALE AND / OR DIVERSION BERM DURING FILLING & GRADING ACTIVITIES, AS MAY BE NECESSARY.

7. CLEARING & GRUBBING THE REMAINING SITE AS NECESSARY. TOPSOIL SHALL BE STRIPPED AND STOCKPILED ON SITE FOR REUSE, OR REMOVED TO AN APPROVED OFFSITE SPOIL AREA.

8. BEGIN FILLING & GRADING AS REQUIRED TO REACH SUBGRADE.

9. UTILIZE DUST CONTROL MEASURES AS REQUIRED TO MINIMIZE AIR-BORNE POLLUTION BY METHODS APPROVED BY THE AUTHORIZING EPA OFFICE.

10. ONCE PAVEMENT GRADES HAVE BEEN ESTABLISHED, AS DESIGNATED ON THE PLANS, THE CONTRACTOR SHALL UTILIZE THESE AREAS FOR STRUCTURE CONSTRUCTION.

11. IN PROPOSED GRASS AREAS, REPLACE TOPSOIL, FINE GRADE AND SEED, AS REQUIRED. STABILIZE ALL DISTURBED AREAS WITH PERMANENT SEED AND MULCHING OR TEMPORARY SEEDING IMMEDIATELY UPON REACHING FINAL GRADE.

12. CONSTRUCT UNDERGROUND UTILITY WORK INCLUDING STORM DRAINAGE FACILITIES. UPON INSTALLATION OF STORM DRAINAGE CATCH BASINS, YARD DRAINS AND INLETS, INSTALL REQUIRED INLET PROTECTION.

13. DO NOT REPLACE ANY TOPSOIL, SEED OR INSTALL FINAL PAVEMENT PRIOR TO COMPLETION OF BUILDING SHELL. SHOULD SITEWORK BE COMPLETED PRIOR TO THIS DATE, MULCH DISTURBED AREAS TO BE PLANTED AND INSTALL STONE SUBBASE IN DISTURBED AREAS TO BE PAVED.

14. FOLLOWING COMPLETION OF BUILDING SHELL AND PAVEMENT INSTALLATION. BEGIN LANDSCAPE INSTALLATION.

15. COMPLETE SITEWORK, PAVEMENT MARKINGS AND FINAL CLEAN-UP. RESEED ANY AREAS THAT MAY REQUIRE ATTENTION IMMEDIATELY. NOTE THAT LAWN AREAS WILL NOT BE DEEMED STABLE UNTIL A MINIMUM 80% VEGETATIVE DENSITY HAS BEEN ACHIEVED.

16. MAINTAIN EROSION & SEDIMENTATION CONTROL MEASURES UNTIL THE SITE HAS BEEN COMPLETELY STABILIZED. ALL AREAS OF VEGETATIVE SURFACE, WHETHER PERMANENT OR TEMPORARY, SHALL BE CONSIDERED TO BE IN PLACE AND FUNCTIONAL WHEN THE REQUIRED UNIFORM RATE OF COVERAGE (80%) IS OBTAINED.

17. REMOVE SEDIMENT CONTROLS.

18. THE FOLLOWING ITEMS MUST BE COMPLETED IN ORDER BY THE CONTRACTOR, ONCE THE SITE HAS BEEN DEEMED STABLE:
    a) REMOVE CONSTRUCTION ENTRANCE PRIOR TO COMPLETION OF PAVING
    b) SITE CLEAN UP
    c) RESEED ANY AREAS THAT REQUIRE ADDITIONAL SEED
    d) SILT FENCE SHOULD BE CLEANED, REMOVED, BACKFILLED AND SEEDED WITH PERMANENT SEEDING.
    e) VERIFY POSITIVE DRAINAGE FLOW IN ALL DRAINAGE STRUCTURES, REPAIR AS NECESSARY.

CONTRACTORS INSPECTOR SHALL BE A QUALIFIED INDIVIDUAL. SITE INSPECTIONS SHALL BE DONE WEEKLY AND WITHIN 24 HRS AFTER EVERY RAINFALL EVENT EXCEEDING 1/2" OF RAINFALL. ALL NECESSARY REPAIRS SHOULD BE IMPLEMENTED IMMEDIATELY AFTER SUCH INSPECTIONS.

CONTRACTOR'S INSPECTOR SHALL BE RESPONSIBLE FOR PREPARING AND SIGNING WEEKLY AND ALL INTERMEDIATE EROSION CONTROL INSPECTION REPORTS AFTER EVERY INSPECTION. SUCH REPORTS SHALL BE MADE AVAILABLE TO OWNER, ENGINEER AND CITY / STATE OFFICIALS UPON THEIR REQUEST.

REPORTS SHALL BE KEPT FOR 3 YEARS AFTER TERMINATION OF THE CONSTRUCTION ACTIVITIES.

CONTRACTOR MAY SUBMIT A WAIVER REQUEST TO THE STATE EPA FOR A REDUCTION TO MONTHLY INSPECTIONS IF THE SITE WILL BE STABILIZED DORMANT SITE FOR A LONG PERIOD.

ONLY A QUALIFIED INSPECTION PERSONNEL IS TO PERFORM THE INSPECTIONS.

FOR BMPS THAT REQUIRE REPAIR OR MAINTENANCE - NON SEDIMENT POND BMPS ARE TO BE REPAIRED WITHIN 3 DAYS OF INSPECTION AND SEDIMENT PONDS ARE TO BE REPAIRED OR CLEANED OUT WITHIN 10 DAYS OF INSPECTION.

FOR BMPS THAT DO NOT MEET THE INTENDED FUNCTION, A NEW BMP SHALL BE INSTALLED WITHIN 10 DAYS OF THE INSPECTION.

FOR MISSING BMPS REQUIRED, THE MISSING BMPS SHALL BE INSTALLED WITHIN 10 DAYS OF THE INSPECTION.

STORM WATER POLLUTION PREVENTION PLAN NARRATIVE

PROJECT DESCRIPTION

THIS SITE WAS HOME TO A EMPTY FIELD AND PART OF AN EXISTING PARKING LOT WHICH WILL BE DEMOLISHED BY THE DEVELOPER PLANS AND WILL BE REPLACED BY A NEW TACO BELL SITE AS SHOWN IN THESE PLANS. WATER QUALITY AND DETENTION WILL BE DONE BY THE DEVELOPER.

PROJECT COMPLETION STATISTICS

PARCEL SIZE (AFTER LOT SPLIT):	0.91 ACRES
TOTAL DISTURBED AREA:	APPROX. 0.91 ACRES

EXISTING LAND USE FOR THE SITE IS DRIVEWAY, PARKING AND GRASSED AREAS.

ESTIMATED PRE-CONSTRUCTION IMPERVIOUS AREA:	0.24 ACRES
ESTIMATED PRE-CONSTRUCTION IMPERVIOUS PERCENT:	26.4%
ESTIMATED PRE-CONSTRUCTION RUN-OFF CURVE NUMBER:	85

PROPOSED LAND USE WILL BE TACO BELL BUILDING WITH PARKING LOT AND AMENITY IMPROVEMENTS

ESTIMATED POST-CONSTRUCTION IMPERVIOUS AREA:	0.59 ACRES
ESTIMATED POST-CONSTRUCTION IMPERVIOUS PERCENT:	64.8%
ESTIMATED POST-CONSTRUCTION RUN-OFF CURVE NUMBER:	92

PROJECT LOCATION:

LATITUDE	LONGITUDE
39.483629°	-86.017103°

EXISTING SITE SOIL TYPES:

Br: BROOKSTON SILTY CLAY LOAM, 0 TO 2 PERCENT SLOPES
CrA: CROSBY SILT LOAM, FINE-LOAMY SUBSOIL, 0 TO 2 PERCENT SLOPES
MnB2: MIAMI SILT LOAM, 2 TO 6 PERCENT SLOPES, ERODED

REFERENCE: USDA NATIONAL RESOURCES CONSERVATION SERVICE WEB SOIL SURVEY.

WETLAND INFORMATION:

THERE ARE NO WETLANDS ON THIS SITE.

FIRST AND SUBSEQUENT RECEIVING STREAM:

INITIAL RECEIVING WATER IS AMITY DITCH AND THE SUBSEQUENT RECEIVING WATER IS THE YOUNGS CREEK.

OWNER CONTACT:

DREW WARNER
WARNER RETAIL GROUP
350 MASSACHUSETTS AVE, STE 300
INDIANAPOLIS, IN 46203
317.523.1081
DWARNER@WARNERRETAIL.COM

ANTICIPATED TIMING:

CONSTRUCTION BEGIN:	TBD
CONSTRUCTION COMPLETE:	TBD

CONTRACTOR: T.B.D. _____
CONTACT: _____
PHONE NUMBER: _____

CONTRACTOR SHALL MAINTAIN A CONSTRUCTION LOG DOCUMENTING ALL GRADING AND STABILIZATION ACTIVITIES.

GPD GROUP, INC.
520 South Main Street, Suite 2531
Akron, OH 44311
330.572.2100 Fax: 330.572.2102

THIS SUBMITTAL IS FOR PERMITTING PURPOSES ONLY AND IS PRELIMINARY IN NATURE. AS SUCH, ANY OTHER USE OR RELIANCE IS STRICTLY PROHIBITED.

LEONARDO A. SFERRA
REGISTERED
No. 11600134
STATE OF INDIANA
PROFESSIONAL ENGINEER

02/07/19

CONTRACT DATE:	
BUILDING TYPE:	ME T40
PLAN VERSION:	
BRAND DESIGNER:	-
SITE NUMBER:	313327
STORE NUMBER:	2018088.55

TACO BELL

200 PARIS DRIVE
FRANKLIN, IN 44311

T40

SWPP NOTES

C-131

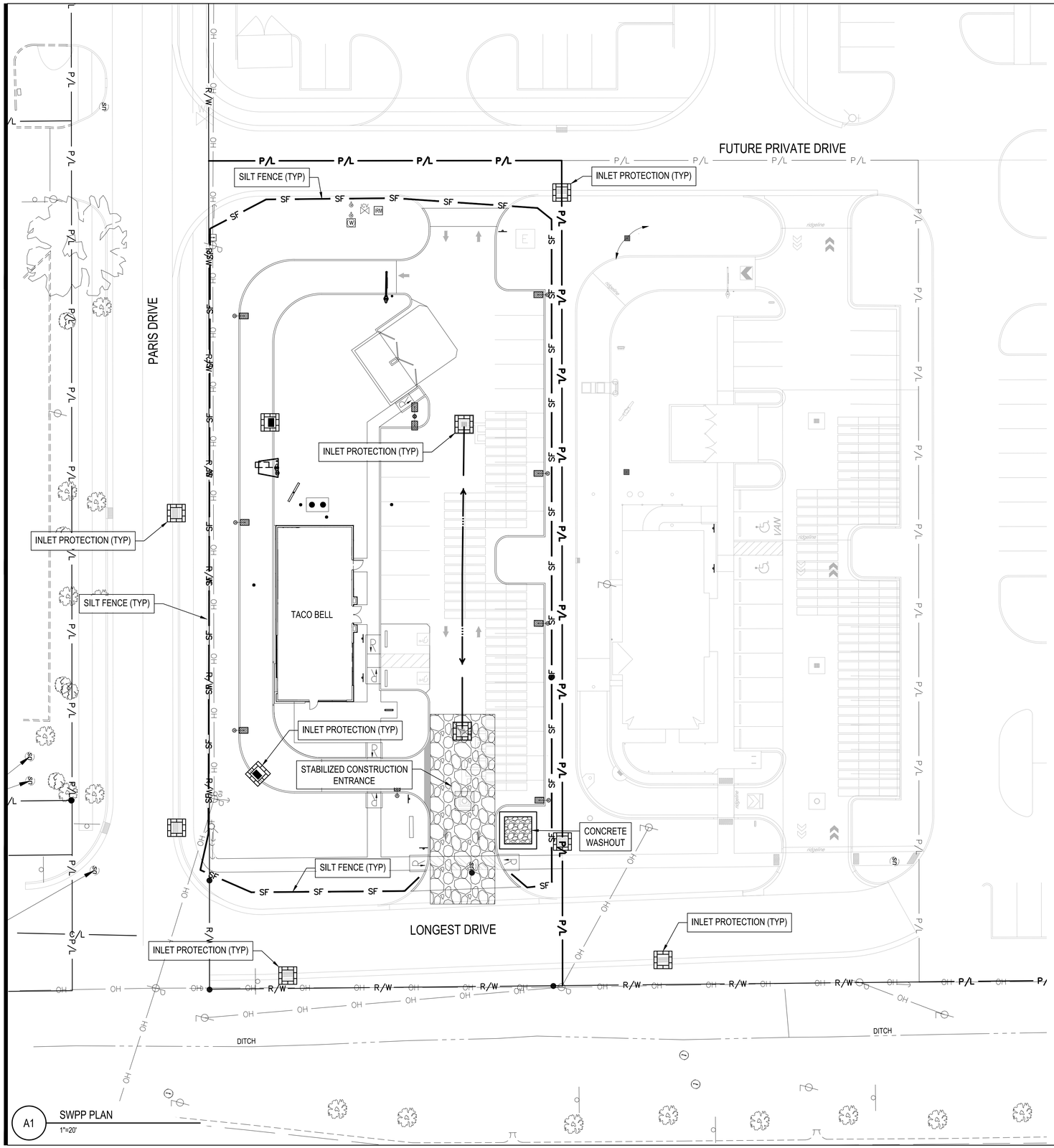

A1 SWPP PLAN
1"=20'

N

0 20
10 40
1"=20'
Horizontal Scale in Feet

LEGEND

(SEE SHEET C-001 FOR GENERAL LEGEND)

PROPOSED SILT BARRIER
REFER TO SWPP DETAILS

SF — PROPOSED SILT FENCE
REFER TO SWPP DETAILS

PROPOSED CONSTRUCTION ENTRANCE
REFER TO SWPP DETAILS

PROPOSED CONCRETE WASHOUT FACILITY
REFER TO SWPP DETAILS

"DON'T DIG BLIND"
"HOLEY MOLEY" SEZ:

Call Monday thru Friday – 7 am. to 6 pm.
1–800–382–5544
TOLL FREE
1–800–428–5200
OUTSIDE INDIANA

NOTICE TO CONTRACTOR

PER INDIANA STATE LAW 1S–69–1991, IT IS AGAINST THE LAW TO EXCAVATE WITHOUT NOTIFYING THE UNDERGROUND LOCATION SERVICE TWO (2) WORKING DAYS BEFORE COMMENCING WORK.

GPD GROUP, INC.
520 South Main Street, Suite 2531
Akron, OH 44311
330.572.2100 Fax: 330.572.2102

THIS SUBMITTAL IS FOR PERMITTING PURPOSES ONLY AND IS PRELIMINARY IN NATURE. AS SUCH, ANY OTHER USE OR RELIANCE IS STRICTLY PROHIBITED.

LEONARDO A. SFERRA
REGISTERED
No. 11600134
STATE OF INDIANA
PROFESSIONAL ENGINEER

02/07/19

CONTRACT DATE:	
BUILDING TYPE:	ME T40
PLAN VERSION:	
BRAND DESIGNER:	-
SITE NUMBER:	313327
STORE NUMBER:	2018088.55

TACO BELL

200 PARIS DRIVE
FRANKLIN, IN 44311

TACO BELL
T40

SWPP PLAN

C-132

MULCHING

1) MULCH AND OTHER APPROPRIATE VEGETATIVE PRACTICES SHALL BE APPLIED TO DISTURBED AREAS WITHIN 7 DAYS OF GRADING IF THE AREA IS TO REMAIN DORMANT (UNDISTURBED) FOR MORE THAN 21 DAYS OR ON AREAS AND PORTIONS OF THE SITE WHICH CAN BE BROUGHT TO FINAL GRADE.

2) MULCH SHALL CONSIST OF ONE OF THE FOLLOWING:

-STRAW SHALL BE UNROTTED SMALL GRAIN STRAW APPLIED AT THE RATE OF 2 TONS/AC. OR 90 LB./1,000 SQ. FT. (TWO TO THREE BALES) THE STRAW MULCH SHALL BE SPREAD UNIFORMLY BY HAND OR MECHANICALLY SO THE SOIL SURFACE IS COVERED. FOR UNIFORM DISTRIBUTION OF HAND-SPREAD MULCH, DIVIDE AREA INTO APPROXIMATELY 1,000 SQ. FT. SECTIONS AND PLACE TWO 45-LB BALES OF STRAW IN EACH SECTION.

-WOOD CELLULOSE FIBER SHOULD BE USED AT 2,000 LB.AC, OR 46 LB/1,000 SQ. FT.

-ACCEPTABLE MULCHES INCLUDE MULCH MATTINGS AND ROLLED EROSION CONTROL PRODUCTS APPLIED ACCORDING TO MANUFACTURER'S RECOMMENDATIONS OR WOOD MULCH/CHIPS APPLIED AT 10-20 TONS/AC.

3) MULCH SHALL BE ANCHORED IMMEDIATELY TO MINIMIZE LOSS BY WIND OR RUNOFF. THE FOLLOWING ARE ACCEPTABLE METHODS FOR ANCHORING MULCH.

-USE A DISK, CRIMPER, OR SIMILAR TYPE TOOL SET STRAIGHT TO PUNCH OR ANCHOR THE MULCH MATERIAL INTO THE SOIL. STRAW MECHANICALLY ANCHORED SHALL NOT BE FINELY CHOPPED BUT BE LEFT GENERALLY LONGER THAN 6 INCHES.

-USE MULCH NETTINGS ACCORDING TO THE MANUFACTURER'S RECOMMENDATIONS, FOLLOWING ALL PLACEMENT AND ANCHORING REQUIREMENTS. USE IN AREAS OF WATER CONCENTRATION AND STEEP SLOPES TO HOLD MULCH IN PLACE.

-FOR STRAW MULCH, SYNTHETIC BINDERS SUCH AS ACRYLIC DLR (AGRI-TAC), DCA-70, PETROSET, TERRA TACK OR EQUAL MAY BE USED AT RATES RECOMMENDED BY THE MANUFACTURER. ALL APPLICATIONS OF SYNTHETIC BINDERS MUST BE CONDUCTED IN SUCH A MANNER WHERE THERE IS NO CONTACT WITH WATERS OF THE STATE.

-WOOD CELLULOSE FIBER MAY BE USED FOR ANCHORING STRAW. THE FIBER BINDER SHALL BE APPLIED AT A NET DRY WEIGHT OF 750 LB/AC. THE WOOD CELLULOSE FIBER SHALL BE MIXED WITH WATER AND THE MIXTURE SHALL CONTAIN A MAXIMUM OF 50 LB/100 GAL. OF WOOD CELLULOSE FIBER.

DUST CONTROL

NOTES:
CONSTRUCTION SEQUENCING AND DISTURBING ONLY SMALL AREAS AT A TIME CAN GREATLY REDUCE PROBLEMATIC DUST FROM THE SITE. IF LAND MUST BE DISTURBED, ADDITIONAL TEMPORARY STABILIZATION MEASURES SHOULD BE CONSIDERED PRIOR TO DISTURBANCES.

1) APPLY TEMPORARY OR PERMANENT SEEDING AND MULCH TO AREAS THAT WILL REMAIN IDLE FOR OVER 14 DAYS. SAVING EXISTING TREES AND LARGE SHRUBS WILL ALSO REDUSE SOIL AND AIR MOVEMENT ACROSS DISTURBED AREAS.

2) SPRAY SITE WITH WATER UNTIL THE SURFACE IS WET BEFORE AND DURING GRADING AND REPEAT AS NEEDED, ESPECIALLY ON HAUL ROADS AND OTHER HEAVY TRAFFIC ROUTES. WATERING SHALL BE DONE AT A RATE THAT PREVENTS DUST BUT DOES NOT CAUSE SOIL EROSION. WETTING AGENTS SHALL BE UTILIZED ACCORDING TO MANUFACTURERS INSTRUCTIONS.

3) GRADED ROADWAYS AND OTHER SUITABLE AREAS WILL BE STABALIZED USING CRUSHED STONE OR COARSE GRAVEL AS SOON AS PRACTICABLE AFTER REACHING AN INTERIM OR FINAL GRADE. CRUSHED STONE OR COARSE GRAVEL CAN BE USED AS A PERMANENT COVER TO PROVIDE CONTROL OF SOIL EMISSIONS.

4) EXISTING WINDBREAK VEGETATION SHALL BE MARKED AND PRESERVED. SNOW FENCING OR OTHER SUITABLE BARRIER MAY BE PLACED PERPENDICULAR TO PREVAILING AIR CURRENTS AT INTERVALS OF ABOUT 15 TIMES THE BARRIER HEIGHTS TO CONTROL AIR CURRENTS AND BLOWING SOIL.

5) CALCIUM CHLORIDE MAY BE APPLIED BY MECHANICAL SPREADER AS LOOSE, DRY GRANULES OR FLAKES AT A RATE THAT KEEPS THE SURFACE MOIST BUT NOT SO HIGH AS TO CAUSE WATER POLLUTION OR PLANT DAMAGE. APPLICATION RATES SHOULD BE STRICTLY IN ACCORDANCE WITH SUPPLIERS' SPECIFIED RATES.

6) WHEN TEMPORARY DUST CONTROL MEASURES ARE USED; REPETITIVE TREATMENT SHOULD BE APPLIED AS NEED TO ACCOMPLISH CONTROL.

7) PAVED AREAS THAT HAVE ACCUMULATED SEDIMENT FROM CONSTRUCTION SHOULD BE CLEANED DAILY, OR AS NEEDED, UTILIZING A STREET SWEEPER OR BUCKET-TYPE ENDLOADER OR SCRAPER.

CONCRETE WASHOUT AS REQUIRED

MATERIALS

- MINIMUM OF TEN MILLIMETER POLYETHYLENE SHEETING THAT IS FREE OF HOLES, TEARS, AND OTHER DEFECTS. THE SHEETING SELECTED SHOULD BE OF AN APPROPRIATE SIZE TO FIT THE WASHOUT SYSTEM WITHOUT SEAMS OR OVERLAP OF THE LINING (DESIGNED AND INSTALLED SYSTEMS).
- SIGNAGE.
- ORANGE SAFETY FENCING OR EQUIVALENT.
- STRAW BALES, SANDBAGS (BAGS SHOULD BE ULTRAVIOLET-STABILIZED GEOTEXTILE FABRIC), SOIL MATERIAL, OR OTHER APPROPRIATE MATERIALS THAT CAN BE USED TO CONSTRUCT A CONTAINMENT SYSTEM (ABOVE GRADE SYSTEMS).
  - METAL PINS OR STAPLES AT A MINIMUM OF SIX INCHES IN LENGTH, SANDBAGS, OR ALTERNATIVE FASTENER TO SECURE POLYETHYLENE LINING TO THE CONTAINMENT SYSTEM.
  - NON-COLLAPSING AND NON-WATER HOLDING COVER FOR USE DURING RAIN EVENTS (OPTIONAL).

INSTALLATION

DESIGNED AND INSTALLED SYSTEMS

- UTILIZE AND FOLLOW THE DESIGN IN THE STORM WATER POLLUTION PREVENTION PLAN TO INSTALL THE SYSTEM.
- DEPENDENT UPON THE TYPE OF SYSTEM, EITHER EXCAVATE THE PIT OR INSTALL THE CONTAINMENT SYSTEM.
- A BASE SHALL BE CONSTRUCTED AND PREPARED THAT IS FREE OF ROCKS AND OTHER DEBRIS THAT MAY CAUSE TEARS OR PUNCTURES IN THE POLYETHYLENE LINING.
- INSTALL THE POLYETHYLENE LINING. FOR EXCAVATED SYSTEMS, THE LINING SHOULD EXTEND OVER THE ENTIRE EXCAVATION. THE LINING FOR BERMED SYSTEMS SHOULD BE INSTALLED OVER THE POOLING AREA WITH ENOUGH MATERIAL TO EXTEND THE LINING OVER THE BERM OR CONTAINMENT SYSTEM. THE LINING SHOULD BE SECURED WITH PINS, STAPLES, OR OTHER FASTENERS.
- PLACE FLAGS, SAFETY FENCING, OR EQUIVALENT TO PROVIDE A BARRIER TO CONSTRUCTION EQUIPMENT AND OTHER TRAFFIC.
- PLACE A NON-COLLAPSING, NON-WATER HOLDING COVER OVER THE WASHOUT FACILITY PRIOR TO A PREDICTED RAINFALL EVENT TO PREVENT ACCUMULATION OF WATER AND POSSIBLE OVERFLOW OF THE SYSTEM (OPTIONAL).
- INSTALL SIGNAGE THAT IDENTIFIES CONCRETE WASHOUT AREAS.
- POST SIGNS DIRECTING CONTRACTORS AND SUPPLIERS TO DESIGNATED LOCATIONS.
- WHERE NECESSARY, PROVIDE STABLE INGRESS AND EGRESS (SEE TEMPORARY CONSTRUCTION INGRESS/EGRESS PAD ON PAGE 17) OR ALTERNATIVE APPROACH PAD FOR CONCRETE WASHOUT SYSTEMS.

MAINTENANCE

- INSPECT DAILY AND AFTER EACH STORM EVENT.
- INSPECT THE INTEGRITY OF THE OVERALL STRUCTURE INCLUDING, WHERE APPLICABLE, THE CONTAINMENT SYSTEM.
- INSPECT THE SYSTEM FOR LEAKS, SPILLS, AND TRACKING OF SOIL BY EQUIPMENT.
- INSPECT THE POLYETHYLENE LINING FOR FAILURE, INCLUDING TEARS AND PUNCTURES.
- ONCE CONCRETE WASTES HARDEN, REMOVE AND DISPOSE OF THE MATERIAL.
- EXCESS CONCRETE SHOULD BE REMOVED WHEN THE WASHOUT SYSTEM REACHES 50 PERCENT OF THE DESIGN CAPACITY. USE OF THE SYSTEM SHOULD BE DISCONTINUED UNTIL APPROPRIATE MEASURES CAN BE INITIATED TO CLEAN THE STRUCTURE. PREFABRICATED SYSTEMS SHOULD ALSO UTILIZE THIS CRITERION, UNLESS THE MANUFACTURER HAS ALTERNATE SPECIFICATIONS.
- UPON REMOVAL OF THE SOLIDS, INSPECT THE STRUCTURE. REPAIR THE STRUCTURE AS NEEDED OR CONSTRUCT A NEW SYSTEM.
- DISPOSE OF ALL CONCRETE IN A LEGAL MANNER. REUSE THE MATERIAL ON SITE, RECYCLE, OR HAUL THE MATERIAL TO AN APPROVED CONSTRUCTION/DEMOLITION LANDFILL SITE. RECYCLING OF MATERIAL IS ENCOURAGED. THE WASTE MATERIAL CAN BE USED FOR MULTIPLE APPLICATIONS INCLUDING BUT NOT LIMITED TO ROADBEDS AND BUILDING. THE AVAILABILITY FOR RECYCLING SHOULD BE CHECKED LOCALLY.
- THE PLASTIC LINER SHOULD BE REPLACED AFTER EVERY CLEANING; THE REMOVAL OF MATERIAL WILL USUALLY DAMAGE THE LINING.
- THE CONCRETE WASHOUT SYSTEM SHOULD BE REPAIRED OR ENLARGED AS NECESSARY TO MAINTAIN CAPACITY FOR CONCRETE WASTE.
- CONCRETE WASHOUT SYSTEMS ARE DESIGNED TO PROMOTE EVAPORATION. HOWEVER, IF THE LIQUIDS DO NOT EVAPORATE AND THE SYSTEM IS NEAR CAPACITY IT MAY BE NECESSARY TO VACUUM OR REMOVE THE LIQUIDS AND DISPOSE OF THEM IN AN ACCEPTABLE METHOD. DISPOSAL MAY BE ALLOWED AT THE LOCAL SANITARY SEWER AUTHORITY PROVIDED THEIR NATIONAL POLLUTANT DISCHARGE ELIMINATION SYSTEM PERMITS ALLOW FOR ACCEPTANCE OF THIS MATERIAL. ANOTHER OPTION WOULD BE TO UTILIZE A SECONDARY CONTAINMENT SYSTEM OR BASIN FOR FURTHER DEWATERING.
- PREFABRICATED UNITS ARE OFTEN PUMPED AND THE COMPANY SUPPLYING THE UNIT PROVIDES THIS SERVICE.
- INSPECT CONSTRUCTION ACTIVITIES ON A REGULAR BASIS TO ENSURE SUPPLIERS, CONTRACTORS, AND OTHERS ARE UTILIZING DESIGNATED WASHOUT AREAS. IF CONCRETE WASTE IS BEING DISPOSED OF IMPROPERLY, IDENTIFY THE VIOLATORS AND TAKE APPROPRIATE ACTION.
- WHEN CONCRETE WASHOUT SYSTEMS ARE NO LONGER REQUIRED, THE CONCRETE WASHOUT SYSTEMS SHALL BE CLOSED. DISPOSE OF ALL HARDENED CONCRETE AND OTHER MATERIALS USED TO CONSTRUCT THE SYSTEM.
- HOLES, DEPRESSIONS AND OTHER LAND DISTURBANCES ASSOCIATED WITH THE SYSTEM SHOULD BE BACKFILLED, GRADED, AND STABILIZED.

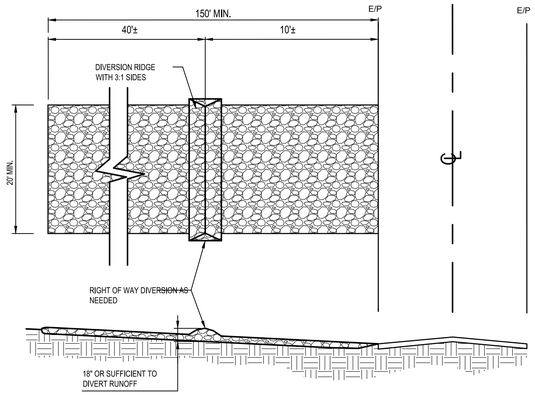

CONSTRUCTION ENTRANCE

N.T.S.

CONSTRUCTION ENTRANCE NOTES

MATERIALS

- ONE TO TWO AND ONE-HALF INCH DIAMETER WASHED AGGREGATE [INDIANA DEPARTMENT OF TRANSPORTATION COURSE AGGREGATE NO. 2 (SEE APPENDIX D)].
- ONE-HALF TO ONE AND ONE-HALF INCH DIAMETER WASHED AGGREGATE [INDOT CA NO. 53 (SEE APPENDIX D)].
- GEOTEXTILE FABRIC UNDERLAYMENT (SEE APPENDIX C) (USED AS A SEPARATION LAYER TO PREVENT INTERMIXING OF AGGREGATE AND THE UNDERLYING SOIL MATERIAL AND TO PROVIDE GREATER BEARING STRENGTH WHEN ENCOUNTERING WET CONDITIONS OR SOILS WITH A SEASONAL HIGH WATER TABLE LIMITATION).

INSTALLATION

1. REMOVE ALL VEGETATION AND OTHER OBJECTIONABLE MATERIAL FROM THE FOUNDATION AREA.
2. GRADE FOUNDATION AND CROWN FOR POSITIVE DRAINAGE. IF THE SLOPE OF THE CONSTRUCTION ENTRANCE IS TOWARD A PUBLIC ROAD AND EXCEEDS TWO PERCENT, CONSTRUCT AN EIGHT INCH HIGH DIVERSION RIDGE WITH A RATIO OF 3-TO-1 SIDE SLOPES ACROSS THE FOUNDATION AREA ABOUT 15 FEET FROM THE ENTRANCE TO DIVERT RUNOFF AWAY FROM THE ROAD (SEE TEMPORARY CONSTRUCTION INGRESS/EGRESS PAD CROSS-SECTION VIEW WORKSHEET).
3. INSTALL A CULVERT PIPE UNDER THE PAD IF NEEDED TO MAINTAIN PROPER PUBLIC ROAD DRAINAGE.
4. IF WET CONDITIONS ARE ANTICIPATED, PLACE GEOTEXTILE FABRIC ON THE GRADED FOUNDATION TO IMPROVE STABILITY.
5. PLACE AGGREGATE (INDOT CA NO. 2) TO THE DIMENSIONS AND GRADE SHOWN IN THE CONSTRUCTION PLANS, LEAVING THE SURFACE SMOOTH AND SLOPED FOR DRAINAGE.
6. TOP-DRESS THE FIRST 50 FEET ADJACENT TO THE PUBLIC ROADWAY WITH TWO TO THREE INCHES OF WASHED AGGREGATE (INDOT CA NO. 53) [OPTIONAL, USED PRIMARILY WHERE THE PURPOSE OF THE PAD IS TO KEEP SOIL FROM ADHERING TO VEHICLE TIRES].
7. WHERE POSSIBLE, DIVERT ALL STORM WATER RUNOFF AND DRAINAGE FROM THE INGRESS/EGRESS PAD TO A SEDIMENT TRAP OR BASIN.

MAINTENANCE

- INSPECT DAILY.
- RESHAPE PAD AS NEEDED FOR DRAINAGE AND RUNOFF CONTROL.
- TOP DRESS WITH CLEAN AGGREGATE AS NEEDED.
- IMMEDIATELY REMOVE MUD AND SEDIMENT TRACKED OR WASHED ONTO PUBLIC ROADS.
- FLUSHING SHOULD ONLY BE USED IF THE WATER CAN BE CONVEYED INTO A SEDIMENT TRAP OR BASIN.

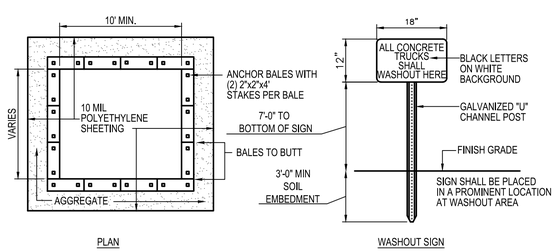

PLAN

WASHOUT SIGN

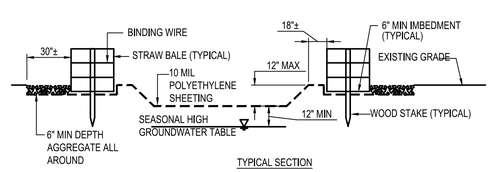

TYPICAL SECTION

N.T.S.

SITE INSPECTIONS SHALL BE DONE WEEKLY AND AFTER EVERY RAINFALL EVENT EXCEEDING 1/2" OF RAINFALL. ALL NECESSARY REPAIRS SHOULD BE IMPLEMENTED IMMEDIATELY AFTER SUCH INSPECTIONS.

CONTRACTOR SHALL BE RESPONSIBLE FOR PREPARING WEEKLY EROSION CONTROL INSPECTION REPORTS. SUCH REPORTS SHALL BE MADE AVAILABLE TO OWNER, ENGINEER AND CITY / STATE OFFICIALS UPON THEIR REQUEST.

SWPPP AMENDMENT LOG

PROJECT NAME: _____

SWPPP CONTACT: _____

AMENDMENT No.	DATE OF AMENDMENT	AMENDMENT PREPARED BY [NAME(S) AND TITLE]	DESCRIPTION OF THE AMENDMENT
1			
2			
3			
4			
5			
6			

GRADING AND STABILIZATION LOG

PROJECT NAME: _____

SWPPP CONTACT: _____

DATE GRADING ACTIVITY INITIATED	TEMPORARY OR PERMANENT ACTIVITY	LOCATION AND DESCRIPTION OF THE GRADING ACTIVITY	DATE GRADING ACTIVITY CEASED	DATE OF STABILIZATION MEASURES INITIATED	DESCRIPTION OF THE STABILIZATION MEASURE AND LOCATION

GPD GROUP, INC.
520 South Main Street, Suite 2531
Akron, OH 44311
330.572.2100 Fax: 330.572.2102

THIS SUBMITTAL IS FOR PERMITTING PURPOSES ONLY AND IS PRELIMINARY IN NATURE. AS SUCH, ANY OTHER USE OR RELIANCE IS STRICTLY PROHIBITED.

LEONARDO A. SFERRA
REGISTERED
No. 11600134
STATE OF INDIANA
PROFESSIONAL ENGINEER

02/07/19

CONTRACT DATE:
BUILDING TYPE: ME T40
PLAN VERSION:
BRAND DESIGNER: -
SITE NUMBER: 313327
STORE NUMBER: 2018088.55

TACO BELL
200 PARIS DRIVE
FRANKLIN, IN 44311

T40

SWPP NOTES AND DETAILS

C-133

PERMANENT SEEDING

MATERIALS

- SOIL AMENDMENTS – SELECT MATERIALS AND RATES AS DETERMINED BY A SOIL TEST (CONTACT YOUR COUNTY SOIL AND WATER CONSERVATION DISTRICT OR COOPERATIVE EXTENSION OFFICE FOR ASSISTANCE AND SOIL INFORMATION, INCLUDING AVAILABLE SOIL TESTING SERVICES) OR 400 TO 600 POUNDS OF 12-12-12 ANALYSIS FERTILIZER, OR EQUIVALENT. CONSIDER THE USE OF REDUCED PHOSPHORUS APPLICATION WHERE SOIL TESTS INDICATE ADEQUATE PHOSPHOROUS LEVELS IN THE SOIL PROFILE.
- SEED – SELECT AN APPROPRIATE PLANT SPECIES SEED OR SEED MIXTURE ON THE BASIS OF SOIL TYPE, SOIL PH, REGION OF THE STATE, TIME OF YEAR, AND INTENDED LAND USE OF THE AREA TO BE SEEDED (SEE TABLE 1).
- MULCH –
  - STRAW, HAY, WOOD FIBER, ETC. (TO PROTECT SEEDBED, RETAIN MOISTURE, AND ENCOURAGE PLANT GROWTH).
  - ANCHORED TO PREVENT REMOVAL BY WIND OR WATER OR COVERED WITH PREMANUFACTURED EROSION CONTROL BLANKETS.

APPLICATION

SITE PREPARATION
1. 1. GRADE THE SITE TO ACHIEVE POSITIVE DRAINAGE.
2. ADD TOPSOIL (SEE TOPSOIL SALVAGE AND UTILIZATION ON PAGE 25) OR COMPOST MULCH (SEE COMPOST MULCHING ON PAGE 59) TO ACHIEVE NEEDED DEPTH FOR ESTABLISHMENT OF VEGETATION. (COMPOST MATERIAL MAY BE ADDED TO IMPROVE SOIL MOISTURE HOLDING CAPACITY, SOIL FRIABILITY, AND NUTRIENT AVAILABILITY.)

SEEDBED PREPARATION
1. TEST SOIL TO DETERMINE PH AND NUTRIENT LEVELS.
2. APPLY SOIL AMENDMENTS AS RECOMMENDED BY THE SOIL TEST AND WORK INTO THE UPPER TWO TO FOUR INCHES OF SOIL. IF TESTING IS NOT DONE, APPLY 400 TO 600 POUNDS PER ACRE OF 12-12-12 ANALYSIS FERTILIZER, OR EQUIVALENT.
3. TILL THE SOIL TO OBTAIN A UNIFORM SEEDBED. USE A DISK OR RAKE, OPERATED ACROSS THE SLOPE, TO WORK THE SOIL AMENDMENTS INTO THE UPPER TWO TO FOUR INCHES OF THE SOIL.

SEEDING
OPTIMUM SEEDING DATES ARE MARCH 1 TO MAY 10 AND AUGUST 10 TO SEPTEMBER 30. PERMANENT SEEDING DONE BETWEEN MAY 10 AND AUGUST 10 MAY NEED TO BE IRRIGATED. SEEDING OUTSIDE OR BEYOND OPTIMUM SEEDING DATES IS STILL POSSIBLE WITH THE UNDERSTANDING THAT RESEEDING OR OVERSEEDING MAY BE REQUIRED IF ADEQUATE SURFACE APPLICATION OCTOBER 2007 CHAPTER 7 37 COVER IS NOT ACHIEVED. RESEEDING OR OVERSEEDING CAN BE EASILY ACCOMPLISHED IF THE SOIL SURFACE REMAINS WELL PROTECTED WITH MULCH.

1. SELECT A SEEDING MIXTURE AND RATE FROM TABLE 1. SELECT SEED MIXTURE BASED ON SITE CONDITIONS, SOIL PH, INTENDED LAND USE, AND EXPECTED LEVEL OF MAINTENANCE.
2. APPLY SEED UNIFORMLY WITH A DRILL OR CULTIPACKER SEEDER (SEE FIGURE 1) OR BY BROADCASTING (SEE FIGURE 2). PLANT OR COVER THE SEED TO A DEPTH OF ONE-FOURTH TO ONE-HALF INCH. IF DRILLING OR BROADCASTING THE SEED, ENSURE GOOD SEED-TO-SOIL CONTACT BY FIRMING THE SEEDBED WITH A ROLLER OR CULTIPACKER AFTER COMPLETING SEEDING OPERATIONS. (IF SEEDING IS DONE WITH A HYDROSEEDER (SEE FIGURE 3), FERTILIZER AND MULCH CAN BE APPLIED WITH THE SEED IN A SLURRY MIXTURE.)
3. MULCH ALL SEEDED AREAS (SEE MULCHING ON PAGE 55 AND COMPOST MULCHING ON PAGE 59) AND USE APPROPRIATE METHODS TO ANCHOR THE MULCH IN PLACE. CONSIDER USING EROSION CONTROL BLANKETS ON SLOPING AREAS AND CONVEYANCE CHANNELS (SEE EROSION CONTROL BLANKET ON PAGE 63).

MAINTENANCE

- INSPECT WITHIN 24 HOURS OF EACH RAIN EVENT AND AT LEAST ONCE EVERY SEVEN CALENDAR DAYS UNTIL THE VEGETATION IS SUCCESSFULLY ESTABLISHED.
- CHARACTERISTICS OF A SUCCESSFUL STAND INCLUDE VIGOROUS DARK GREEN OR BLUISHGREEN SEEDLINGS WITH A UNIFORM VEGETATIVE COVER DENSITY OF 90 PERCENT OR MORE.
- CHECK FOR EROSION OR MOVEMENT OF MULCH.
- REPAIR DAMAGED, BARE, GULLIED, OR SPARSELY VEGETATED AREAS AND THEN FERTILIZE, RESEED, AND APPLY AND ANCHOR MULCH.
- IF PLANT COVER IS SPARSE OR PATCHY, EVALUATE THE PLANT MATERIALS CHOSEN, SOIL FERTILITY, MOISTURE CONDITION, AND MULCH APPLICATION; REPAIR AFFECTED AREAS EITHER BY OVERSEEDING OR PREPARING A NEW SEEDBED AND RESEEDING. APPLY AND ANCHOR MULCH ON THE NEWLY SEEDED AREAS.
- IF VEGETATION FAILS TO GROW, CONSIDER SOIL TESTING TO DETERMINE SOIL PH OR NUTRIENT DEFICIENCY PROBLEMS. (CONTACT YOUR SOIL AND WATER CONSERVATION DISTRICT OR COOPERATIVE EXTENSION OFFICE FOR ASSISTANCE.)
- IF ADDITIONAL FERTILIZATION IS NEEDED TO GET A SATISFACTORY STAND, DO SO ACCORDING TO SOIL TEST RECOMMENDATIONS.
- ADD FERTILIZER THE FOLLOWING GROWING SEASON. FERTILIZE ACCORDING TO SOIL TEST RECOMMENDATIONS.
- FERTILIZE TURF AREAS ANNUALLY. APPLY FERTILIZER IN A SPLIT APPLICATION. FOR COOL-SEASON GRASSES, APPLY ONE-HALF OF THE FERTILIZER IN LATE SPRING AND ONEHALF IN EARLY FALL. FOR WARM-SEASON GRASSES, APPLY ONE-THIRD IN EARLY SPRING, ONE-THIRD IN LATE SPRING, AND THE REMAINING ONE-THIRD IN MIDDLE SUMMER.

TABLE 1. PERMANENT SEEDING RECOMMENDATIONS
THIS TABLE PROVIDES SEVERAL SEED MIXTURE OPTIONS. ADDITIONAL SEED MIXTURES ARE AVAILABLE COMMERCIALLY. WHEN SELECTING A MIXTURE, CONSIDER INTENDED LAND USE AND SITE CONDITIONS, INCLUDING SOIL PROPERTIES (E.G., SOIL PH AND DRAINAGE), SLOPE ASPECT, AND THE TOLERANCE OF EACH SPECIES TO SHADE AND DROUGHT.

PERMANENT SEEDING

Table 1. Permanent Seeding Recommendations

This table provides several seed mixture options. Additional seed mixtures are available commercially. When selecting a mixture, consider intended land use and site conditions, including soil properties (e.g., soil pH and drainage), slope aspect, and the tolerance of each species to shade and drought.

Open Low-Maintenance Areas
(remaining idle more than six months)

Seed Mixtures	Rate per Acre Pure Live Seed	Optimum Soil pH
1. Perennial ryegrass - white clover[1]	70 lbs. 2 lbs.	5.6 to 7.0
2. Perennial ryegrass - tall fescue[2]	70 lbs. 50 lbs.	5.6 to 7.0
3. Tall fescue[2] - white clover[1]	70 lbs. 2 lbs.	5.5 to 7.5

Steep Banks and Cuts, Low-Maintenance Areas (not mowed)

Seed Mixtures	Rate per Acre Pure Live Seed	Optimum Soil pH
1. Smooth brome grass - red clover[1]	35 lbs. 20 lbs.	5.5 to 7.0
2. Tall fescue[2] - white clover[1]	50 lbs. 2 lbs.	5.5 to 7.5
3. Tall fescue[2] - red clover[1]	50 lbs. 20 lbs.	5.5 to 7.5
4. Orchard grass - red clover[1] - white clover[1]	30 lbs. 20 lbs. 2 lbs.	5.6 to 7.0
5. Crownvetch[1] - tall fescue[2]	12 lbs. 30 lbs.	5.6 to 7.0

Lawns and High-Maintenance Areas

Seed Mixtures	Rate per Acre Pure Live Seed	Optimum Soil pH
1. Bluegrass	140 lbs.	5.5 to 7.0
2. Perennial ryegrass (turf type)	60 lbs. 90 lbs.	5.6 to 7.0
3. Tall fescue (turf type)[2] - bluegrass	170 lbs. 30 lbs.	5.6 to 7.5

PERMANENT SEEDING (CONT'D)

Channels and Areas of Concentrated Flow

Seed Mixtures	Rate per Acre Pure Live Seed	Optimum Soil pH
1. Perennial ryegrass - white[1]	150 lbs. 2 lbs.	5.5 to 7.0
2. Kentucky bluegrass - smooth bromegrass - switchgrass - timothy - perennial ryegrass - white clover [2]	20 lbs. 10 lbs. 3 lbs. 4 lbs. 10 lbs. 2 lbs.	5.5 to 7.5
3. Tall fescue[1] - white clover [2]	150 lbs. 2 lbs.	5.5 to 7.5
4. Tall fescue[2] - perennial ryegrass - Kentucky bluegrass	150 lbs. 20 lbs. 20 lbs.	5.5 to 7.5

1. FOR BEST RESULTS: (A) LEGUME SEED SHOULD BE INOCULATED; (B) SEEDING MIXTURES CONTAINING LEGUMES SHOULD PREFERABLY BE SPRING-SEEDED, ALTHOUGH THE GRASS MAY BE FALL-SEEDED AND THE LEGUME FROST-SEEDED (SEE DORMANT SEEDING AND FROST SEEDING ON PAGE 41); AND
(C) IF LEGUMES ARE FALL-SEEDED, DO SO IN EARLY FALL.

2. TALL FESCUE PROVIDES LITTLE COVER FOR, AND MAY BE TOXIC TO SOME SPECIES OF WILDLIFE. THE INDIANA DEPARTMENT OF NATURAL RESOURCES RECOGNIZES THE NEED FOR ADDITIONAL RESEARCH ON ALTERNATIVES SUCH AS BUFFALOGRASS, ORCHARDGRASS, SMOOTH BROMEGRASS, AND SWITCHGRASS. THIS RESEARCH, IN CONJUNCTION WITH DEMONSTRATION AREAS, SHOULD FOCUS ON EROSION CONTROL CHARACTERISTICS, WILDLIFE TOXICITY, TURF DURABILITY, AND DROUGHT RESISTANCE.

NOTES:
1. AN OAT OR WHEAT COMPANION OR NURSE CROP MAY BE USED WITH ANY OF THE ABOVE PERMANENT SEEDING MIXTURES, AT THE FOLLOWING RATES:
(A) SPRING OATS – ONE-FOURTH TO THREE-FOURTHS BUSHEL PER ACRE
(B) WHEAT – NO MORE THAN ONE-HALF BUSHEL PER ACRE

2. A HIGH POTENTIAL FOR FERTILIZER, SEED, AND MULCH TO WASH EXISTS ON STEEP BANKS, CUTS, AND IN CHANNELS AND AREAS OF CONCENTRATED FLOW.

TEMPORARY SEEDING

MATERIALS

- SOIL AMENDMENTS - SELECT MATERIALS AND RATES AS DETERMINED BY A SOIL TEST (CONTACT YOUR COUNTY SOIL AND WATER CONSERVATION DISTRICT OR COOPERATIVE EXTENSION OFFICE FOR ASSISTANCE AND SOIL INFORMATION, INCLUDING AVAILABLE SOIL TESTING SERVICES) OR 400 TO 600 POUNDS OF 12-12-12 ANALYSIS FERTILIZER, OR EQUIVALENT. CONSIDER THE USE OF REDUCED PHOSPHORUS APPLICATION WHERE SOIL TESTS INDICATE ADEQUATE PHOSPHOROUS LEVELS IN THE SOIL PROFILE.
- SEED - SELECT APPROPRIATE PLANT SPECIES SEED OR SEED MIXTURES ON THE BASIS OF QUICK GERMINATION, GROWTH, AND TIME OF YEAR TO BE SEEDED (SEE TABLE 1).
- MULCH -
  - STRAW, HAY, WOOD FIBER, ETC. (TO PROTECT SEEDBED, RETAIN MOISTURE, AND ENCOURAGE PLANT GROWTH).
  - ANCHORED TO PREVENT REMOVAL BY WIND OR WATER OR COVERED WITH MANUFACTURED EROSION CONTROL BLANKETS.

TABLE 1. TEMPORARY SEEDING SPECIFICATIONS

Seed Species[1]	Rate per Acre	Planting Depth	Optimum Dates[2]
Wheat or Rye	150 lbs.	1 to 1½ inches	Sept. 15 – Oct. 30
Spring Oats	100 lbs.	1 inch	March 1 – April 15
Annual Ryegrass	40 lbs.	¼ inch	March 1 – May 1 Aug. 1 – Sept. 1
German Millet	40 lbs.	1 to 2 inches	May 1 – June 1
Sudangrass	35 lbs.	1 to 2 inches	May 1 – July 30
Buckwheat	60 lbs.	1 to 2 inches	April 15 – June 1
Corn (*broadcast*)	300 lbs.	1 to 2 inches	May 11 – Aug. 10
Sorghum	35 lbs.	1 to 2 inches	May 1 – July 15

1. PERENNIAL SPECIES MAY BE USED AS A TEMPORARY COVER, ESPECIALLY IF THE AREA TO BE SEEDED WILL REMAIN IDLE FOR MORE THAN ONE YEAR (SEE PERMANENT SEEDING ON PAGE 35).

2. SEEDING DONE OUTSIDE THE OPTIMUM SEEDING DATES INCREASES THE CHANCES OF SEEDING FAILURE. DATES MAY BE EXTENDED OR SHORTENED BASED ON THE LOCATION OF THE PROJECT SITE WITHIN THE STATE.

NOTES:

MULCH ALONE IS AN ACCEPTABLE TEMPORARY COVER AND MAY BE USED IN LIEU OF TEMPORARY SEEDING, PROVIDED THAT IT IS APPROPRIATELY ANCHORED.

A HIGH POTENTIAL FOR FERTILIZER, SEED, AND MULCH TO WASH EXISTS ON STEEP BANKS, CUTS, AND IN CHANNELS AND AREAS OF CONCENTRATED FLOW.

APPLICATION

SEEDBED PREPARATION
1. TEST SOIL TO DETERMINE PH AND NUTRIENT LEVELS.
2. APPLY SOIL AMENDMENTS AS RECOMMENDED BY THE SOIL TEST. IF TESTING IS NOT DONE, APPLY 400 TO 600 POUNDS PER ACRE OF 12-12-12 ANALYSIS FERTILIZER, OR EQUIVALENT.
3. WORK THE SOIL AMENDMENTS INTO THE UPPER TWO TO FOUR INCHES OF THE SOIL WITH A DISK OR RAKE OPERATED ACROSS THE SLOPE.

SEEDING
1. SELECT A SEED SPECIES OR AN APPROPRIATE SEED MIXTURE AND APPLICATION RATE FROM TABLE 1.
2. APPLY SEED UNIFORMLY WITH A DRILL OR CULTIPACKER SEEDER OR BY BROADCASTING. PLANT OR COVER SEED TO THE DEPTH SHOWN IN TABLE 1.

NOTES:
- IF DRILLING OR BROADCASTING THE SEED, ENSURE GOOD SEED-TO-SOIL CONTACT BY FIRMING THE SEEDBED WITH A ROLLER OR CULTIPACKER AFTER COMPLETING SEEDING OPERATIONS.
- DAILY SEEDING WHEN THE SOIL IS MOIST IS USUALLY MOST EFFECTIVE.
- IF SEEDING IS DONE WITH A HYDROSEEDER, FERTILIZER AND MULCH CAN BE APPLIED WITH THE SEED IN A SLURRY MIXTURE.

3. APPLY MULCH AND ANCHOR IT IN PLACE.

MAINTENANCE

- INSPECT WITHIN 24 HOURS OF EACH RAIN EVENT AND AT LEAST ONCE EVERY SEVEN CALENDAR DAYS.
- CHECK FOR EROSION OR MOVEMENT OF MULCH AND REPAIR IMMEDIATELY.
- MONITOR FOR EROSION DAMAGE AND ADEQUATE COVER (80 PERCENT DENSITY); RESEED, FERTILIZE, AND APPLY MULCH WHERE NECESSARY.
- IF NITROGEN DEFICIENCY IS APPARENT, TOP-DRESS FALL SEEDED WHEAT OR RYE SEEDING WITH 50 POUNDS PER ACRE OF NITROGEN IN FEBRUARY OR MARCH.

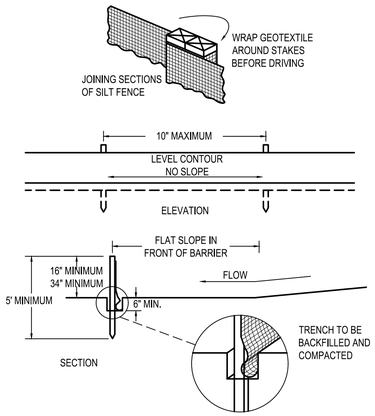

SILT FENCE

N.T.S.

TABLE 1 SLOPE STEEPNESS RESTRICTIONS

PERCENT SLOPE		MAXIMUM DISTANCE
< 2%	< 50:1	100 FEET
2% - 5%	50:1 TO 20:1	75 FEET
5% - 10%**	20:1 TO 10:1	50 FEET
10% - 20%**	10:1 TO 5:1	25 FEET
> 20%**	> 5:1	15 FEET

** CONSIDER OTHER ALTERNATIVES

TABLE 2 GEOTEXTILE FABRIC SPECIFICATIONS FOR SILT FENCE (MINIMUM)

PHYSICAL PROPERTIES	WOVEN GEOTEXTILE FABRIC	NON-WOVEN GEOTEXTILE FABRIC
FILTERING EFFICIENCY	85%	85%
TEXTILE STRENGTH AT 20% ELEGATION STANDARD STRENGTH EXTRA STRENGTH	 30 LBS PER LINEAR INCH 50 LBS PER LINEAR INCH	 30 LBS PER LINEAR INCH 50 LBS PER LINEAR INCH
SLURRY FLOW RATE	0.3 GAL/MIN/SQUARE FEET	4.5 GAL/MIN/SQUARE FEET
WATER FLOW RATE	15 GAL/MIN/SQUARE FEET	220 GAL/MIN/SQUARE FEET
UV RESISTANCE	70%	85%
POST SPACING	7 FEET	5 FEET

SILT FENCE NOTES

MATERIALS

- FABRIC – WOVEN OR NON-WOVEN GEOTEXTILE FABRIC MEETING SPECIFIED MINIMUMS OUTLINED IN TABLE 2.
- HEIGHT - A MINIMUM OF 18" ABOVE GROUND LEVEL (30 INCHES MANIMUM).
- REINFORCEMENT – FABRIC SECURELY FASTENED TO POSTS WITH WOOD LATHE.
- SUPPORT POSTS
  - 2 X 2 INCH HARDWOOD POSTS. STEEL FENCE POSTS MAY BE SUBSTITUTED FOR HARDWOOD POSTS (STEEL POSTS SHOULD HAVE PROJECTIONS FOR FASTENING FABRIC).
  - SPACING
    EIGHT FEET MAXIMUM IF FENCE IS SUPPORTED BY WIRE MESH FENCING.
    SIX FEET MAXIMUM FOR EXTRA-STRENGTH FABRIC WITHOUT WIRE BACKING.

INSTALLATION

1. LAY OUT THE LOCATION OF THE FENCE SO THAT IT IS PARALLEL TO THE CONTOUR OF THE SLOPE AND AT LEAST 10 FEET BEYOND THE TOE OF THE SLOPE TO PROVIDE A SEDIMENT STORAGE AREA. TURN THE ENDS OF THE FENCE UP SLOPE SUCH THAT THE POINT OF CONTACT BETWEEN THE GROUND AND THE BOTTOM OF THE FENCE END TERMINATES AT A HIGHER ELEVATION THAN THE TOP OF THE FENCE AT ITS LOWEST POINT (SEE EXHIBIT 1).
2. EXCAVATE AN EIGHT-INCH DEEP BY FOUR-INCH WIDE TRENCH ALONG THE ENTIRE LENGTH OF THE FENCE LINE (SEE EXHIBIT 2). INSTALLATION BY PLOWING IS ALSO ACCEPTABLE.
3. INSTALL THE SILT FENCE WITH THE FILTER FABRIC LOCATED ON THE UP-SLOPE SIDE OF THE EXCAVATED TRENCH AND THE SUPPORT POSTS ON THE DOWN-SLOPE SIDE OF THE TRENCH.
4. DRIVE THE SUPPORT POSTS AT LEAST 18 INCHES INTO THE GROUND, TIGHTLY STRETCHING THE FABRIC BETWEEN THE POSTS AS EACH IS DRIVEN INTO THE SOIL. A MINIMUM OF 12 INCHES OF THE FILTER FABRIC SHOULD EXTEND INTO THE TRENCH. (IF IT IS NECESSARY TO JOIN THE ENDS OF TWO FENCES, USE THE WRAP JOINT METHOD SHOWN IN EXHIBIT 3.)
5. LAY THE LOWER FOUR INCHES OF FILTER FABRIC ON THE BOTTOM OF THE TRENCH AND EXTEND IT TOWARD THE UP-SLOPE SIDE OF THE TRENCH.
6. BACKFILL THE TRENCH WITH SOIL MATERIAL AND COMPACT IT IN PLACE.

NOTE: IF THE SILT FENCE IS BEING CONSTRUCTED ON-SITE, ATTACH THE FILTER FABRIC TO THE SUPPORT POSTS (REFER TO TABLES 1 AND 2 FOR SPACING AND GEOTEXTILE SPECIFICATIONS) AND ATTACH WOODEN LATHE TO SECURE THE FABRIC TO THE POSTS. ALLOW FOR AT LEAST 12 INCHES OF FABRIC BELOW GROUND LEVEL. COMPLETE THE SILT FENCE INSTALLATION, FOLLOWING STEPS 1 THROUGH 6 ABOVE.

MAINTENANCE
- INSPECT WITHIN 24 HOURS OF A RAIN EVENT AND AT LEAST ONCE EVERY SEVEN CALENDAR DAYS.
- IF FENCE FABRIC TEARS, STARTS TO DECOMPOSE, OR IN ANY WAY BECOMES INEFFECTIVE, REPLACE THE AFFECTED PORTION IMMEDIATELY. NOTE: ALL REPAIRS SHOULD MEET SPECIFICATIONS AS OUTLINED WITHIN THIS MEASURE.
- REMOVE DEPOSITED SEDIMENT WHEN IT IS CAUSING THE FILTER FABRIC TO BULGE OR WHEN IT REACHES ONE-HALF THE HEIGHT OF THE FENCE AT ITS LOWEST POINT. WHEN CONTRIBUTING DRAINAGE AREA HAS BEEN STABILIZED, REMOVE THE FENCE AND SEDIMENT DEPOSITS, GRADE THE SITE TO BLEND WITH THE SURROUNDING AREA, AND STABILIZE.

TEMPORARY DROP INLET PROTECTION NOTES

MATERIALS

- SUPPORT POSTS
- 2 X 2 INCH OR 2 X 4 INCH HARDWOOD POSTS.
- THREE FEET LENGTH, MINIMUM.
- 1 X 2 INCH OR 1 X 3 INCH HARDWOOD CROSS BRACING LUMBER.
- LATHE.
- STAPLES OR NAILS.
- GEOTEXTILE FABRIC

INSTALLATION

1. DIG AN EIGHT-INCH DEEP, FOUR-INCH WIDE TRENCH AROUND THE PERIMETER OF THE INLET.
2. IF USING PRE-ASSEMBLED GEOTEXTILE FABRIC AND POSTS, DRIVE THE POSTS INTO THE SOIL, TIGHTLY STRETCHING THE GEOTEXTILE FABRIC BETWEEN POSTS AS EACH IS DRIVEN. (POSTS MUST BE PLACED ON THE INLET SIDE OF THE ANCHOR TRENCH WITH THE GEOTEXTILE FABRIC ON THE SIDE OF THE TRENCH FARTHEST FROM THE INLET.)

NOTE: IF ASSEMBLING THE GEOTEXTILE FABRIC AND POSTS ON-SITE, DRIVE THE POSTS INTO THE SOIL AND THEN SECURE THE GEOTEXTILE FABRIC TO THE POSTS BY PLACING A PIECE OF LATHE OVER THE FABRIC AND FASTENING IT TO THE POST (STRETCHING THE FABRIC BETWEEN POSTS AS IT IS FASTENED).

3. USE THE WRAP JOIN METHOD WHEN JOINING POSTS (SEE SILT FENCE ON PAGE 215).
4. PLACE THE BOTTOM 12 INCHES OF GEOTEXTILE FABRIC INTO THE EIGHT-INCH DEEP TRENCH, LAYING THE REMAINING FOUR INCHES IN THE BOTTOM OF THE TRENCH AND EXTENDING AWAY FROM THE INLET.
5. BACKFILL THE TRENCH WITH SOIL MATERIAL AND COMPACT IT IN PLACE.
6. BRACE THE POSTS BY NAILING BRACES INTO EACH CORNER POST OR UTILIZE RIGID PANELS TO SUPPORT FABRIC.

NOTE: IN SITUATIONS WHERE STORM WATER MAY BYPASS THE STRUCTURE,
- SET THE TOP OF THE GEOTEXTILE FABRIC FILTER AT LEAST SIX INCHES LOWER THAN THE GROUND ELEVATION ON THE DOWN-SLOPE SIDE OF THE STORM DRAIN INLET,
- BUILD A TEMPORARY DIKE, COMPACTED TO SIX INCHES HIGHER THAN THE FABRIC, ON THE DOWN-SLOPE SIDE OF THE STORM DRAIN INLET, AND/OR
- USE IN CONJUNCTION WITH EXCAVATED DROP INLET PROTECTION.

MAINTENANCE

- INSPECT DAILY.
- INSPECT GEOTEXTILE FABRIC AND MAKE NEEDED REPAIRS IMMEDIATELY.
- REMOVE SEDIMENT FROM POOL AREA TO PROVIDE STORAGE FOR THE NEXT STORM EVENT. AVOID DAMAGING OR UNDERCUTTING FABRIC DURING SEDIMENT REMOVAL.
- WHEN CONTRIBUTING DRAINAGE AREA HAS BEEN STABILIZED, REMOVE SEDIMENT, PROPERLY DISPOSE OF ALL CONSTRUCTION MATERIAL, GRADE AREA TO THE ELEVATION OF THE STORM DRAIN INLET TOP, THEN STABILIZE IMMEDIATELY.

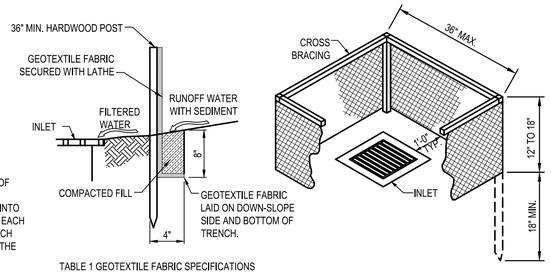

TABLE 1 GEOTEXTILE FABRIC SPECIFICATIONS

PHYSICAL PROPERTIES	WOVEN GEOTEXTILE FABRIC	NON-WOVEN GEOTEXTILE FABRIC
FILTERING EFFICIENCY	85%	85%
TEXTILE STRENGTH AT 20% ELEGATION STANDARD STRENGTH EXTRA STRENGTH	 30 LBS PER LINEAR INCH 50 LBS PER LINEAR INCH	 50 LBS PER LINEAR INCH 70 LBS PER LINEAR INCH
SLURRY FLOW RATE	0.3 GAL/MIN/SQUARE FEET	4.5 GAL/MIN/SQUARE FEET
WATER FLOW RATE	15 GAL/MIN/SQUARE FEET	220 GAL/MIN/SQUARE FEET
UV RESISTANCE (INHIBITORS AND STABILIZERS TO ENSURE SIX MONTH MINIMUM LIFE AT TEMPERATURES OF 0O TO 120O F)	70%	85%

TEMPORARY DROP INLET PROTECTION

N.T.S.

GPD GROUP, INC.
520 South Main Street, Suite 2531
Akron, OH 44311
330.572.2100 Fax: 330.572.2102

THIS SUBMITTAL IS FOR PERMITTING PURPOSES ONLY AND IS PRELIMINARY IN NATURE. AS SUCH, ANY OTHER USE OR RELIANCE IS STRICTLY PROHIBITED.

LEONARDO A. SFERRA
REGISTERED
No. 11600134
STATE OF INDIANA
PROFESSIONAL ENGINEER

02/07/19

CONTRACT DATE:
BUILDING TYPE: ME T40
PLAN VERSION:
BRAND DESIGNER: -
SITE NUMBER: 313327
STORE NUMBER: 2018088.55

TACO BELL
200 PARIS DRIVE
FRANKLIN, IN 44311

T40

SWPP PLAN DETAILS

C-134

BENCHMARKS:

UPDATE ELEVATION TIE-IN OR BASIS OF BEARING.

BENCHMARK #1 - UPDATE.
ELEVATION=UPDATE

BENCHMARK #2 - UPDATE.
ELEVATION=UPDATE

BENCHMARK #3 - UPDATE.
ELEVATION=UPDATE

UPDATE

N

0 5 10 20
1"=10'
Horizontal Scale in Feet

"DON'T DIG BLIND"
"HOLEY MOLEY" SEZ:
Call Monday thru Friday – 7 am. to 6 pm.
1–800–382–5544
TOLL FREE
1–800–428–5200
OUTSIDE INDIANA

NOTICE TO CONTRACTOR

PER INDIANA STATE LAW 15–69–1991, IT IS AGAINST THE LAW TO EXCAVATE WITHOUT NOTIFYING THE UNDERGROUND LOCATION SERVICE TWO (2) WORKING DAYS BEFORE COMMENCING WORK.

LEGEND

(SEE SHEET C-001 FOR GENERAL LEGEND)

ST	PROPOSED STORM SEWER
UD	PROPOSED UNDERDRAIN
SAN	PROPOSED SANITARY SEWER
W	PROPOSED WATER SERVICE
GAS	PROPOSED GAS SERVICE
E	PROPOSED UNDERGROUND ELECTRIC SERVICE
T	PROPOSED UNDERGROUND TELEPHONE & CABLE SERVICE
A #	APPURTENANCES
#	UTILITY CONSTRUCTION KEYNOTE

PLAN KEYNOTES

STORM

100. PROPOSED DOWNSPOUT COLLECTOR LINE @ 2.00% MINIMUM. 16 L.F. TOTAL. PROVIDE WYE CONNECTION INTO ADJACENT STORM LINE AS REQUIRED.
101. PROPOSED FINGER DRAIN, SEE SHEET C-503.
102. PROPOSED STORM CLEANOUT SEE SHEET C-503 AND WYE CONNECTION SHEET C-503. INV=742.10.
103. PROPOSED 68 L.F. OF 6" PVC STORM SEWER BUILDING CONNECTION @ 1.00%
104. PROPOSED 75 L.F. OF 12" RVC STORM SEWER @ 1.00%
105. PROPOSED 69 L.F. OF 12" PVC STORM SEWER @ 1.00%

SANITARY

200. PROPOSED RISER CONNECTION INTO EXISTING 12" MAIN. PROPOSED INV= 736.16, EXISTING 12" INV=734.30.
201. PROPOSED 128 L.F. OF 6" PVC SANITARY SEWER @ 2.00%.
202. PROPOSED SANITARY WYE CONNECTION, SEE SHEET C-503. INV=738.72.
203. PROPOSED 6 L.F. OF 6" PVC SANITARY SEWER @ 2.00%.
204. PROPOSED SANITARY CLEANOUT SEE SHEET C-503 AND WYE CONNECTION SHEET C-503. INV=738.84.
205. PROPOSED 23 L.F. OF 6" PVC SANITARY SEWER @ 2.00%.
206. PROPOSED 2 L.F. OF 6" PVC SANITARY SEWER @ 2.00%.
207. PROPOSED SANITARY CLEANOUT SEE SHEET C-503 AND WYE CONNECTION SHEET C-503. INV=739.59.
208. PROPOSED 8 L.F. OF 6" PVC SANITARY SEWER @ 2.00%.
209. PROPOSED SANITARY CONNECTION INTO BUILDING, INV= 739.75.
210. PROPOSED SANITARY VENT BACK TO BUILDING, SEE ARCHITECTURAL PLANS.
211. PROPOSED 24 L.F. OF 6" PVC SANITARY SEWER @ 2.00%.
212. PROPOSED SANITARY CLEANOUT SEE SHEET C-503 AND WYE CONNECTION SHEET C-503. INV=739.20.
213. PROPOSED 3 L.F. OF 6" PVC SANITARY SEWER @ 2.00%.
214. PROPOSED SANITARY CONNECTION INTO BUILDING, INV= 739.26.

WATER

300. PROPOSED WATER CONNECTION. COORDINATE WITH PLUMBING PLANS.
301. PROPOSED 119 L.F. 1-1/2" COPPER TYPE "K" WATER SERVICE LINE.
302. PROPOSED WATER METER AND BACKFLOW PREVENTOR IN VAULT PER UTILITY COMPANY STANDARDS AND SPECIFICATIONS. REFER TO DETAIL SHEET C-503.
303. PROPOSED IRRIGATION SPLIT AND VALVE PER UTILITY COMPANY STANDARDS AND SPECIFICATIONS.
304. PROPOSED IRRIGATION METER PER UTILITY COMPANY STANDARDS AND SPECIFICATIONS. CONTRACTOR SHALL COORDINATE WITH UTILITY COMPANY.
305. PROPOSED IRRIGATION CONTINUATION.
306. PROPOSED CONNECTION TO WATER SERVICE LATERAL COORDINATE WITH DEVELOPERS PLANS FOR EXACT LOCATION.
307. PROPOSED SHUT OFF VALVES PER UTILITY COMPANY STANDARDS AND SPECIFICATIONS.

ELECTRIC AND COMMUNICATIONS

400. PROPOSED ELECTRIC METER PER ELECTRIC COMPANY SPECIFICATIONS. SEE BUILDING DRAWINGS FOR EXACT LOCATION. ELECTRIC SERVICE LINE TO BE COORDINATED WITH THE ELECTRIC COMPANY.
401. PROPOSED ELECTRIC SERVICE CONNECTION TO BE COORDINATED WITH THE UTILITY COMPANY.
402. PROPOSED LIGHT POLE, SEE SHEET C-502. SEE ELECTRICAL DRAWINGS FOR SPECIFICATIONS.
403. PROPOSED ELECTRICAL TRANSFORMER BY OTHERS PER ELECTRICAL COMPANY SPECIFICATIONS. G.C. TO VERIFY EXACT LOCATION AND SIZE WITH UTILITY ENGINEER.
404. PROPOSED TELECOMMUNICATIONS SERVICE CONNECTION TO BE COORDINATED WITH THE UTILITY COMPANY. REFER TO DEVELOPERS PLANS FOR CONNECTION TO EXISTING.

GAS

500. PROPOSED GAS METER PER GAS COMPANY SPECIFICATIONS. SEE BUILDING DRAWINGS FOR EXACT LOCATION. GAS SERVICE LINE TO BE COORDINATED WITH THE GAS COMPANY.
501. PROPOSED 141 L.F. GAS SERVICE CONNECTION TO BE COORDINATED WITH THE GAS COMPANY. REFER TO DEVELOPERS PLANS FOR CONNECTION TO EXISTING.

UTILITY CROSSINGS

GENERAL CROSSING NOTES: CONTRACTOR SHALL COORDINATE ALL CROSSINGS WITH THE UTILITY COMPANY. PRESSURIZED AND SECONDARY UTILITIES SHALL DEFLECT TO MAINTAIN 18" CLEAR AT SANITARY OR STORM SEWER CROSSINGS.

600. PROPOSED UTILITY CROSSING: 6" PVC SANITARY INV=737.06; 12" HDPE STORM INV=740.42

EXISTING STRUCTURES

STRCT. ID	STRUCTURE DETAILS
SAN 207	EXISTING SANITARY SEWER MANHOLE RIM=~~744.10~~ PROP RIM = 744.73 INV. 12" (N)=735.72 INV. 12" (W)=734.31 INV. 12" (S)=735.65

PROPOSED STRUCTURES

STRCT. ID	STRUCTURE DETAILS
CB A	CATCH BASIN BY DEVELOPER GRATE=744.00 INV. 12" (E&W)=740.17 INV. 4" FINGER DRAIN (N,S&W) = 742.34
CI B	PROPOSED CURB INLET (SEE DETAIL C1, SHEET C-503) GRATE=744.50 INV. 6" (N)=741.42 INV. 12" (E)=740.92 INV. 4" FINGER DRAIN (SE,NW&NE) = 742.84
CI C	PROPOSED CURB INLET (SEE DETAIL C1, SHEET C-503) GRATE=744.41 INV. 12" (E)=740.86 INV. 4" FINGER DRAIN (N,S&W) = 742.75
CB D	CATCH BASIN BY DEVELOPER GRATE=744.00 INV. 12" (E&W)=740.17 INV. 4" FINGER DRAIN (N,S&W) = 742.34
GI 100	PROPOSED GREASE INTERCEPTOR (SEE DETAIL C3, SHEET C-503) RIM=745.59 INV. 6" (W)=739.55 INV. 6" (E)=739.30

GENERAL SHEET NOTES

1. REFER TO DEVELOPERS PLANS FOR CONTINUATION OF PROPOSED UTILITIES AND CONNECTIONS TO EXISTING.

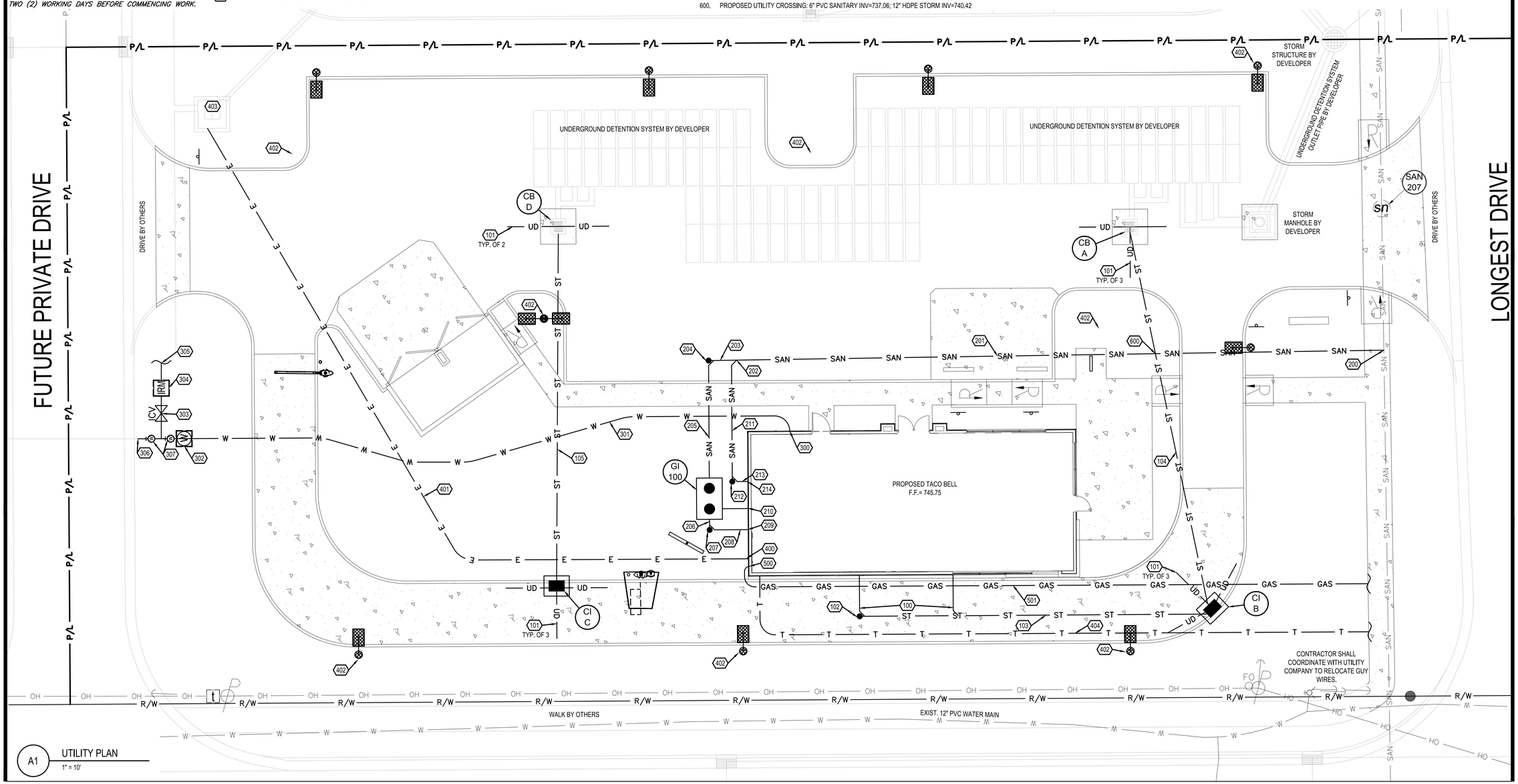

A1 UTILITY PLAN
1" = 10'

GPD GROUP, INC.
520 South Main Street, Suite 2531
Akron, OH 44311
330.572.2100 Fax: 330.572.2102

THIS SUBMITTAL IS FOR PERMITTING PURPOSES ONLY AND IS PRELIMINARY IN NATURE. AS SUCH, ANY OTHER USE OR RELIANCE IS STRICTLY PROHIBITED.

LEONARDO A. SIERRA
REGISTERED
No. 11600134
STATE OF INDIANA
PROFESSIONAL ENGINEER
02/07/19

CONTRACT DATE:
BUILDING TYPE: ME T40
PLAN VERSION:
BRAND DESIGNER: -
SITE NUMBER: 313327
STORE NUMBER: 2018088.55

TACO BELL

200 PARIS DRIVE
FRANKLIN, IN 44311

TACO BELL
T40

UTILITY PLAN

C-141

"DON'T DIG BLIND"

"HOLEY MOLEY" SEZ:

Call Monday thru Friday – 7 am. to 6 pm.

1–800–382–5544

TOLL FREE

1–800–428–5200

OUTSIDE INDIANA

NOTICE TO CONTRACTOR

PER INDIANA STATE LAW 1S–69–1991, IT IS AGAINST THE LAW TO EXCAVATE WITHOUT NOTIFYING THE UNDERGROUND LOCATION SERVICE TWO (2) WORKING DAYS BEFORE COMMENCING WORK.

BENCHMARKS:

UPDATE ELEVATION TIE-IN OR BASIS OF BEARING.

BENCHMARK #1 - UPDATE.
ELEVATION=UPDATE

BENCHMARK #2 - UPDATE.
ELEVATION=UPDATE

BENCHMARK #3 - UPDATE.
ELEVATION=UPDATE

UPDATE

DRAINAGE ANALYSIS

DETENTION AND WATER QUALITY - THE DEVELOPER WILL PROVIDE STORMWATER DETENTION AND WATER QUALITY TREATMENT TO COVER THE PROPOSED DEVELOPMENT. THE DEVELOPER'S PROPOSED STORMWATER MANAGEMENT IMPLEMENTATIONS WILL MEET THE REQUIREMENTS FOR THE LOCAL MUNICIPALITY'S STORMWATER REQUIREMENTS. AS STORMWATER MANAGEMENT BEING PROVIDED VIA THE DEVELOPER, ON-SITE STORMWATER QUANTITY AND QUALITY PRACTICES WILL BE PER DEVELOPERS PLANS. REFER TO DEVELOPERS PLANS FOR ADDITIONAL INFORMATION.

STORM SEWERS - STORM SEWERS ARE SIZED TO HAVE THE HGL WITHIN THE STRUCTURE DURING THE 100-YEAR STORM EVENT. RAINFALL PRECIPITATION INTENSITIES WERE TAKEN FROM NOAA ATLAS 14. INLET TIME OF CONCENTRATION WAS TAKEN TO BE THE 10 MINUTE MINIMUM.

NOTE:
A RUN-OFF COEFFICIENT OF 0.95 FOR IMPERVIOUS AREAS AND 0.40 FOR PERVIOUS AREAS WAS USED FOR ALL COMPUTATIONS.

LEGEND

DRAINAGE AREA 1
PERVIOUS AREA = 0.06 ACRES
IMPERVIOUS AREA = 0.04 ACRES
TOTAL AREA = 0.10 ACRES
WEIGHTED "C" VALUE = 0.62

DRAINAGE AREA 2
PERVIOUS AREA = 0.04 ACRES
IMPERVIOUS AREA = 0.08 ACRES
TOTAL AREA = 0.12 ACRES
WEIGHTED "C" VALUE = 0.77

N

0 10 20 40

1"=20'
Horizontal Scale in Feet

Storm Sewer Tabulation

Page 1

Station		Len	Drng Area		Rnoff coeff	Area x C		Tc		Rain (I)	Total flow	Cap full	Vel	Pipe		Invert Elev		HGL Elev		Grnd / Rim Elev		Line ID
Line	To Line	(ft)	Incr (ac)	Total (ac)	(C)	Incr	Total	Inlet (min)	Syst (min)	(in/hr)	(cfs)	(cfs)	(ft/s)	Size (in)	Slope (%)	Dn (ft)	Up (ft)	Dn (ft)	Up (ft)	Dn (ft)	Up (ft)	
1	End	75.000	0.12	0.12	0.77	0.09	0.09	10.0	10.0	7.7	0.71	3.56	3.22	12	1.00	740.17	740.92	740.47	741.27	744.00	744.50	CI B TO CB A
2	End	69.000	0.10	0.10	0.62	0.06	0.06	10.0	10.0	7.7	0.48	3.56	2.85	12	1.00	740.17	740.86	740.42	741.15	744.00	744.41	CI C TO CB D

Project File: swm.stm | Number of lines: 2 | Run Date: 1/18/2019

NOTES:Intensity = 47.72 / (Inlet time + 5.70) ^ 0.66; Return period =Yrs. 100 ; c = cir e = ellip b = box

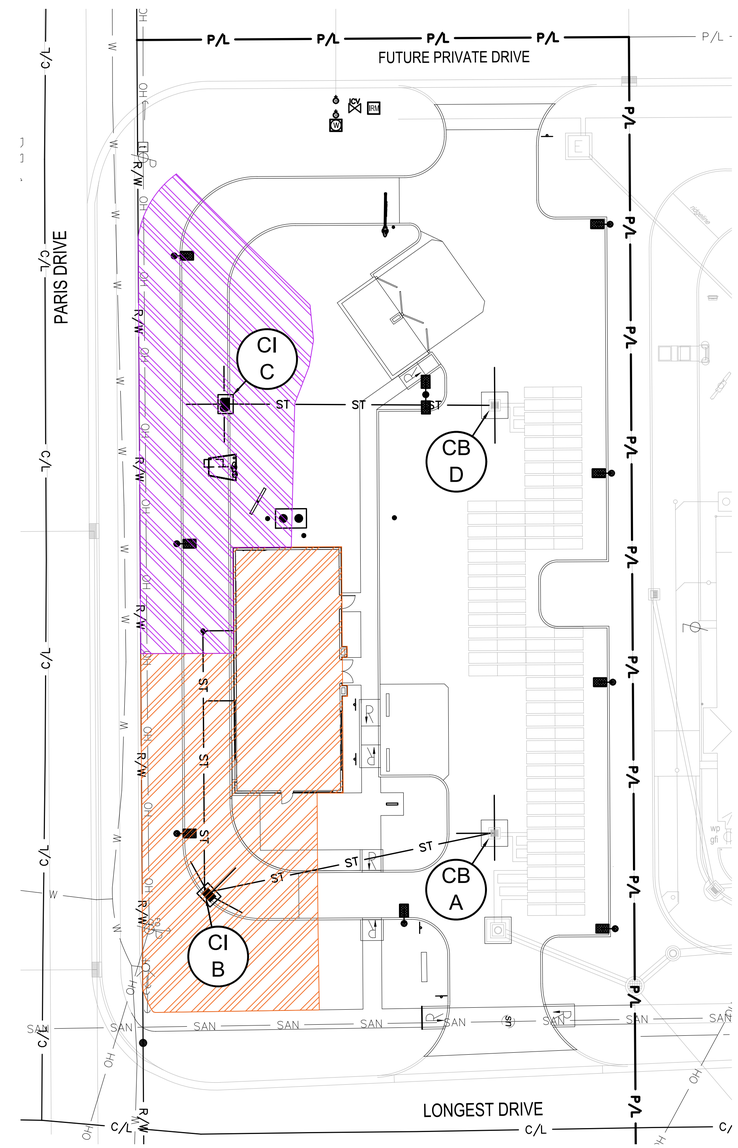

A1 STORM SEWER SIZING DRAINAGE MAP
1" = 20'

GPD GROUP, INC.
520 South Main Street, Suite 2531
Akron, OH 44311
330.572.2100 Fax: 330.572.2102

THIS SUBMITTAL IS FOR PERMITTING PURPOSES ONLY AND IS PRELIMINARY IN NATURE. AS SUCH, ANY OTHER USE OR RELIANCE IS STRICTLY PROHIBITED.

LEONARDO A. SFERRA
REGISTERED
No. 11600134
STATE OF INDIANA
PROFESSIONAL ENGINEER

02/07/19

CONTRACT DATE:
BUILDING TYPE: ME T40
PLAN VERSION:
BRAND DESIGNER: -
SITE NUMBER: 313327
STORE NUMBER: 2018088.55

TACO BELL

200 PARIS DRIVE
FRANKLIN, IN 44311

T40

STORM SEWER SIZING DRAINAGE MAP

C-142

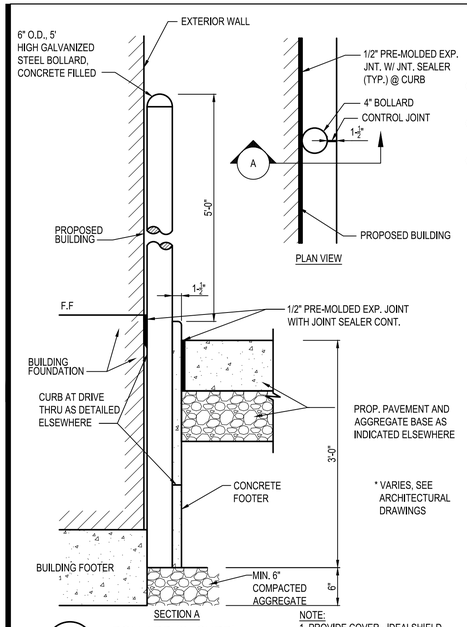

NOTE:
1. PROVIDE COVER - IDEALSHIELD. COLOR TO MATCH P7 (GRAY).

C1 BOLLARD (IN CURB)
N.T.S.

KEYED NOTES

1. PAINT BACKGROUND BENJAMIN MOORE M58 SAFETY & ZONE MARKING LATEX M58-30 - BLUE
2. PAINT SYMBOL BENJAMIN MOORE M58 SAFETY & ZONE MARKING LATEX M58-01 - WHITE 4" WIDTH
3. BOTTOM EDGE OF SYMBOL BOX SHALL MATCH END OF STALL STRIPE AT DRIVE AISLE END OF STALL.

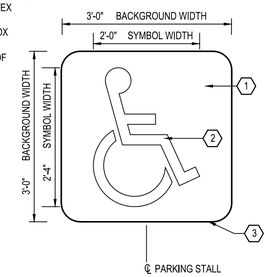

D2 ADA PAVEMENT SYMBOL
N.T.S.

PRODUCT: DERO HOOP RACK HEAVY DUTY DERO BIKE RACKS (OR APPROVED EQUAL)
WWW.DERO.COM
1-800-298-4915

CAPACITY: 2 BIKES

MATERIALS: 2" SCHEDULE 40 PIPE (2.375" OD)

CONTRACTOR SHALL COORDINATE FINISH AND PREFERENCE INSTALLATION METHOD WITH CONSTRUCTION MANAGER.

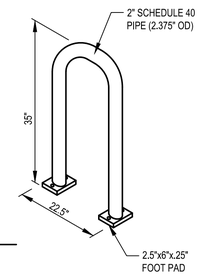

C2 BIKE RACK DETAIL
N.T.S.

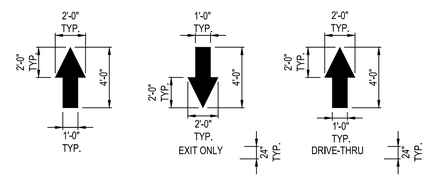

NOTES:

ALL PAVEMENT MARKINGS TO BE WHITE PAVEMENT PAINT, UNLESS STATED OTHERWISE.

MARKING (STRIPING) PAINT FOR PARKING SPACES, TRAFFIC ARROWS, ADA PARKING AND SYMBOLS, ETC., PER LOCAL REQUIREMENTS AND AS FOLLOWS:

EXISTING SURFACES WITHOUT ANY SEAL COATING: OIL BASE (ALKYD RESIN TYPE TO MEET FEDERAL SPECIFICATION TTP-1952.

NEW OR EXISTING SURFACES WITH A TOP COATING OR SEAL COATING (USUALLY WATER BASE FAST DRYING 100% ACRYLIC TYPE): WATER BASE TYPE TO MEET FEDERAL SPECIFICATION TTP-01952. FOR COLD WEATHER APPLICATION PAINT PRODUCT SHALL BE IN ACCORDANCE WITH ASTM-D2369, D1394, D3723, D1475, D562, AND D711

PROVIDE A NON-SLIP AGGREGATE ADDITIVE TO MARKING PAINT USED AT ADA ACCESS RAMPS.

APPLY 2 COATS WITH STRAIGHT EDGES, YELLOW ON CONCRETE/WHITE ON ASPHALT EXCEPT WHEN MATCHING ADJACENT OR EXISTING COLOR WHEN THE PAVING IS AN EXPANSION OR SEGMENT OF A LARGER LOT.

C3 PAVEMENT MARKINGS & NOTES
N.T.S.

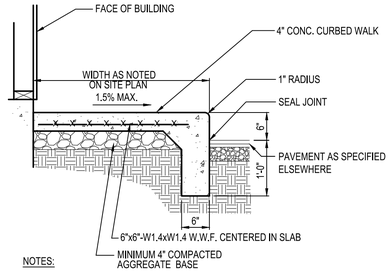

NOTES:

1. CONTRACTOR SHALL INSTALL 1/2" PRE-FORMED EXPANSION JOINT MATERIAL AND JOINT SEALER WHERE PAVEMENT ABUTS BUILDING.

D4 P.C.C CURBED WALK
N.T.S.

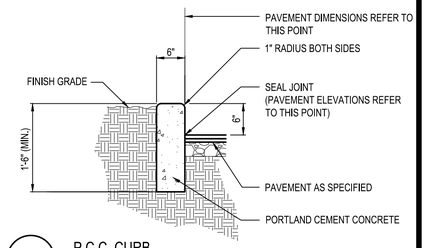

D5 P.C.C. CURB
N.T.S.

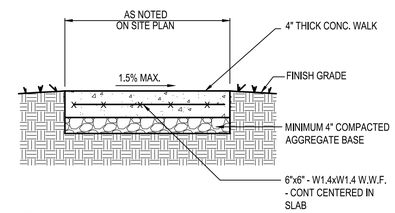

NOTES:

1. CONTRACTOR SHALL INSTALL 1/2" PRE-FORMED EXPANSION JOINT MATERIAL AND JOINT SEALER WHERE PAVEMENT ABUTS BUILDING.

C4 P.C.C. WALK
N.T.S.

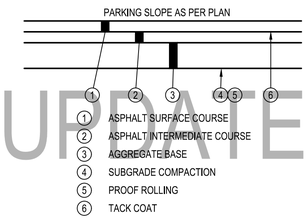

UPDATE

NOTES:

1. APPLY LIQUID ASPHALT AT ALL JOINTS BETWEEN CONCRETE AND ASPHALT AND WHERE PROPOSED ASPHALT MEETS EXISTING ASPHALT INCLUDING SAW CUT JOINTS.
2. SEE SITE PLAN FOR PAVEMENT THICKNESSES.

C5 TYPICAL PAVEMENT SECTION
N.T.S.

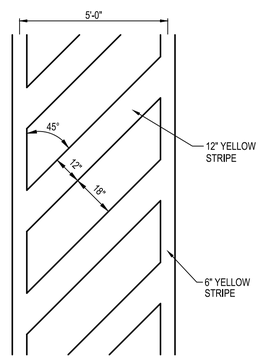

B3 CROSSWALK
N.T.S.

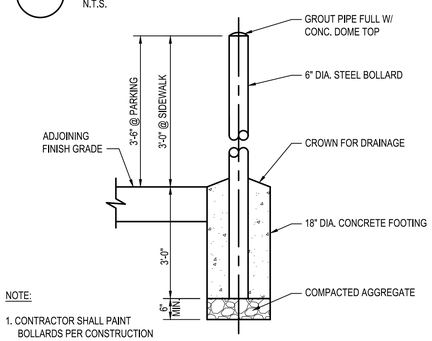

NOTE:

1. CONTRACTOR SHALL PAINT BOLLARDS PER CONSTRUCTION MANAGER SPECIFICATIONS.

B4 BOLLARD
N.T.S.

KEYED NOTES

1. FACE OF BUILDING
2. CONCRETE CURB
3. 1" RADIUS
4. PAVEMENT AS SPECIFIED
5. 1/2" PRE MOLDED EXP. JNT. CUT BACK AND PROVIDE SEALANT, TYPICAL, AT ALL JOINTS WITH FILLER.
6. SEAL JOINT
7. 15LB BOND BREAK MATERIAL BELOW EXP. JNT. MATERIAL

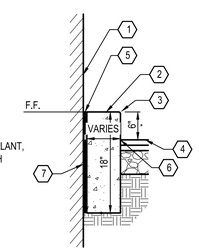

* SEE GRADING PLAN FOR ANY VARIATIONS TO EXPOSED CURB HEIGHT.

B5 CURB AT DRIVE THRU
N.T.S.

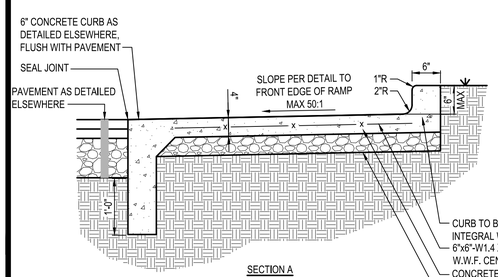

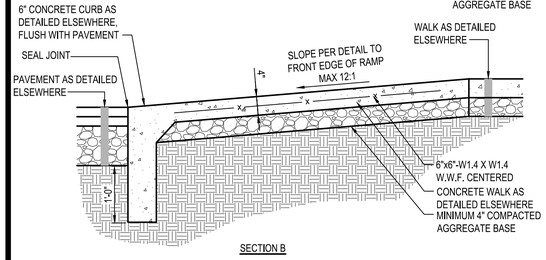

A1 ADA ACCESSIBLE RAMP
N.T.S.

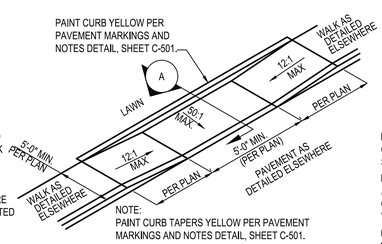

NOTE:
PAINT CURB TAPERS YELLOW PER PAVEMENT MARKINGS AND NOTES DETAIL, SHEET C-501.

PARALLEL RAMP
TYPE 1

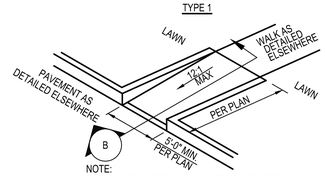

NOTE:
PAINT CURB TAPERS YELLOW PER PAVEMENT MARKINGS AND NOTES DETAIL, SHEET C-501.

PERPENDICULAR RAMP
TYPE 2

A1 ADA ACCESSIBLE RAMP
N.T.S.

PROVIDE USDOT #R7-8 SIGN CONTAINING INTERNATIONAL SYMBOL OF ACCESSIBILITY.

PROVIDE SIGN INDICATING FINE, AMOUNT AND STYLE AS PER LOCAL ORDINANCES, MIN 6" HT, SAME WIDTH AS #R7-8 SIGN

USDOT #R7-8A SIGN INDICATING "VAN ACCESSIBLE", SAME WIDTH AS #R7-8 SIGN

2" X 2" GALVANIZED STEEL TUBE EXTENDED INTO CONCRETE FILLED BOLLARD.

6" DIAMETER BOLLARD (PAINTED BLUE OR PER SITE OWNER REQUIREMENTS) BOLLARD PIPE TO BE FLUSH AGAINST BACK FACE OF CURB

FINISHED SURFACE PAVEMENT AS DETAILED ELSEWHERE

SEALED EXPANSION JOINT AROUND BOLLARD PIPE

18" DIA. CONCRETE FOUNDATION AROUND PIPE COLUMN 6" BELOW FROST LINE (3 FT. MIN. BELOW FIN. GRADE).

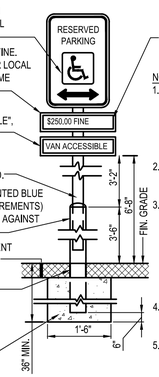

BOLT SIGNS TO GALVANIZED STEEL TUBE COLUMN

NOTES:

1. CONTRACTOR SHALL VERIFY SIGN WITH LOCAL AND ADA REQUIREMENTS AND SPECIFICATIONS BEFORE INSTALLATION. LOCAL JURISDICTION SIGN REQUIREMENTS SHALL TAKE PRECEDENCE OVER THIS DETAIL.
2. SIGNS SHALL BE LOCATED SO THAT THEY CANNOT BE OBSCURED BY A VEHICLE PARKED IN THE SPACE. BOLLARD TO BE DELETED IF SIGN POST IS OUT OF VEHICULAR PATH OR PARKING SPACE. WHEN NOT USING BOLLARD FOUNDATION THE SIGN POST SHALL BE EMBEDDED 3'-6" IN A 12" DIA. CONCRETE FOOTING 4'-0" DEEP (0.12 CU. YDS. OF CONCRETE REQUIRED).
3. SIGN TO BE PROVIDED AT ALL ACCESSIBLE PARKING SPACES AS PER ADA REGULATIONS.
4. IF SIGN IS MOUNTED TO BUILDING, THE BOTTOM OF THE VAN ACCESSIBLE SIGN SHALL BE 5'-0" FROM THE FINISH GRADE.
5.

A3 ADA PARKING SIGN
N.T.S.

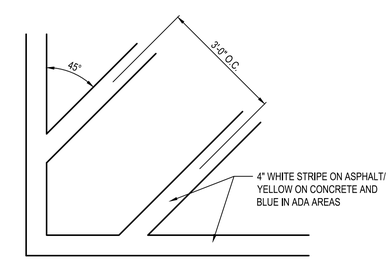

A4 PAINTED TRANSVERSE STRIPING
N.T.S.

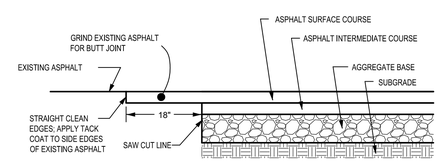

A5 BUTT JOINT
N.T.S.

GPD GROUP, INC.
520 South Main Street, Suite 2531
Akron, OH 44311
330.572.2100 Fax: 330.572.2102

THIS SUBMITTAL IS FOR PERMITTING PURPOSES ONLY AND IS PRELIMINARY IN NATURE. AS SUCH, ANY OTHER USE OR RELIANCE IS STRICTLY PROHIBITED.

LEONARDO A. SFERRA REGISTERED No. 11600134 STATE OF INDIANA PROFESSIONAL ENGINEER

02/07/19

CONTRACT DATE:
BUILDING TYPE: ME T40
PLAN VERSION:
BRAND DESIGNER: -
SITE NUMBER: 313327
STORE NUMBER: 2018088.55

TACO BELL
200 PARIS DRIVE
FRANKLIN, IN 44311

TACO BELL
T40

DETAILS

C-501

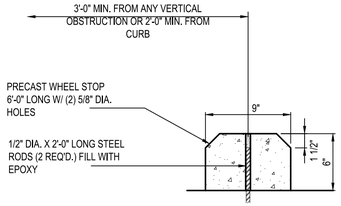

NOTE:
SEE SITE PLAN FOR LOCATION AND QUANTITY OF WHEELSTOPS.

D1 P.C.C. WHEELSTOP
N.T.S.

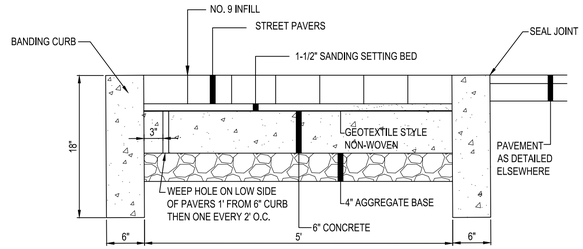

NOTES:
1. EXISTING BRICK PAVERS TO BE RESET

D2 SIDEWALK PAVER SECTION
N.T.S.

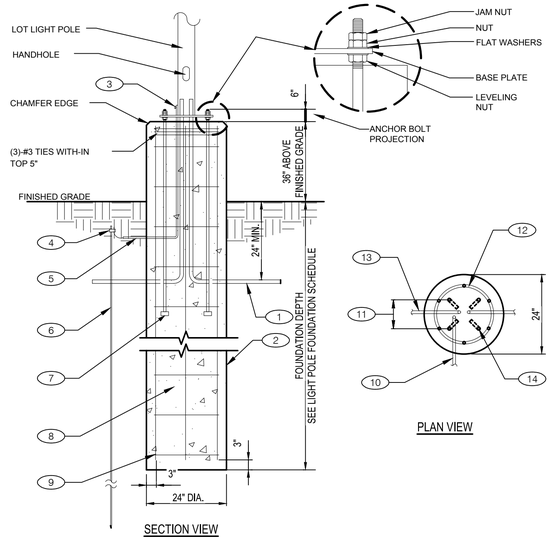

SECTION VIEW

PLAN VIEW

NOTE:
BOLT PATTERN PROVIDED AS EXAMPLE - OBTAIN ANCHOR BOLT TEMPLATE FROM SUPPLIER

CONDUIT SCHEDULE		
DEVICE	POWER	DATA
DIRECTIONAL	(1) 3/4"	-
OCB	(1) 3/4"	(3) 1"
MENU BOARD	(1) 3/4"	

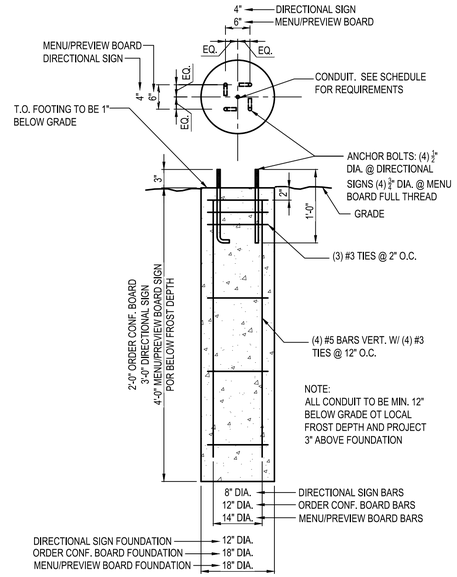

C5 MENU BOARD FOOTING DETAIL
N.T.S.

STANDARD R1-1 SIGN

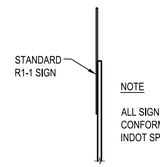

NOTE
ALL SIGNS NOTED SHALL CONFORM TO THE LATEST INDOT SPECIFICATIONS.

C2 STOP SIGN
N.T.S.

KEY NOTES
1. 1" CONDUIT OR AS NOTED. EXTEND 3/4" MAX. ABOVE FOUNDATION. (INSTALL ON MIN. 6" SAND BED WITH MIN. 6" SAND COVER BEFORE BACKFILL. CONDUIT SHALL BE FULL WEIGHT SCHEDULE 40 PVC)
2. POURED CONCRETE BASE BY G.C. (24" DIA.) (3,000 PSI, CLASS "C" CONCRETE)
3. PROVIDE GROUND LUG IN BASE BOLTED TO BASE PLATE. GROUND SHALL BE MIN. #6 BARE WIRE.
4. T & B #5 GND. CLAMP.
5. 1/2" EMT OR PVC CONDUIT FOR GROUND WIRE
6. GROUNDING ROD.
7. (4) 4'-0" LONG HEADED ANCHOR RODS. COORDINATE ANCHOR ROD DIAMETER W/ POLE SUPPLIER. FURNISHED BY LOT LIGHTING SUPPLIER & INSTALLED BY G.C.
8. #3 TIES SPACED @ 12" O.C.
9. (9)-#5 VERTICAL REBARS
10. CONDUIT STUB OUT FOR GROUND WIRE CONNECTION
11. BOLT PATERN BY LOT LIGHTING SUPPLIER
12. REBAR CAGE
13. CONDUIT STUB OUT
14. ANCHOR BOLTS

LIGHT POLE FOUNDATION SCHEDULE	
BASIC WIND SPEED (MPH) (ASCE 7-10)	FOUNDATION DEPTH
90 - 100	6'-0"
101 - 120	7'-0"
121 - 140	8'-0"

NOTES
- WIND LOADS ARE BASED ON EXPOSURE C.
- MAX. POLE HEIGHT = 25' MAX (POLE LENGTH) + 3' (FOUNDATION HEIGHT ABOVE GRADE) = 28' MAX.
- FOUNDATION DESIGN IS BASED ON A MAX. LUMINARY EFFECTIVE PROJECTED AREA (EPA) OF 4.0 S.F.
- LIGHT POLES SHALL MEEET FOR ASCE 7-10 ASD DESIGN WIND SPEEDS PROVIDED ABOVE.
- ALL REINFORCING STEEL SHALL DEFORMED BARS CONFORMING TO ASTM A-615 GRADE 60.
- CONCRETE ABOVE FINISH GRADE TO BE SMOOTH WITH RUBBED FINISH.
- MINIMUM REQUIRED SOIL PARAMETERS:
- ALLOWABLE LATERAL PASSIVE PRESSURE =250 PLF/FT
- 6" MAX. DEPTH OF DISTURBED TOP SOIL.
- WATER TABLE SHALL BE LOCATED BELOW THE BOTTOM OF FOUNDATION.

B4 LIGHT POLE FOUNDATION DETAIL
N.T.S.

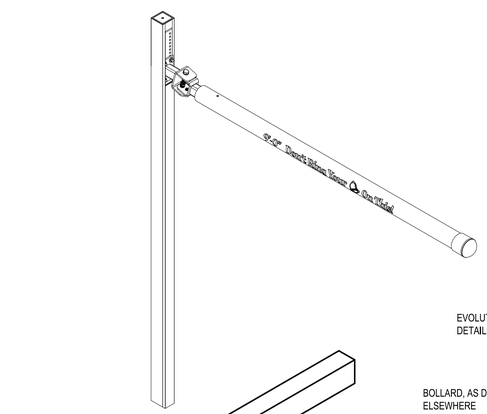

RIGHT ISO VIEW

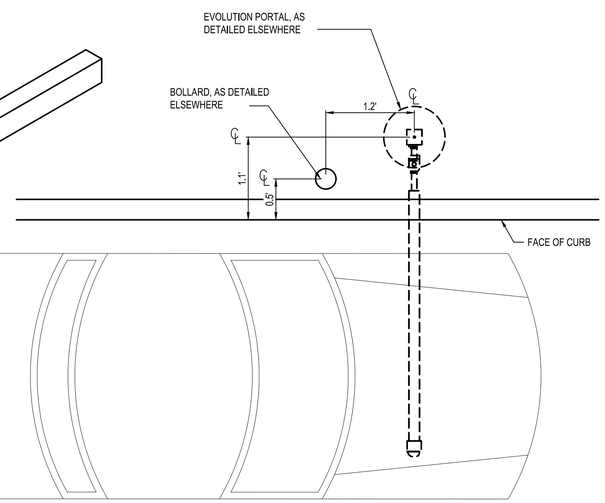

A1 PORTAL PLACEMENT DETAIL
N.T.S.

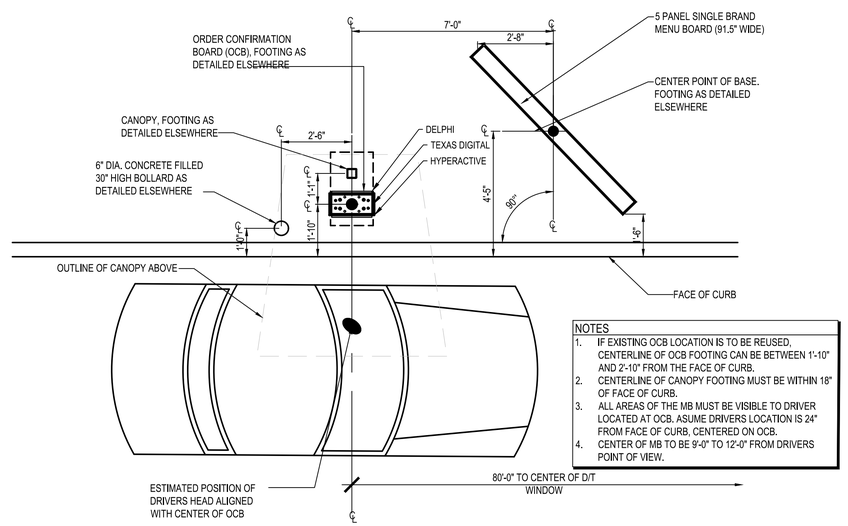

NOTES
1. IF EXISTING OCB LOCATION IS TO BE REUSED, CENTERLINE OF OCB FOOTING CAN BE BETWEEN 1'-10" AND 2'-10" FROM THE FACE OF CURB.
2. CENTERLINE OF CANOPY FOOTING MUST BE WITHIN 18" OF FACE OF CURB.
3. ALL AREAS OF THE MB MUST BE VISIBLE TO DRIVER LOCATED AT OCB. ASUME DRIVERS LOCATION IS 24" FROM FACE OF CURB, CENTERED ON OCB.
4. CENTER OF MB TO BE 9'-0" TO 12'-0" FROM DRIVERS POINT OF VIEW.

A3 ENLARGED MENU BOARD DETAIL @ STRAIGHT CURB
N.T.S.

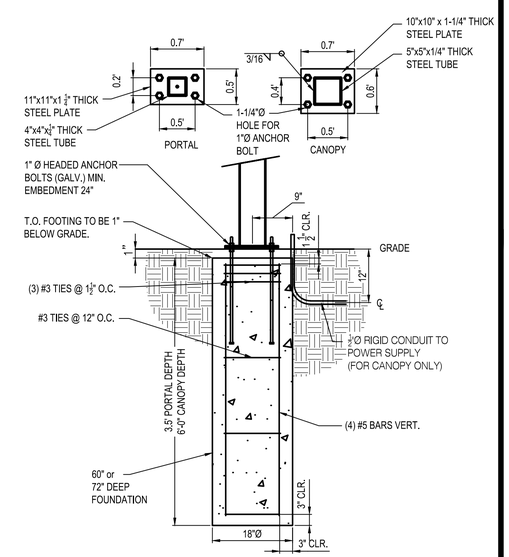

A5 EVOLUTION / CANOPY FOUNDATION DETAIL
N.T.S.

GPD GROUP, INC.
520 South Main Street, Suite 2531
Akron, OH 44311
330.572.2100 Fax: 330.572.2102

THIS SUBMITTAL IS FOR PERMITTING PURPOSES ONLY AND IS PRELIMINARY IN NATURE. AS SUCH, ANY OTHER USE OR RELIANCE IS STRICTLY PROHIBITED.

LEONARDO A. SFERRA
REGISTERED
No. 11600134
STATE OF INDIANA
PROFESSIONAL ENGINEER

02/07/19

CONTRACT DATE:	
BUILDING TYPE:	ME T40
PLAN VERSION:	
BRAND DESIGNER:	-
SITE NUMBER:	313327
STORE NUMBER:	2018088.55

TACO BELL

200 PARIS DRIVE
FRANKLIN, IN 44311

TACO BELL
T40

DETAILS

C-502

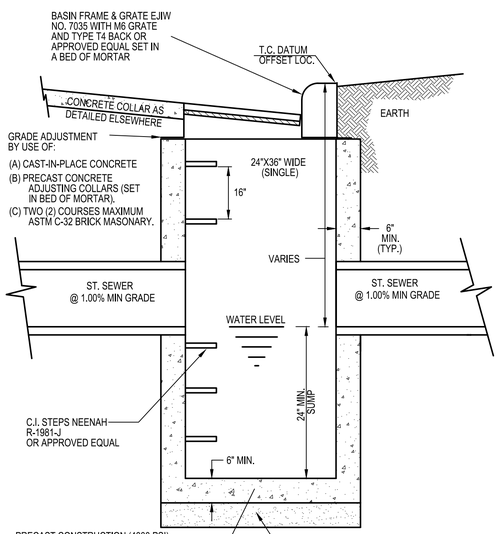

C1 CURB INLET
N.T.S.

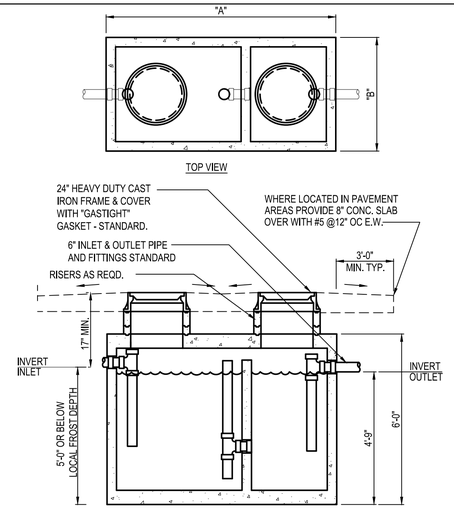

G.T. SIZE	DIM. "A"	DIM. "B"
500 GALLON	6'-2"	4'-2"
750 GALLON	8'-1"	4'-0"
1000 GALLON	8'-2"	5'-1"
1250 GALLON	8'-6"	5'-9"
1500 GALLON	*	*

* PER MANUFACTURER SPECIFICATIONS.

GC SHALL INSTALL GREASE INTERCEPTOR, (G.I.) AS APPROVED BY LOCAL WASTEWATER JURISDICTION INSTALLATION SHALL INCLUDE VENT, SAMPLING PORT/ MANHOLE, REINF. CONCRETE TRAFFIC LID, ETC. AS REQUIRED PER WASTEWATER DEPARTMENT STANDARDS. G.I. SHALL BE DESIGNED FOR H20 VEHICLE LOADS.

C3 EXTERIOR GREASE INTERCEPTOR
N.T.S.

KEYED NOTES

1. CONCRETE, MATCH PAVEMENT SPEC.
2. 6" (MIN.) AGGREGATE BASE
3. 6" DIA. CLEAN-OUT PIPE
4. CAP AND SEAL CONDUIT
5. THREADED CLEAN-OUT CAP
6. CAST-IRON MONUMENT BOX, EJIW 1565 OR APPROVED EQUAL.
7. 45° BEND
8. WYE
9. SEWER

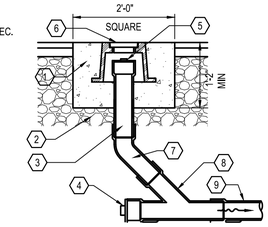

C5 CLEAN OUT (PAVEMENT AREA)
N.T.S.

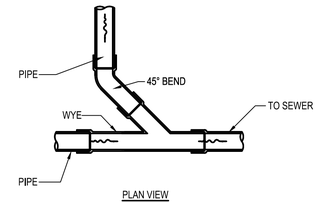

D4 WYE CONNECTION
N.T.S.

KEYED NOTES

1. 6" DIA. CLEAN-OUT PIPE
2. CAP AND SEAL CONDUIT
3. THREADED CLEAN-OUT CAP
4. 45° BEND
5. WYE
6. SEWER

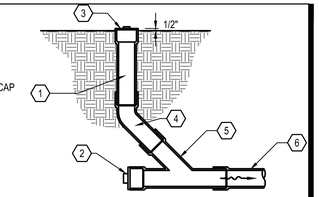

D5 CLEAN OUT (LAWN AREA)
N.T.S.

8" THICK, WITH 1/2" DIA. REINFORCING BARS AT 12" EACH WAY, PLACED AT MID-DEPTH IN SLAB (USE BLOCKOUT IN PAVED AREAS ONLY)

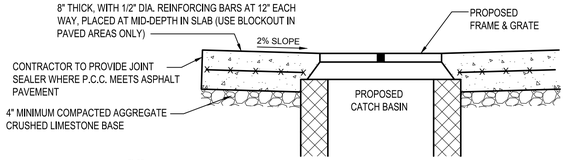

NOTES:

1. CONTRACTOR SHALL INSTALL 1/2" PRE-FORMED EXPANSION JOINT MATERIAL AND JOINT SEALER WHERE PAVEMENT ABUTS CURB.

B1 CONCRETE COLLAR
N.T.S.

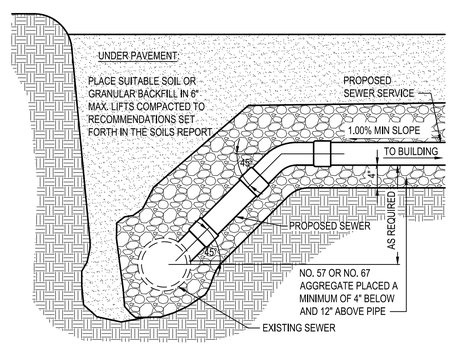

B3 SEWER RISER (TAP)
N.T.S.

KEYED NOTES

1. EXCAVATE WIDTH OF TRENCH AS NEEDED
2. PLACE SUITABLE SOIL OR GRANULAR BACKFILL IN 6" MAX. LIFTS. SUITABLE SOIL SHALL BE COMPACTED TO 90% MIN. (98% MIN. UNDER PAVEMENT) DRY DENSITY, PER ASTM D698. GRANULAR BACKFILL SHALL BE COMPACTED TO 75% (80% UNDER PAVEMENT) RELATIVE DENSITY, PER ASTM 4353. GRANULAR BACKFILL REQUIRED UNDER PAVEMENT.
3. PROPOSED STORM OR SANITARY SEWER
4. TOPSOIL, SEED?SOD, AND MULCHING OR PAVEMENT AS DETAILED ELSEWHERE.
5. NO. 57 OR NO. 67 AGGREGATE PLACED A MINIMUM OF 12" ABOVE THE TOP OF THE PIPE
6. NO. 57 OR NO. 67 AGGREGATE PLACED A MINIMUM OF 6" BELOW THE BOTTOM OF THE PIPE

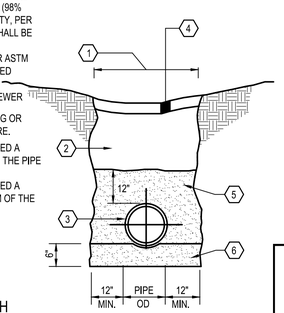

B4 SEWER TRENCH
N.T.S.

KEYED NOTES

1. TOPSOIL & SEED, OR PAVEMENT AS DETAILED ELSEWHERE.
2. UNDISTURBED EARTH
3. PLACE ODOT 304 GRANULAR BACKFILL IN 6" MAX. LIFTS COMPACTED TO 98% MAX. DRY DENSITY PER D4353.
4. SAND ENVELOPE TO EXTEND 8" ABOVE AND 8" BELOW THE PIPE.
5. EXCAVATE WIDTH OF TRENCH AS NEEDED.
6. CEMENT LINED, TYPE K WATER SERVICE LINE.

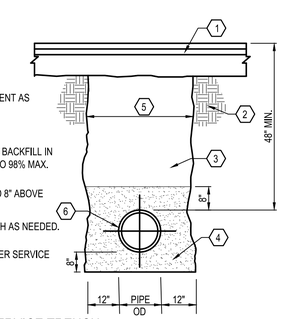

B5 WATER SERVICE TRENCH
N.T.S.

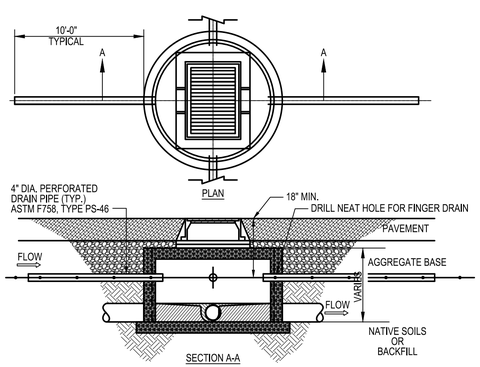

A1 FINGER DRAIN DETAIL
N.T.S.

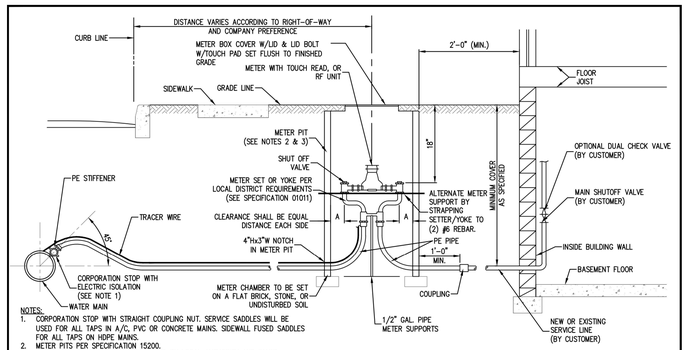

NOTES:

1. CORPORATION STOP WITH STRAIGHT COUPLING NUT. SERVICE SADDLES WILL BE USED FOR ALL TAPS IN A/C, PVC OR CONCRETE MAINS. SIDEWALL FUSED SADDLES FOR ALL TAPS ON HDPE MAINS.
2. METER PITS PER SPECIFICATION 15200.
3. METER PIT LOCATION TO BE DETERMINED BY LOCAL AUTHORITY AND INAWC.
4. SERVICE LINE AND METER PIT OWNERSHIP VARIES BY LOCAL TARIFF.
5. CONNECTIONS BETWEEN PIPE LENGTHS SHALL BE COMPRESSION OR FLARE AND MAY DEPEND ON LOCAL PLUMBING REQUIREMENT.

SINGLE WATER SERVICE CONNECTION
N.T.S.

INDIANA AMERICAN WATER
ENGINEERING DEPARTMENT
153 N. EMERSON AVENUE
GREENWOOD, INDIANA 46143

STANDARD DETAIL

SINGLE WATER SERVICE

DATE: JANUARY, 2018	DRAWN BY: S. FORD
LATEST REV: JANUARY, 2018	APP'D BY: E.N.

GPD GROUP, INC.
520 South Main Street, Suite 2531
Akron, OH 44311
330.572.2100 Fax: 330.572.2102

THIS SUBMITTAL IS FOR PERMITTING PURPOSES ONLY AND IS PRELIMINARY IN NATURE. AS SUCH, ANY OTHER USE OR RELIANCE IS STRICTLY PROHIBITED.

LEONARDO A. SERRA REGISTERED No. 11600134 STATE OF INDIANA PROFESSIONAL ENGINEER

02/07/19

CONTRACT DATE:
BUILDING TYPE: ME T40
PLAN VERSION:
BRAND DESIGNER: -
SITE NUMBER: 313327
STORE NUMBER: 2018088.55

TACO BELL
200 PARIS DRIVE
FRANKLIN, IN 44311

TACO BELL T40

DETAILS

C-503

LANDSCAPE NOTES & PLANTING SPECIFICATIONS

SCOPE OF WORK

1. THIS WORK SHALL CONSIST OF PERFORMING CLEARING AND GRUBBING, SOIL PREPARATION, FINISH GRADING, PLANTING AND DRAINAGE, INCLUDING ALL LABOR, MATERIALS, TOOLS, EQUIPMENT, AND ANY OTHER APPURTENANCES NECESSARY FOR THE COMPLETION OF THIS PROJECT.

2. QUANTITY TAKEOFF IS SUPPLIED FOR CONTRACTOR'S ASSISTANCE ONLY. CONTRACTOR IS RESPONSIBLE FOR SUPPLYING ALL PLANT MATERIALS AS PER PLAN.

3. NO ADDITIONAL COMPENSATION SHALL BE PAID TO THE CONTRACTOR FOR DAMAGE AND REPAIR WITHIN EASEMENT OR RIGHT-OF-WAY LIMITS.

PRESERVATION/PROTECTION (IF APPLICABLE)

1. CONTRACTOR SHALL MAINTAIN AND PRESERVE TREES AND SHRUBS NOT BEING REMOVED, INCLUDING THEIR ROOTS. TREE PROTECTION FENCING SHALL BE USED AT THE DRIP LINE OF ALL TREES AND SHRUBS WITHIN 50 FEET OF CONSTRUCTION EXCEPT AS SHOWN ON PLAN. FENCING SHALL REMAIN IN PLACE UNTIL FINAL PLANT INSPECTION FOLLOWING CONSTRUCTION. MATERIALS SHALL NOT BE STOCKPILED WITHIN THIS DEFINED AREA AND VEHICLES AND OTHER EQUIPMENT SHALL BE OPERATED TO AVOID SOIL COMPACTION.

2. FEEDER ROOTS SHOULD NOT BE CUT IN AN AREA EQUAL TO TWICE THE TREE CIRCUMFERENCE (MEASURED 6" ABOVE THE GROUND LINE IN INCHES) EXPRESSED IN FEET. (EXAMPLE: A CIRCUMFERENCE OF 10" WOULD HAVE A 'NO CUT' ZONE OF 20 FEET IN ALL DIRECTIONS FROM THE TREE). THIS SHOULD APPLY TO UTILITY SERVICES, IF FEASIBLE. THE ONLY EXCEPTION TO THIS REQUIREMENT WILL BE THOSE SPECIFICALLY ALLOWED BY THE LANDSCAPE ARCHITECT, SPECIFICATIONS OR AS INDICATION ON THE PLANS.

3. TREE TRUNKS AND EXPOSED ROOTS DAMAGED DURING EQUIPMENT OPERATIONS SHALL BE TREATED IN ACCORDANCE WITH THE ARBOR CULTURAL STANDARDS OF THE CITY.

PLANT MATERIALS

1. GENERAL - ALL MATERIALS SHALL BE OF ITS KIND AVAILABLE AND SHALL HAVE BEEN GROWN IN A CLIMATE SIMILAR TO THAT ON SITE.

2. PLANTS - ALL PLANTS SHALL BE HEALTHY, OF NORMAL GROWTH, WELL ROOTED, FREE FROM DISEASE AND INSECTS. QUALITY AND SIZE OF PLANT MATERIAL SHALL CONFORM TO ANSI Z60.1 "AMERICAN STANDARDS FOR NURSERY STOCK".

3. VARIETIES AND SIZES OF PLANTS SHALL BE AS SHOWN ON DRAWINGS.

4. PLANTS SHALL BE IN A HEALTHY, VIGOROUS CONDITION, FREE OF DEAD OR BROKEN BRANCHES, SCARS THAT ARE NOT COMPLETELY HEALED, FROST CRACKS, DISFIGURING KNOTS, BROKEN OR ABRADED BARK, REDUNDANT LEADERS OR BRANCHES, OR ABERRATIONS OF ANY KIND. PLANTS SHALL NOT HAVE MULTIPLE LEADERS, UNLESS THIS IS THE NATURAL FORM.

5. BALLED AND BURLAPPED (B&B) PLANTS SHALL BE DUG WITH A FIRM ROOT BALL OF NATURAL EARTH, OF A SIZE IN PROPORTION TO THE PLANT'S SIZE, AS MEASURED BY CALIPER, HEIGHT, OR SPREAD. BALLED AND BURLAPPED PLANTS SHALL BE HANDLED ONLY BY THE ROOT BALL, NOT BY THE TRUNK OR BRANCHES, AS THIS MAY BREAK OR LOOSEN THE ROOT BALL AND DAMAGE THE ROOT SYSTEM. CONTAINER PLANTS SHALL HAVE BEEN ESTABLISHED FOR A MINIMUM OF ONE FULL GROWING SEASON IN THEIR CONTAINERS BEFORE INSTALLATION. CONTAINER PLANTS SHALL BE HANDLED ONLY BY THE CONTAINER, NOT BY THE STEMS OR BRANCHES, AS THIS MAY PULL THE PLANT OUT OF THE CONTAINER AND BREAK OR LOOSEN THE ROOT BALL AND DAMAGE THE ROOT SYSTEM.

6. PLANTS SHALL BE PROTECTED FROM DRYING OUT DURING SHIPPING WITH TARPAULINS OR OTHER COVERINGS. PLANTS SHALL BE PROTECTED FROM DRYING OUT AFTER DELIVERY BY PLANTING IMMEDIATELY; IF THIS IS NOT POSSIBLE, THE ROOT BALL SHALL BE COVERED WITH PEAT MOSS OR EARTH, AND WATERED FREQUENTLY TO KEEP IT MOIST UNTIL PLANTING.

7. DO NOT HANDLE, MOVE, BIND, TIE OR OTHERWISE TREAT PLANTS SO AS TO DAMAGE THE ROOT BALL, ROOTS, TRUNK, OR BRANCHES IN ANY WAY.

TOPSOIL

1. TOPSOIL HAS BEEN (OR WILL BE) STOCKPILED FOR REUSE IN LANDSCAPE WORK. IF QUANTITY OF STOCKPILED TOPSOIL IS INSUFFICIENT, PROVIDE ADDITIONAL TOPSOIL AS REQUIRED TO COMPLETE LANDSCAPE WORK. IMPORTED TOPSOIL SHALL CONSIST OF LOOSE, FRIABLE, LOAMY TOPSOIL WITHOUT ADMIXTURE OF SUBSOIL OR REFUSE. ACCEPTABLE TOPSOIL SHALL CONTAIN NOT LESS THAN 3 PERCENT NOR MORE THAN 20 PERCENT ORGANIC MATTER.

2. PLANTING BACKFILL FOR PARKING LOT ISLANDS SHALL CONSIST OF A HOMOGENEOUS MIXTURE OF 3 PARTS TOPSOIL TO ONE PART SPHAGNUM PEAT INSTALLED OVER A 6" THICKNESS OF NO. 57 AGGREGATE.

SOIL CONDITIONING

1. OBTAIN LABORATORY ANALYSIS OF STOCKPILED AND IMPORTED TOPSOIL COMPLETE WITH RECOMMENDATIONS FOR SOIL AMENDMENT.

2. BEFORE MIXING, CLEAN TOPSOIL OF ROOTS, PLANTS, SOD, STONES, CLAY LUMPS, AND OTHER EXTRANEOUS MATERIALS HARMFUL OR TOXIC TO PLANT GROWTH.

3. MIX SPECIFIED SOIL AMENDMENTS AND FERTILIZERS WITH TOPSOIL AT RATES SPECIFIED BY THE LAB REPORT. DELAY MIXING OF FERTILIZER IF PLANTING WILL NOT FOLLOW PLACING OF PLANTING SOIL WITHIN A FEW DAYS.

4. FOR PLANTING BEDS AND LAWNS, MIX PLANTING SOIL EITHER PRIOR TO PLANTING OR APPLY ON SURFACE OF TOPSOIL AND MIX THOROUGHLY BEFORE PLANTING. MIX LIME WITH DRY SOIL PRIOR TO MIXING OF FERTILIZER.

5. PREVENT LIME FROM CONTACTING ROOTS OF ACID-LOVING PLANTS.

6. APPLY PHOSPHORIC ACID FERTILIZER (OTHER THAN THAT CONSTITUTING A PORTION OF COMPLETE FERTILIZERS) DIRECTLY TO SUBGRADE BEFORE APPLYING PLANTING SOIL AND TILLING.

OTHER MATERIALS

1. BED EDGING - EDGING SHALL BE 4" STEEL EDGING WITH THREE (3) METAL ANCHOR STAKES PER 20 FOOT SECTION. ALL MASS PLANTING BEDS SHALL HAVE EDGING PLACED BETWEEN MULCH AREA AND ANY ADJACENT TURF AREA.

2. MULCH: ORGANIC MULCH FREE FROM DELETERIOUS MATERIALS AND SUITABLE FOR TOP DRESSING OF TREES, SHRUBS, OR PLANTS AND CONSISTING OF THE FOLLOWING:

   a. RIVER ROCK MULCH AREA: AGGREGATE MULCH, 3/4"-2" IN SIZE, WASHED AND ROUNDED, SHALL BE INSTALLED WITHIN THE RIVER ROCK MULCH AREA PER THE PLAN. RIVER ROCK MULCH SHALL BE INSTALLED AT 3" INCHES DEPTH.

   b. NON-DRYED, DOUBLE SHREDDED HARDWOOD SHALL BE INSTALLED IN ALL OTHER LANDSCAPE BEDS OUTSIDE OF THE RIVER ROCK MULCH AREA AT A DEPTH OF 3 INCHES.

3. WEED BARRIER - POLYETHYLENE FILTER FABRIC DESIGNED TO PERMIT WATER INFILTRATION WHILE PREVENTING WEED GROWTH-TO BE INSTALLED IN ALL PLANTING BEDS.

GENERAL WORK PROCEDURES

1. LANDSCAPE WORK SHALL BE ACCORDING TO THE WORKMANLIKE STANDARDS ESTABLISHED FOR LANDSCAPE CONSTRUCTION AND PLANTING IN THE INDIANA STANDARDIZED LANDSCAPE SPECIFICATIONS (ASLA) AND ANY LOCAL LANDSCAPE ORDINANCES.

2. CONTRACTOR SHALL OBTAIN A COPY OF LOCAL ORDINANCES REGARDING ACCEPTABLE PLANT AND PLANTING DETAILS AND ABIDE BY THOSE ORDINANCES AND DETAILS.

3. ENGINEER RESERVES THE RIGHT TO REJECT ALL PLANT MATERIAL DEEMED NOT ACCEPTABLE.

4. ANY PROPOSED PLANT SUBSTITUTIONS SHALL BE EQUIVALENT IN FORM, HABIT, STRUCTURE, BRANCHING AND LEAF TYPE AND MUST BE ISSUED TO THE LANDSCAPE ARCHITECT FOR APPROVAL, IN WRITING, PRIOR TO INSTALLATION.

WEEDING

1. BEFORE AND DURING PRELIMINARY GRADING AND FINISH GRADING, ALL WEEDS AND GRASSES SHALL BE DUG OUT BY THE ROOTS AND DISPOSED OF AT THE CONTRACTOR'S EXPENSE.

PLANTING

1. POSITION TREES AND SHRUBS AT THEIR INTENDED LOCATIONS AS PER THE PLANS AND SECURE THE APPROVAL OF THE OWNER BEFORE EXCAVATING PITS, MAKING NECESSARY ADJUSTMENTS AS DIRECTED.

2. PLANTING PITS SHALL BE AS PER DETAILS.

3. PREPARED SOIL SHALL BE TAMPED FIRMLY AT BOTTOM OF PIT. FILL PREPARED SOIL AROUND BALL OF PLANT. COMPLETE BACKFILLING AND WATER THOROUGHLY.

4. PREPARE RAISED EARTH BASIN AS WIDE AS PLANTING HOLE OF EACH PLANT.

5. WATER IMMEDIATELY AFTER PLANTING. WATER SHALL BE APPLIED TO EACH TREE AND SHRUB IN SUCH MANNER AS NOT TO DISTURB BACKFILL AND TO THE EXTENT THAT ALL MATERIALS IN THE PLANTING HOLE ARE THOROUGHLY SATURATED.

6. INSTALL BED EDGING AND MULCH.

7. REMOVE ALL SALES TAGS, STRINGS, STRAPS, WIRE, ROPE OR OTHER MATERIALS THAT MAY INHIBIT PLANT GROWTH BOTH ABOVE AND BELOW THE SURFACE OF THE SOIL.

8. REMOVE ANY BROKEN, SUCKERING, DISEASED, CRISSCROSSED OR AESTHETICALLY DISPLEASING BRANCHES BACK TO LIVE LEADER OR SIDE LATERAL WITH A FLUSH CUT.

9. MULCH TREES AND SHRUBS AND OTHER AREAS NOTED ON THE PLANTING PLAN WITH A 3" LAYER OF MULCH AS SPECIFIED IN NOTE 2 OF "OTHER MATERIALS".

FINISH GRADING

1. ALL AREAS WILL BE GRADED BY THE CONTRACTOR TO SUBSTANTIALLY PLUS/MINUS 0.1 FOOT OF FINISH GRADE.

2. ALL LAWN AND PLANTING AREAS SHALL BE GRADED TO A SMOOTH, EVEN, UNIFORM PLANE WITH NO ABRUPT CHANGE OF SURFACE. SOIL AREAS ADJACENT TO THE BUILDINGS SHALL SLOPE AWAY FROM THE BUILDINGS.

3. ALL PLANTING AREAS SHALL BE GRADED AND MAINTAINED TO ALLOW FREE FLOW OF SURFACE WATER.

4. PARKING LOT ISLAND SHALL BE BACKFILLED AS PART OF THIS CONTRACT.

GROUND COVER

1. SPACING AND VARIETY OF GROUND COVER SHALL BE AS SHOWN ON DRAWINGS.

2. MULCH GROUND COVER WITH 2" THICKNESS OF SPHAGNUM PEAT.

3. IMMEDIATELY AFTER PLANTING GROUND COVER, CONTRACTOR SHALL THOROUGHLY WATER GROUND COVER.

4. ALL GROUND COVER AREAS SHALL BE TREATED WITH A PRE-EMERGENT BEFORE FINAL LANDSCAPE INSPECTION. GROUND COVER AREAS SHALL BE WEEDED PRIOR TO APPLYING PRE-EMERGENT. PRE-EMERGENT TO BE APPLIED AS PER MANUFACTURER'S RECOMMENDATION.

GUARANTEE

1. CONTRACTOR SHALL GUARANTEE ALL PLANTS FOR A PERIOD OF ONE (1) YEAR FROM DATE OF PROJECT ACCEPTANCE BY THE OWNER.

IRRIGATION

1. CONTRACTOR SHALL PROVIDE & INSTALL AN IRRIGATION SYSTEM TO PROVIDE 100% COVERAGE OF THE SITE. AREAS WITHIN 5 FEET OF BUILDING WALLS SHALL BE IRRIGATED BY DRIP IRRIGATION OR SIMILAR. CONTRACTOR SHALL ENSURE BUILDING WALLS AND WINDOWS WILL NOT BE DAMAGED OR STAINED BY IMPROPER IRRIGATION INSTALLATION OR POOR SELECTION OF FIXTURES. SYSTEM SHALL INCLUDE ALL APPURTENANCES & BE APPROVED BY OWNER.

2. IRRIGATION CONTRACTOR SHALL PROVIDE A METHOD FOR WINTERIZATION. WINTERIZATION SHALL BE PERFORMED BY CONTRACTOR UPON COMPLETION IF SYSTEM IS INSTALLED BETWEEN NOVEMBER 1 AND MARCH 31.

CLEANUP

1. UPON THE COMPLETION OF ALL PLANTING WORK AND BEFORE FINAL ACCEPTANCE, THE CONTRACTOR SHALL REMOVE ALL MATERIAL, EQUIPMENT, AND DEBRIS RESULTING FROM HIS WORK. AN 'ACCEPTABLE CONDITION' SHALL BE AS DEFINED AND APPROVED BY THE OWNER'S AUTHORIZED REPRESENTATIVE.

MAINTENANCE

(MAINTENANCE PERIOD TO COMMENCE AFTER FINAL INSPECTION.)

1. MAINTENANCE PERIOD FOR THIS CONTRACT SHALL BE 90 CALENDAR DAYS COMMENCING AFTER FINAL INSPECTION OF CONSTRUCTION.

2. MAINTAIN TREES, SHRUBS AND OTHER PLANTS BY PRUNING, CULTIVATING AND WEEDING AS REQUIRED FOR HEALTHY GROWTH. RESTORE PLANTING SAUCERS. RESET TREES AND SHRUBS TO PROPER GRADES OR VERTICAL POSITION AS REQUIRED.

3. MAINTAIN LAWNS BY WATERING, MOWING, TRIMMING, AND OTHER OPERATIONS SUCH AS ROLLING, REGRADING AND REPLANTING AS REQUIRED TO ESTABLISH A SMOOTH, ACCEPTABLE LAWN, FREE OF ERODED OR BARE AREAS.

4. MAINTAIN THE LANDSCAPING BY KEEPING ALL PLANTS DISEASE-FREE AND PLANTING BEDS GROOMED, EXCEPT IN NATURALLY OCCURRING VEGETATION AREAS.

5. REPLACE ANY REQUIRED PLANTING(S), WHICH SEVERELY DECLINE OR DIE AFTER THE DATE OF PLANTING. SUCH REPLACEMENT SHALL OCCUR DURING THE NEXT APPROPRIATE PLANTING SEASON.

SEEDING

1. GRASS SEED SHALL BE FRESH, CLEAN, DRY, NEW-CROP SEED COMPLYING WITH THE ASSOCIATION OF OFFICIAL SEED ANALYSTS' "RULES FOR TESTING SEEDS" FOR PURITY AND GERMINATION TOLERANCES.

2. ALL AREAS TO BE SEEDED SHALL RECEIVE NO LESS THAN FIVE POUNDS OF SEED PER ONE THOUSAND SQUARE FEET. APPLY SEED AND PROTECT WITH STRAW MULCH AS REQUIRED FOR NEW LAWNS. GRASS SEED MIX SHALL CONSIST OF THE FOLLOWING:

PROPORTION	NAME	MIN.% GERM.	MIN.% PURE SEED	MAX.% WEED SEED
30%	KENTUCKY BLUEGRASS (POA PRATENSIS)	80	85	0.50
30%	CREEPING RED FESCUE (FESTUCA RUBRA)	85	98	0.50
20%	PERENNIAL RYE GRASS (LOLIUM PERENNE)	90	98	0.50
20%	ANNUAL RYEGRASS (LOLIUM MULTIFLORUM)	85	92	1.00

SODDING

1. SOD SHALL BE FIRST GRADE CERTIFIED KENTUCKY BLUEGRASS BLEND CONTAINING NOT MORE THAN 30 PERCENT OF OTHER GRASSES AND CLOVERS, AND FREE FROM ALL NOXIOUS WEEDS. SOD SHALL BE RECENTLY MOWED TO A HEIGHT OF NOT LESS THAN 3 INCHES. IT SHALL BE CUT INTO STRIPS OF NOT LESS THAN 3 FEET AND NOT OVER 6 FT. WITH A UNIFORM WIDTH OF NOT OVER 24 INCHES. THE SOD SHALL BE CUT TO A DEPTH EQUAL TO THE GROWTH OF THE FIBROUS ROOTS BUT IN NO CASE LESS THAN 1 INCH. SOD SHALL BE DELIVERED TO THE JOB WITHIN 24 HOURS AFTER BEING CUT AND SHALL BE INSTALLED WITHIN 48 HOURS AFTER BEING CUT. BEFORE SOD IS PLACED, THE SOD BED WILL HAVE BEEN EXCAVATED TO SUCH A DEPTH THAT WHEN THE SOD IS IN PLACE THE TOP OF THE SOD WILL BE FLUSH WITH THE SURROUNDING GRADE. NO SOD SHALL BE PLACED WHEN THE TEMPERATURE IS BELOW 32 DEGREES F. NO FROZEN SOD SHALL BE PLACED NOR SHALL ANY SOD BE PLACED ON FROZEN SOIL. WHEN SOD IS PLACED BETWEEN THE DATES OF JUNE 1ST AND OCTOBER 15TH, IT SHALL BE COVERED IMMEDIATELY WITH A STRAW MULCH 1 INCH THICK (LOOSE MEASUREMENT). AFTER LAYING, THE SOD SHALL BE WATERED THOROUGHLY AND TAMPED WITH APPROVED SOD TAMPERS SUFFICIENTLY TO BRING THE SOD INTO CLOSE CONTACT WITH THE SOD BED AND INSURE TIGHT JOINTS BETWEEN THE SECTIONS OR STRIPS. THE CONTRACTOR SHALL KEEP ALL SODDED AREAS INCLUDING SUBGRADE, THOROUGHLY MOIST FOR 30 DAYS AFTER SODDING. THE CONTRACTOR SHALL REPAIR ANY AREAS DAMAGED FOLLOWING INSTALLATION AS DIRECTED BY THE ENGINEER. SOD SHALL BE IN PLACE AT LEAST 30 DAYS BEFORE FINAL ACCEPTANCE.

PLANTING SCHEDULE

1. ALL PLANTING IS RECOMMENDED TO BE DONE WITHIN THE FOLLOWING DATES. WHEN PLANTING OUTSIDE THESE DATES, WRITTEN DOCUMENTATION SHALL BE PROVIDED THAT SURVIVAL OR REPLACEMENT WILL BE ENSURED. NO PLANTING SHALL BE DONE IN FROZEN SOIL.

NORMAL PLANTING SEASONS	SPRING	FALL
ALL TREES AND SHRUBS	MARCH 15-MAY 15	OCTOBER 1-DECEMBER 1
EVERGREENS	APRIL 1-MAY 15	OCTOBER 1-NOVEMBER 15
GROUNDCOVERS	APRIL 1-JUNE1	WHEN SOD IS WORKABLE
SEED AND MULCH	APRIL 1-MAY 15	OCTOBER 1-NOVEMBER 15

GENERAL NOTE

1. ALL AREAS DISTURBED BY CONSTRUCTION THAT ARE WITHIN THE RIGHT-OF-WAY SHALL BE FINE GRADED TO MAINTAIN POSITIVE DRAINAGE, HAVE A 4" LAYER OF TOPSOIL APPLIED AND BE SEEDED ACCORDING TO SPECIFICATIONS ON THIS SHEET.

GPD GROUP, INC.
520 South Main Street, Suite 2531
Akron, OH 44311
330.572.2100 Fax: 330.572.2102

THIS SUBMITTAL IS FOR PERMITTING PURPOSES ONLY AND IS PRELIMINARY IN NATURE. AS SUCH, ANY OTHER USE OR RELIANCE IS STRICTLY PROHIBITED.

IVAN VALENTIC REGISTERED No. LA20160005 STATE OF INDIANA LANDSCAPE ARCHITECT

02/07/19

CONTRACT DATE:
BUILDING TYPE: ME T40
PLAN VERSION:
BRAND DESIGNER: -
SITE NUMBER: 313327
STORE NUMBER: 2018088.55

TACO BELL
200 PARIS DRIVE
FRANKLIN, IN 44311

T40

LANDSCAPE NOTES

L-001

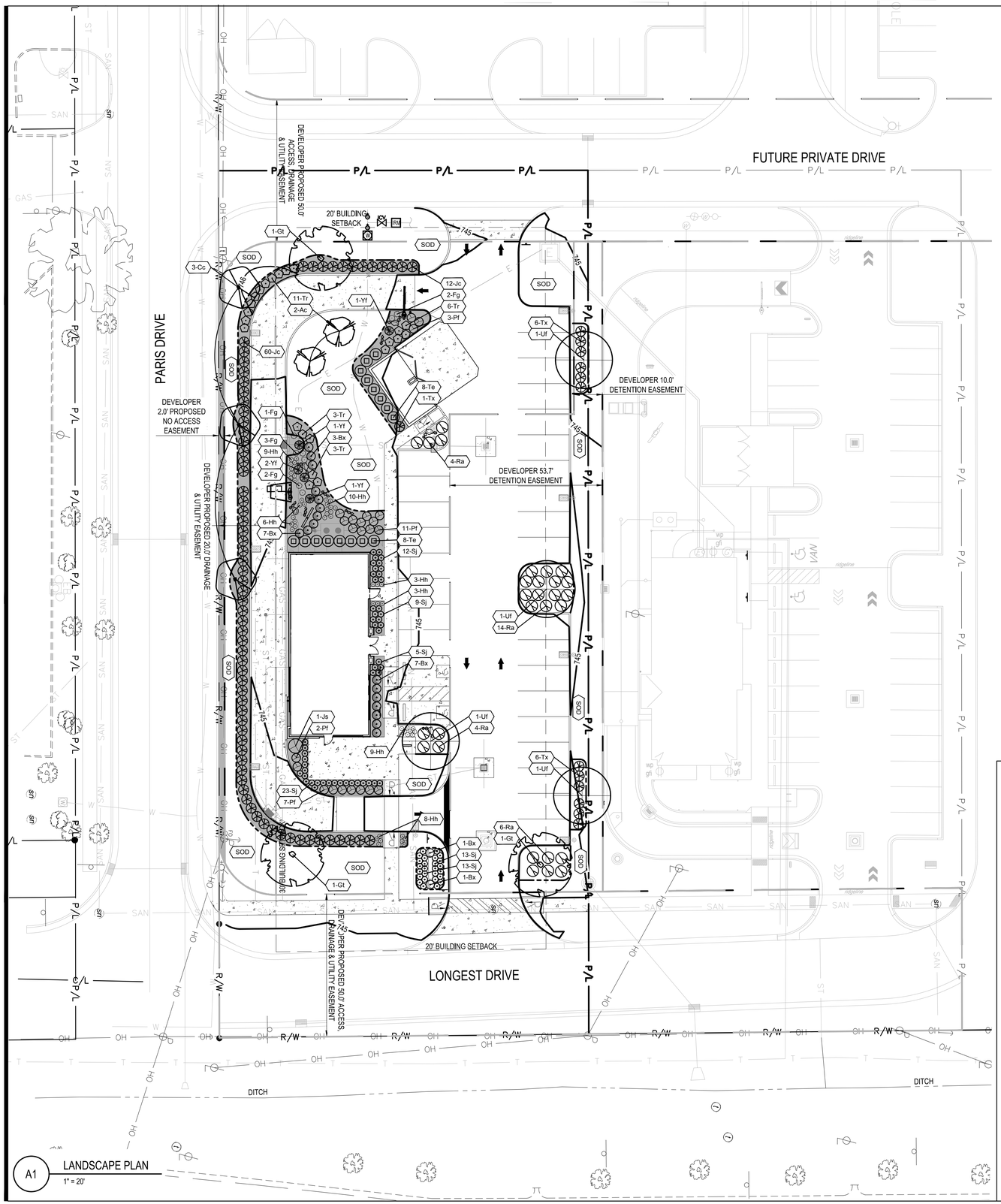

A1 LANDSCAPE PLAN
1" = 20'

"DON'T DIG BLIND"
"HOLEY MOLEY" SEZ:
Call Monday thru Friday – 7 am. to 6 pm.
1–800–382–5544
TOLL FREE
1–800–428–5200
OUTSIDE INDIANA

NOTICE TO CONTRACTOR

PER INDIANA STATE LAW 15-69-1991, IT IS AGAINST THE LAW TO EXCAVATE WITHOUT NOTIFYING THE UNDERGROUND LOCATION SERVICE TWO (2) WORKING DAYS BEFORE COMMENCING WORK.

N
0 20
10 40
1"=20'
Horizontal Scale in Feet

LANDSCAPE NOTES

1. MULCH PER LANDSCAPE SPECIFICATIONS.
2. ALL DISTURBED AREAS NOT TO BE PAVED OR MULCHED SHALL BE SODDED PER SPECIFICATIONS.

LANDSCAPE LEGEND

EXISTING TREE

PROPOSED LANDSCAPE BED EDGE

PROPOSED TREE

PROPOSED SHRUB / PERENNIAL

PROPOSED LIMESTONE BOULDER, DESERT SAND, 12"-36"

##-Xx PROPOSED PLANT QUANTITY AND SYMBOL

SOD PROPOSED LAWN AREA

PROPOSED RIVER ROCK MULCH AREA, SEE MULCH NOTES ON SHEET L-001

LANDSCAPE CALCULATIONS

PARKING LOT PERIMETER CALCULATION: NORTH 72.9 LF	REQUIRED	PROVIDED
TREES	1	1
SHRUBS	1	12

PARKING LOT PERIMETER CALCULATION: SOUTH 68.1 LF	REQUIRED	PROVIDED
TREES	1	2
SHRUBS	1	19

PARKING LOT PERIMETER CALCULATION: WEST 196.3 LF	REQUIRED	PROVIDED
TREES	3	3
SHRUBS	3	53

PARKING LOT INTERIOR CALCULATION: PAVED SURFACE: 13,758 SF	REQUIRED	PROVIDED
LANDSCAPE ISLANDS (5%)	688 SF	3,603 SF
TREES	3	4

PLANT LIST

Symbol	Botanical Name	Common Name	Qty.	Min. Size	Condition	Remarks
Ac	Acer campestre	Hedge Maple	2	2" Cal.	B&B	Matching
Bx	Buxus x 'Green Gem'	Green Gem Boxwood	19	24" H	B&B	3' o/c
Cc	Cercis canadensis	Eastern Redbud	3	2" Cal.	B&B	Matching
Hh	Hemerocallis 'Happy Returns'	Happy Returns Daylily	50	No. 1	Cont.	1.5' o/c
Fg	Festuca gluaca	Blue Fescue	8	No. 2	Cont.	Per Plan
Gt	Gleditsia triacanthos f. inermis 'Skyline'	Skyline Honeylocust	3	2.5" Cal.	B&B	Specimen
Jc	Juniperus chinensis 'Sea Green'	Sea Green Juniper	85	24" H	B&B	3.5' o/c
Js	Juniperus scopulorum 'Wichita Blue'	Wichita Blue Juniper	1	5' H	B&B	Specimen
Pf	Potentilla fruticosa 'Goldfinger'	Goldfinger Potentilla	23	24" H, No. 3	Cont.	3' o/c
Ra	Rhus aromatica 'Gro-Low'	Gro-Low Fragrant Sumac	28	18" H, No. 3	Cont.	4.5' o/c
Sj	Spiraea japonica 'Double Play' 'Candy Corn'	Double Play Candy Corn Spirea	75	No. 3	Cont.	2' o/c
Te	Thuja occidentalis 'Smaragd'	Emerald Arborvitae	16	5' H	B&B	4' o/c
Tr	Thuja occidentalis 'Rheingold'	Rheingold Arborvitae	23	24" H Min.	B&B	3' o/c
Uf	Ulmus x'Frontier'	Frontier Elm	4	2" Cal.	B&B	Specimen
Yf	Yucca filamentosa 'Color Guard'	Color Guard Yucca	6	No. 5	Cont.	Per Plan

GPD GROUP, INC.
520 South Main Street, Suite 2531
Akron, OH 44311
330.572.2100 Fax: 330.572.2102

THIS SUBMITTAL IS FOR PERMITTING PURPOSES ONLY AND IS PRELIMINARY IN NATURE. AS SUCH, ANY OTHER USE OR RELIANCE IS STRICTLY PROHIBITED.

IVAN VALENTIC REGISTERED No. LA201600005 STATE OF INDIANA LANDSCAPE ARCHITECT

02/07/19

CONTRACT DATE:
BUILDING TYPE: ME T40
PLAN VERSION:
BRAND DESIGNER: -
SITE NUMBER: 313327
STORE NUMBER: 2018088.55

TACO BELL
200 PARIS DRIVE
FRANKLIN, IN 44311

TACO BELL
T40

LANDSCAPE PLAN

L-101

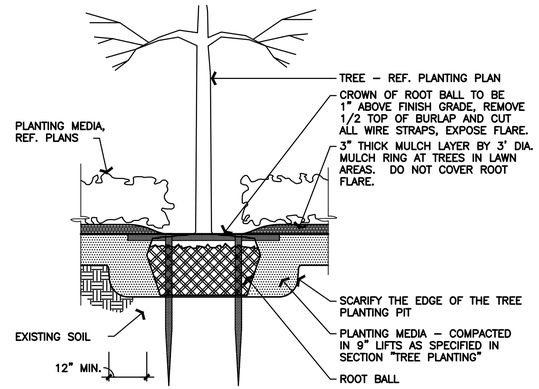

TREE PLANTING IN PLANTER – SECTION

1/2" = 1'–0" 0 2'

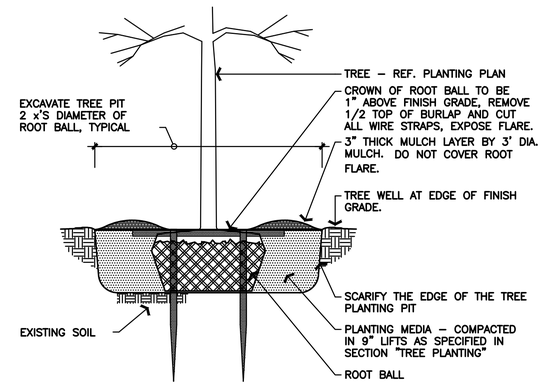

TREE PLANTING IN LAWN – SECTION

1/2" = 1'–0" 0 2'

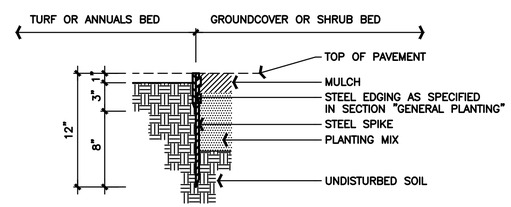

STEEL EDGING – SECTION

1 1/2" = 1'–0" 0 1'

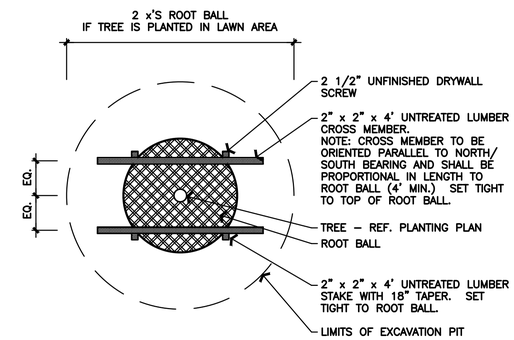

TYPICAL TREE STAKING – PLAN

1/2" = 1'–0" 0 2'

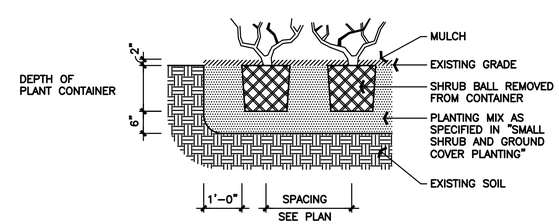

SHRUB PLANTING – SECTION

1/2" = 1'–0" 0 2'

GPD GROUP, INC.
520 South Main Street, Suite 2531
Akron, OH 44311
330.572.2100 Fax: 330.572.2102

THIS SUBMITTAL IS FOR PERMITTING PURPOSES ONLY AND IS PRELIMINARY IN NATURE. AS SUCH, ANY OTHER USE OR RELIANCE IS STRICTLY PROHIBITED.

IVAN VALENTIC REGISTERED No. LA201600005 STATE OF INDIANA LANDSCAPE ARCHITECT

02/07/19

CONTRACT DATE:	
BUILDING TYPE:	ME T40
PLAN VERSION:	
BRAND DESIGNER:	-
SITE NUMBER:	313327
STORE NUMBER:	2018088.55

TACO BELL

200 PARIS DRIVE
FRANKLIN, IN 44311

T40

LANDSCAPE DETAILS

L-501