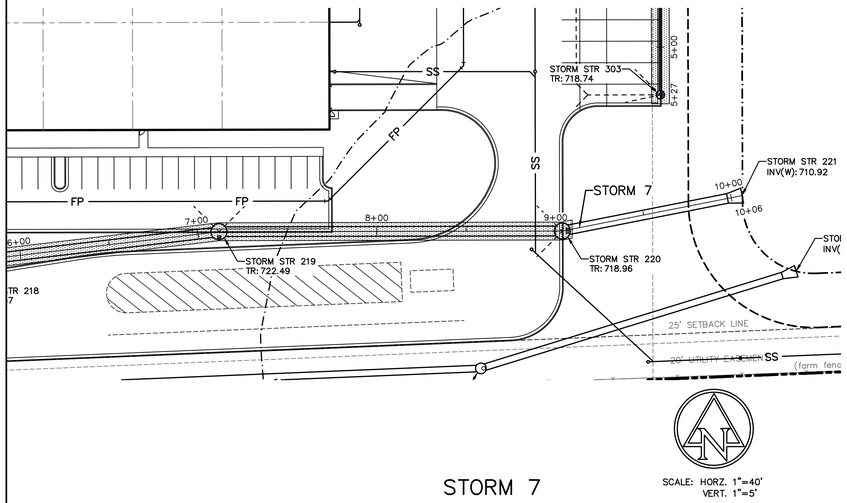
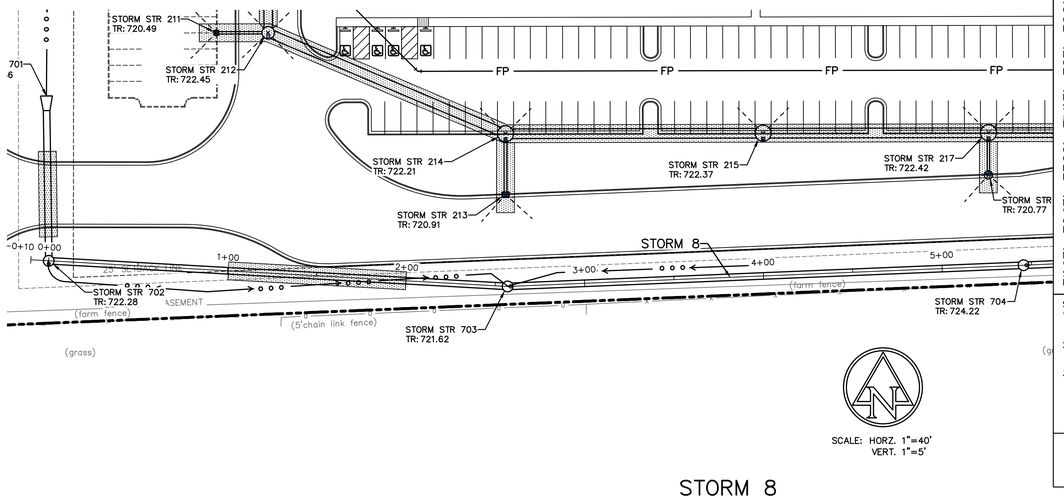


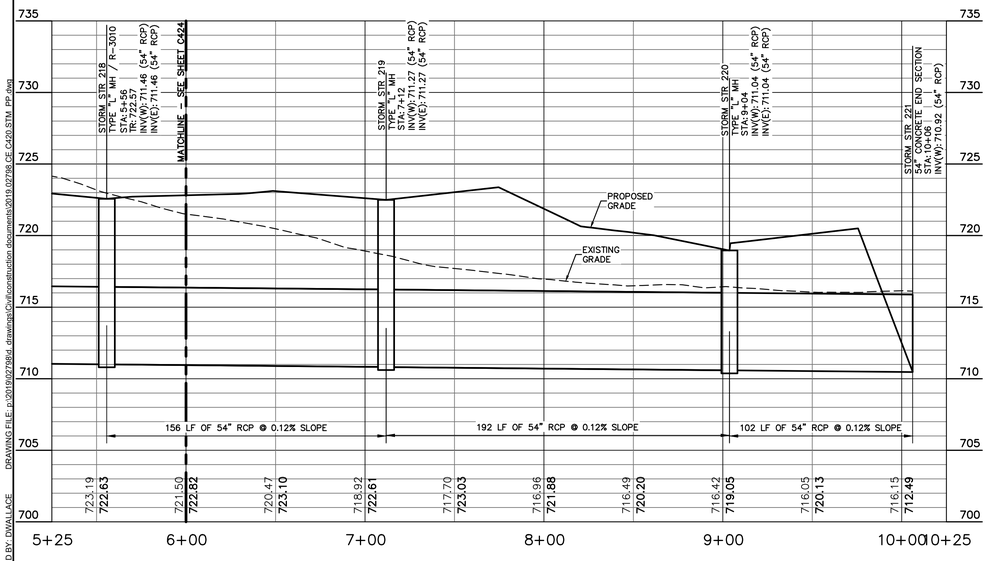
STORM 7

SCALE: HORZ. 1"=40'
VERT. 1"=5'

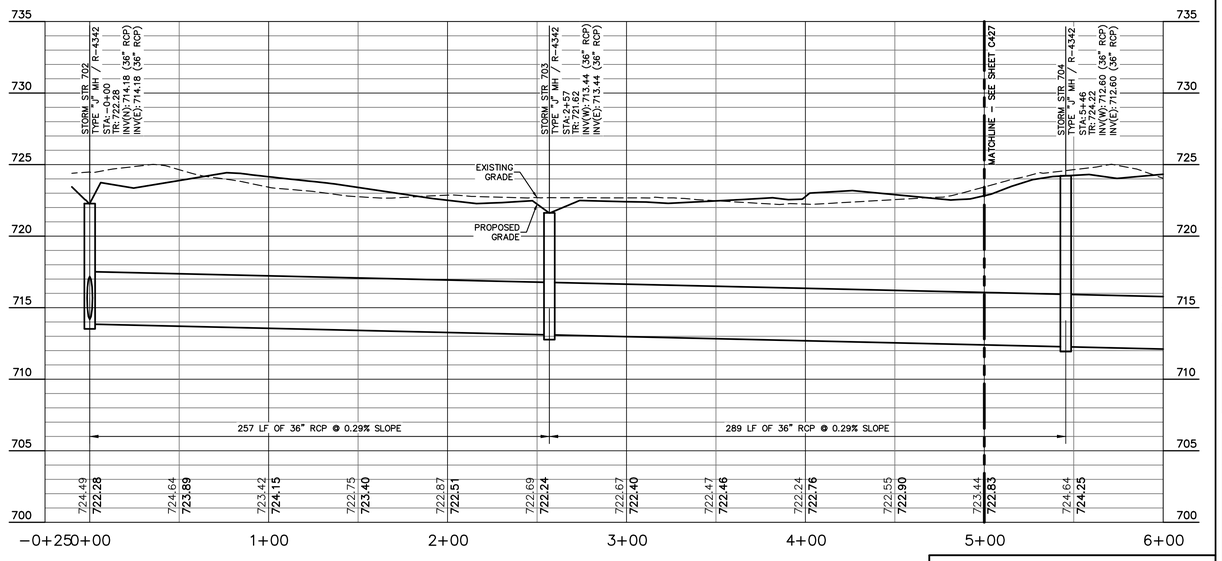


STORM 8

SCALE: HORZ. 1"=40'
VERT. 1"=5'



STORM 7



STORM 8

UTILITY CONTACTS

UTILITY	COMPANY	CONTACT	PHONE NO.
COMMUNICATIONS	CENTURYLINK (CTLCL)	BRUCE EMERICK	(574) 926-1247
ELECTRIC	JOHNSON COUNTY REMC	KEVIN SHELLEY	(317) 736-6174
GAS	VECTREN	JON EASTHAM	(765) 287-2119
SANITARY SEWER	CITY OF FRANKLIN, DPW	SALLY BROWN	(317) 736-3640
STORM SEWER	CITY OF FRANKLIN, DPW	SALLY BROWN	(317) 736-3640
WATER	INDIANA AMERICAN WATER	RYAN MOORE	(317) 885-2404

EXISTING LEGEND

- BEEHIVE INLET
- COMBINATION POLE
- ELECTRIC METER BOX
- GAS MARKER SIGN
- GUY WIRE
- HOSE BIB
- INLET
- MAILBOX
- PINE
- POST
- POWER POLE
- RIGHT OF WAY MONUMENT
- SIGN
- STAND PIPE
- STUMP
- SUB SURFACE DRAIN
- TEMPORARY BENCH MARK
- TEST HOLE
- TELEPHONE MARKER SIGN
- TELEPHONE PEDESTAL
- TRANSFORMER
- TREE
- VENT
- WELL

BENCHMARK DATA

(NAVD '88)

HELD OPUS SOLUTION 18-83940150 FOR BASE #1000 FOR INGCS JOHNSON COUNTY, IN

ASI TBM #32
CHISELED "X" ON SW BOLT OF FIRE HYDRANT EAST SIDE OF BARTRAM PARKWAY; ±300' SOUTH OF SR 44.
ELEV = 731.40

ASI TBM #50
MAG SPIKE SET IN WEST SIDE UTILITY POLE AT SW CORNER OF SR 44 AND COUNTY ROAD 525 E.
ELEV = 725.39

ASI TBM #51
MAG SPIKE SET IN SOUTH SIDE UTILITY POLE #40792 SOUTH SIDE OF SR 44 AND ±400' WEST OF MAILBOX #5557.
ELEV = 721.56

ASI TBM #52
CHISELED SQUARE ON WEST CORNER OF NW END OF CONCRETE HEADWALL OF BOX CULVERT UNDER SR 44 LOCATED ±600' SOUTHWEST OF COUNTY ROAD 600 E.
ELEV = 720.38

ASI TBM #53
MAG SPIKE SET IN WEST SIDE UTILITY POLE #06135 ON WEST SIDE OF OF COUNTY ROAD 525 E AND ±900' SOUTH OF SR 44.
ELEV = 735.00

ASI TBM #54
MAG SPIKE SET IN NW SIDE UTILITY POLE #12P1002 ON WEST SIDE OF COUNTY ROAD 525 E AND ±200' NORTH OF SOUTH PROPERTY LINE.
ELEV = 724.93

STORM SEWER NOTES:
1. ALL CASTINGS SHALL BE LABELED "DUMP NO WASTE – DRAINS TO WATERWAY"
2. MANNINGS COEFFICIENT n = 0.012
3. THE GRANULAR BACKFILL AREAS SHOWN IN PLAN VIEW ARE AN ESTIMATE PROVIDED BY THE ENGINEER. EXACT LIMITS OF GRANULAR BACKFILL ARE TO BE DETERMINED IN THE FIELD BY THE CONTRACTOR BASED ON TRENCH WIDTH AND AS DIRECTED BY THE AUTHORITY HAVING JURISDICTION.

GRANULAR BACKFILL REQUIRED

GENERAL NOTES:
1. CONTRACTOR SHALL PROTECT AND NOT DESTROY THE PROPERTY CORNER MONUMENTS DURING CONSTRUCTION.
2. CONTRACTOR TO VERIFY LOCATION, SIZE AND DEPTH OF EXISTING UTILITIES PRIOR TO COMMENCING ANY CONSTRUCTION. CONTACT ENGINEER IF VARIATION EXISTS.
3. SEE SHEET C002 GENERAL NOTES FOR MORE INFORMATION.

!! CAUTION !!

THE LOCATIONS OF ALL EXISTING UNDERGROUND UTILITIES SHOWN ON THIS PLAN ARE BASED UPON ABOVE GROUND EVIDENCE (including, but not limited to, manholes, inlets, valves, and marks made upon the ground by others) AND ARE SPECULATIVE IN NATURE. THERE MAY ALSO BE OTHER EXISTING UNDERGROUND UTILITIES FOR WHICH THERE IS NO ABOVE GROUND EVIDENCE OR FOR WHICH NO ABOVE GROUND EVIDENCE WAS OBSERVED. THE EXACT LOCATIONS OF SAID EXISTING UNDERGROUND UTILITIES SHALL BE VERIFIED BY THE CONTRACTOR PRIOR TO ANY AND ALL CONSTRUCTION.

CALL TOLL FREE
"811" OR 1-800-382-5544
– INDIANA UNDERGROUND –

GDI CONSTRUCTION
9775 Crosspoint Blvd
Suite 105
Indianapolis, IN 46256
317.567.6100

AMERICAN STRUCTUREPOINT INC.
9025 River Road, Suite 200 | Indianapolis, Indiana 46240
TEL 317.547.5580 | FAX 317.543.0270
www.structurepoint.com

I-65 SOUTH LOGISTICS CENTER LOT 1

81/89 Forest Road
Franklin, Indiana

JUSTIN ERIC OLAH
REGISTERED
NO.
PE10900184
STATE OF INDIANA
PROFESSIONAL ENGINEER
NOT FOR CONSTRUCTION
APPROVED FOR BIDDING

CERTIFIED BY

ISSUANCE INDEX
DATE:
12/03/2020
PROJECT PHASE:
CONSTRUCTION DOCUMENTS

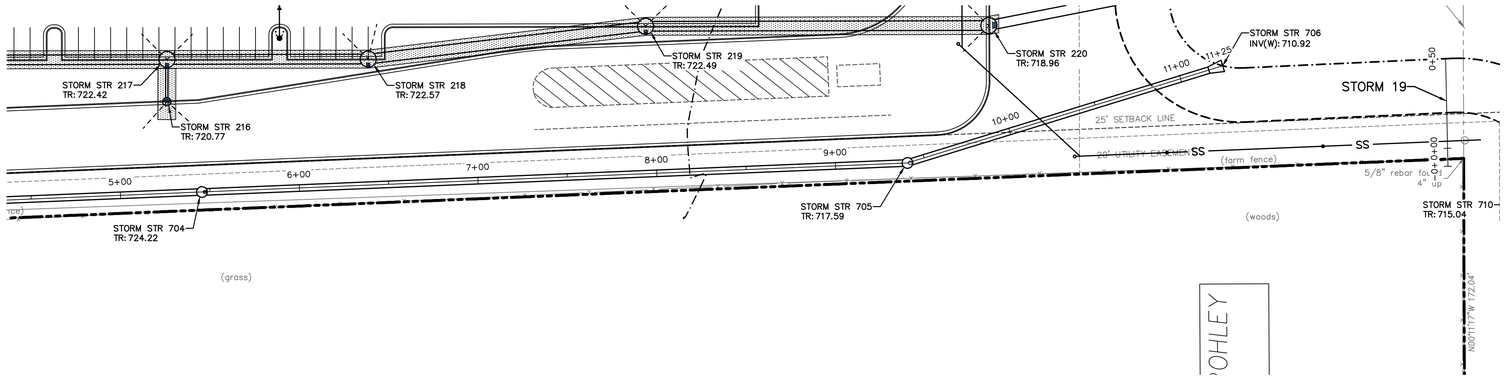
REVISION SCHEDULE		
NO.	DESCRIPTION	DATE

Project Number 2019.02798

STORM SEWER PLAN AND PROFILE

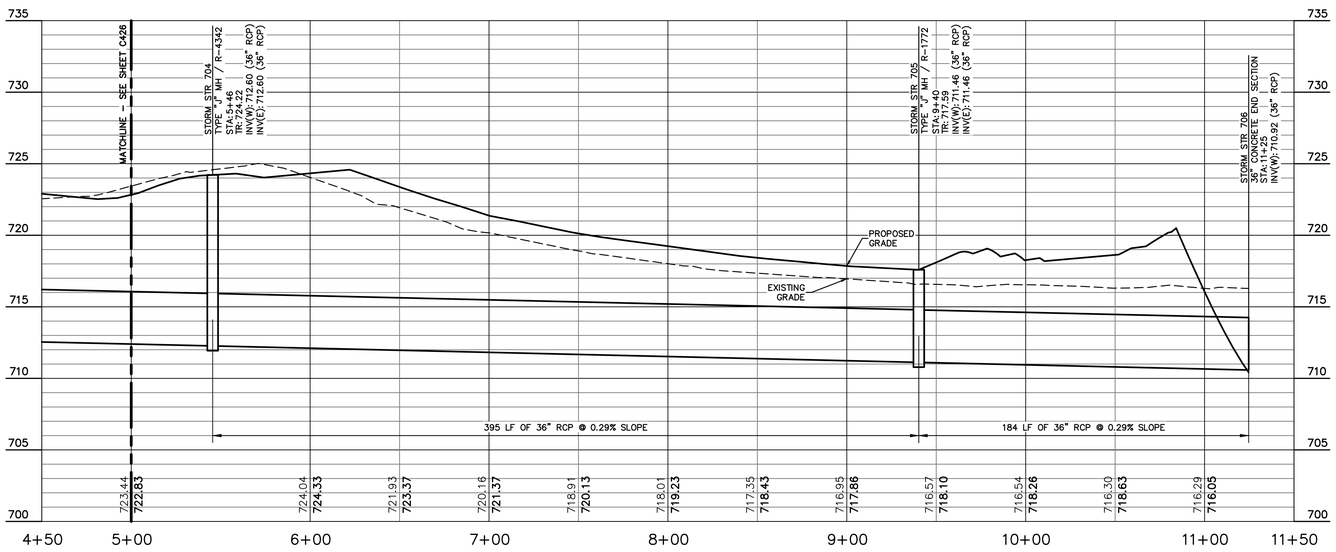
C425

PLOT DATE: 12/3/2020 11:57 AM
PLOT SCALE: 1:2.4849
EDIT DATE: 12/2/2020
EDITED BY: DWALLACE
DRAWING FILE p:\2019\02798\d_drawings\Civil\construction documents\2019.02798.CE.C425.STM_PP.dwg



SCALE: HORZ. 1"=40'
VERT. 1"=5'

STORM 8



EXISTING LEGEND

BEEHIVE INLET	STAND PIPE
COMBINATION POLE	STUMP
ELECTRIC METER BOX	SUB SURFACE DRAIN
GAS MARKER SIGN	TEMPORARY BENCH MARK
GUY WIRE	TEST HOLE
HOSE BIB	TELEPHONE MARKER SIGN
INLET	TELEPHONE PEDESTAL
MAILBOX	TRANSFORMER
PINE	TREE
POST	VENT
POWER POLE	WELL
RIGHT OF WAY MONUMENT	
SIGN	

BENCHMARK DATA

(NAVD '88)

HELD OPUS SOLUTION 18-83940150 FOR BASE #1000 FOR INGCS JOHNSON COUNTY, IN

ASI TBM #32
CHISELED "X" ON SW BOLT OF FIRE HYDRANT EAST SIDE OF BARTRAM PARKWAY; ±300' SOUTH OF SR 44.
ELEV = 731.40

ASI TBM #50
MAG SPIKE SET IN WEST SIDE UTILITY POLE AT SW CORNER OF SR 44 AND COUNTY ROAD 525 E.
ELEV = 725.39

ASI TBM #51
MAG SPIKE SET IN SOUTH SIDE UTILITY POLE #40792 SOUTH SIDE OF SR 44 AND ±400' WEST OF MAILBOX #5557.
ELEV = 721.56

ASI TBM #52
CHISELED SQUARE ON WEST CORNER OF NW END OF CONCRETE HEADWALL OF BOX CULVERT UNDER SR 44 LOCATED ±600' SOUTHWEST OF COUNTY ROAD 600 E.
ELEV = 720.38

ASI TBM #53
MAG SPIKE SET IN WEST SIDE UTILITY POLE #06135 ON WEST SIDE OF OF COUNTY ROAD 525 E AND ±900' SOUTH OF SR 44.
ELEV = 735.00

ASI TBM #54
MAG SPIKE SET IN NW SIDE UTILITY POLE #12P1002 ON WEST SIDE OF COUNTY ROAD 525 E AND ±200' NORTH OF SOUTH PROPERTY LINE.
ELEV = 724.93

STORM SEWER NOTES:
1. ALL CASTINGS SHALL BE LABELED "DUMP NO WASTE – DRAINS TO WATERWAY"
2. MANNINGS COEFFICIENT
   n = 0.012
3. THE GRANULAR BACKFILL AREAS SHOWN IN PLAN VIEW ARE AN ESTIMATE PROVIDED BY THE ENGINEER. EXACT LIMITS OF GRANULAR BACKFILL ARE TO BE DETERMINED IN THE FIELD BY THE CONTRACTOR BASED ON TRENCH WIDTH AND AS DIRECTED BY THE AUTHORITY HAVING JURISDICTION.

GRANULAR BACKFILL REQUIRED

UTILITY CONTACTS

UTILITY	COMPANY	CONTACT	PHONE NO.
COMMUNICATIONS	CENTURYLINK (CTLCL)	BRUCE EMERICK	(574) 926-1247
ELECTRIC	JOHNSON COUNTY REMC	KEVIN SHELLEY	(317) 736-6174
GAS	VECTREN	JON EASTHAM	(765) 287-2119
SANITARY SEWER	CITY OF FRANKLIN, DPW	SALLY BROWN	(317) 736-3640
STORM SEWER	CITY OF FRANKLIN, DPW	SALLY BROWN	(317) 736-3640
WATER	INDIANA AMERICAN WATER	RYAN MOORE	(317) 885-2404

GENERAL NOTES:
1. CONTRACTOR SHALL PROTECT AND NOT DESTROY THE PROPERTY CORNER MONUMENTS DURING CONSTRUCTION.
2. CONTRACTOR TO VERIFY LOCATION, SIZE AND DEPTH OF EXISTING UTILITIES PRIOR TO COMMENCING ANY CONSTRUCTION. CONTACT ENGINEER IF VARIATION EXISTS.
3. SEE SHEET C002 GENERAL NOTES FOR MORE INFORMATION.

!! CAUTION !!

THE LOCATIONS OF ALL EXISTING UNDERGROUND UTILITIES SHOWN ON THIS PLAN ARE BASED UPON ABOVE GROUND EVIDENCE (including, but not limited to, manholes, inlets, valves, and marks made upon the ground by others) AND ARE SPECULATIVE IN NATURE. THERE MAY ALSO BE OTHER EXISTING UNDERGROUND UTILITIES FOR WHICH THERE IS NO ABOVE GROUND EVIDENCE OR FOR WHICH NO ABOVE GROUND EVIDENCE WAS OBSERVED. THE EXACT LOCATIONS OF SAID EXISTING UNDERGROUND UTILITIES SHALL BE VERIFIED BY THE CONTRACTOR PRIOR TO ANY AND ALL CONSTRUCTION.

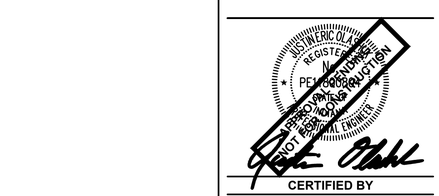
CALL TOLL FREE
"811" OR 1-800-382-5544
– INDIANA UNDERGROUND –

GDI CONSTRUCTION
9775 Crosspoint Blvd
Suite 105
Indianapolis, IN 46256
317.567.6100

AMERICAN STRUCTUREPOINT INC.
9025 River Road, Suite 200 | Indianapolis, Indiana 46240
TEL 317.547.5580 | FAX 317.543.0270
www.structurepoint.com

I-65 SOUTH LOGISTICS CENTER LOT 1

81/89 Forest Road
Franklin, Indiana



CERTIFIED BY

ISSUANCE INDEX
DATE:
12/03/2020
PROJECT PHASE:
CONSTRUCTION DOCUMENTS

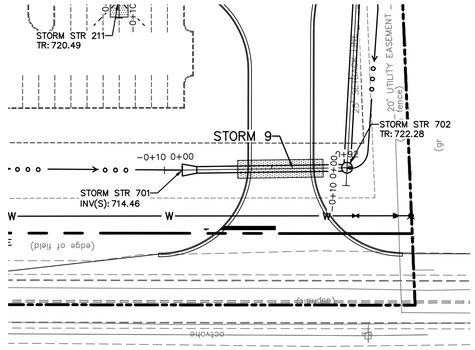
REVISION SCHEDULE		
NO.	DESCRIPTION	DATE

Project Number 2019.02798

STORM SEWER PLAN AND PROFILE

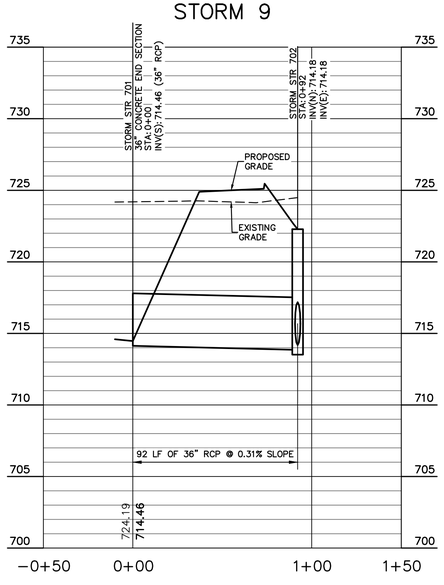
C426

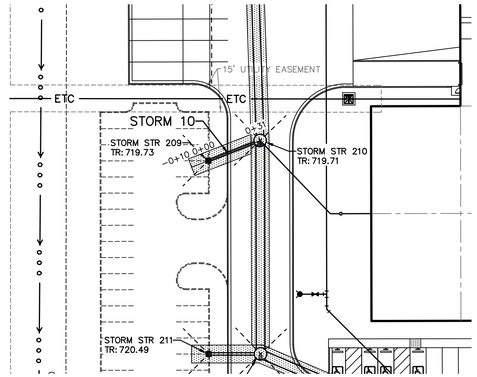
PLOT DATE: 12/3/2020 11:57 AM
PLOT SCALE: 1-2.5849 EDIT DATE: 12/2/2020 EDITED BY: DWALLACE DRAWING FILE: p:\2019\02798\d drawings\Civil\construction documents\2019.02798 CE C420 STM PP.dwg



SCALE: HORZ. 1"=40'
VERT. 1"=5'

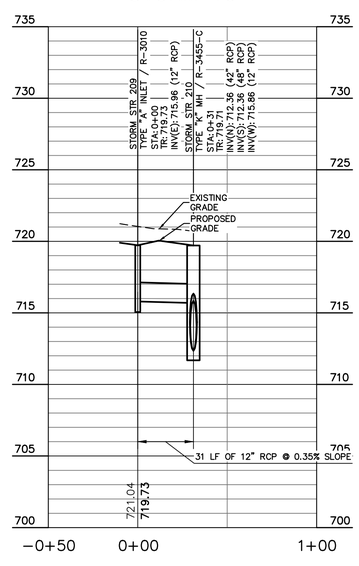
STORM 9

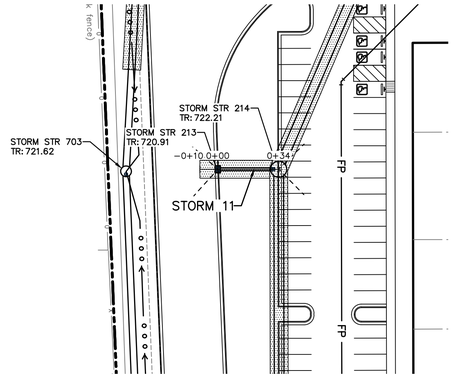




SCALE: HORZ. 1"=40'
VERT. 1"=5'

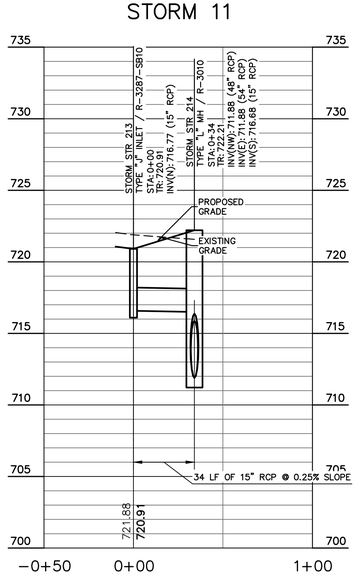
STORM 10





SCALE: HORZ. 1"=40'
VERT. 1"=5'

STORM 11



EXISTING LEGEND

BEEHIVE INLET	STAND PIPE
COMBINATION POLE	STUMP
ELECTRIC METER BOX	SUB SURFACE DRAIN
GAS MARKER SIGN	TEMPORARY BENCH MARK
GUY WIRE	TEST HOLE
HOSE BIB	TELEPHONE MARKER SIGN
INLET	TELEPHONE PEDESTAL
MAILBOX	TRANSFORMER
PINE	TREE
POST	VENT
POWER POLE	WELL
RIGHT OF WAY MONUMENT	
SIGN	

BENCHMARK DATA

(NAVD '88)

HELD OPUS SOLUTION 18-83940150 FOR BASE #1000 FOR INGCS JOHNSON COUNTY, IN

ASI TBM #32
CHISELED "X" ON SW BOLT OF FIRE HYDRANT EAST SIDE OF BARTRAM PARKWAY; ±300' SOUTH OF SR 44.
ELEV = 731.40

ASI TBM #50
MAG SPIKE SET IN WEST SIDE UTILITY POLE AT SW CORNER OF SR 44 AND COUNTY ROAD 525 E.
ELEV = 725.39

ASI TBM #51
MAG SPIKE SET IN SOUTH SIDE UTILITY POLE #40792 SOUTH SIDE OF SR 44 AND ±400' WEST OF MAILBOX #557.
ELEV = 721.56

ASI TBM #52
CHISELED SQUARE ON WEST CORNER OF NW END OF CONCRETE HEADWALL OF BOX CULVERT UNDER SR 44 LOCATED ±600' SOUTHWEST OF COUNTY ROAD 600 E.
ELEV = 720.38

ASI TBM #53
MAG SPIKE SET IN WEST SIDE UTILITY POLE #06135 ON WEST SIDE OF OF COUNTY ROAD 525 E AND ±900' SOUTH OF SR 44.
ELEV = 735.00

ASI TBM #54
MAG SPIKE SET IN NW SIDE UTILITY POLE #12P1002 ON WEST SIDE OF COUNTY ROAD 525 E AND ±200' NORTH OF SOUTH PROPERTY LINE.
ELEV = 724.93

STORM SEWER NOTES:
1. ALL CASTINGS SHALL BE LABELED "DUMP NO WASTE – DRAINS TO WATERWAY"
2. MANNINGS COEFFICIENT n = 0.012
3. THE GRANULAR BACKFILL AREAS SHOWN IN PLAN VIEW ARE AN ESTIMATE PROVIDED BY THE ENGINEER. EXACT LIMITS OF GRANULAR BACKFILL ARE TO BE DETERMINED IN THE FIELD BY THE CONTRACTOR BASED ON TRENCH WIDTH AND AS DIRECTED BY THE AUTHORITY HAVING JURISDICTION.

GRANULAR BACKFILL REQUIRED

GENERAL NOTES:
1. CONTRACTOR SHALL PROTECT AND NOT DESTROY THE PROPERTY CORNER MONUMENTS DURING CONSTRUCTION.
2. CONTRACTOR TO VERIFY LOCATION, SIZE AND DEPTH OF EXISTING UTILITIES PRIOR TO COMMENCING ANY CONSTRUCTION. CONTACT ENGINEER IF VARIATION EXISTS.
3. SEE SHEET C002 GENERAL NOTES FOR MORE INFORMATION.

UTILITY CONTACTS

UTILITY	COMPANY	CONTACT	PHONE NO.
COMMUNICATIONS	CENTURYLINK (CTLCL)	BRUCE EMERICK	(574) 926-1247
ELECTRIC	JOHNSON COUNTY REMC	KEVIN SHELLEY	(317) 736-6174
GAS	VECTREN	JON EASTHAM	(765) 287-2119
SANITARY SEWER	CITY OF FRANKLIN, DPW	SALLY BROWN	(317) 736-3640
STORM SEWER	CITY OF FRANKLIN, DPW	SALLY BROWN	(317) 736-3640
WATER	INDIANA AMERICAN WATER	RYAN MOORE	(317) 885-2404

!! CAUTION !!

THE LOCATIONS OF ALL EXISTING UNDERGROUND UTILITIES SHOWN ON THIS PLAN ARE BASED UPON ABOVE GROUND EVIDENCE (including, but not limited to, manholes, inlets, valves, and marks made upon the ground by others) AND ARE SPECULATIVE IN NATURE. THERE MAY ALSO BE OTHER EXISTING UNDERGROUND UTILITIES FOR WHICH THERE IS NO ABOVE GROUND EVIDENCE OR FOR WHICH NO ABOVE GROUND EVIDENCE WAS OBSERVED. THE EXACT LOCATIONS OF SAID EXISTING UNDERGROUND UTILITIES SHALL BE VERIFIED BY THE CONTRACTOR PRIOR TO ANY AND ALL CONSTRUCTION.

CALL TOLL FREE
"811" OR 1-800-382-5544
– INDIANA UNDERGROUND –

GDI CONSTRUCTION
9775 Crosspoint Blvd
Suite 105
Indianapolis, IN 46256

317.567.6100

AMERICAN STRUCTUREPOINT INC.
9025 River Road, Suite 200 | Indianapolis, Indiana 46240
TEL 317.547.5580 | FAX 317.543.0270
www.structurepoint.com

I-65 SOUTH LOGISTICS CENTER LOT 1

81/89 Forest Road
Franklin, Indiana

JUSTIN R. PIO — REGISTERED — PE — PROFESSIONAL ENGINEER — STATE OF INDIANA — NOT FOR CONSTRUCTION — AS-BUILT DRAWING

CERTIFIED BY

ISSUANCE INDEX
DATE:
12/03/2020
PROJECT PHASE:
CONSTRUCTION DOCUMENTS

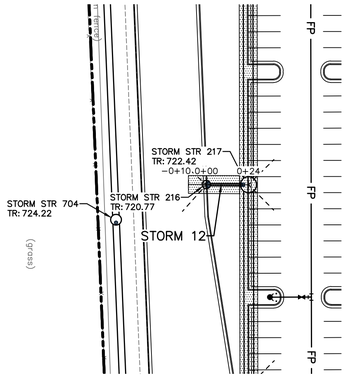
REVISION SCHEDULE		
NO.	DESCRIPTION	DATE

Project Number 2019.02798

STORM SEWER PLAN AND PROFILE

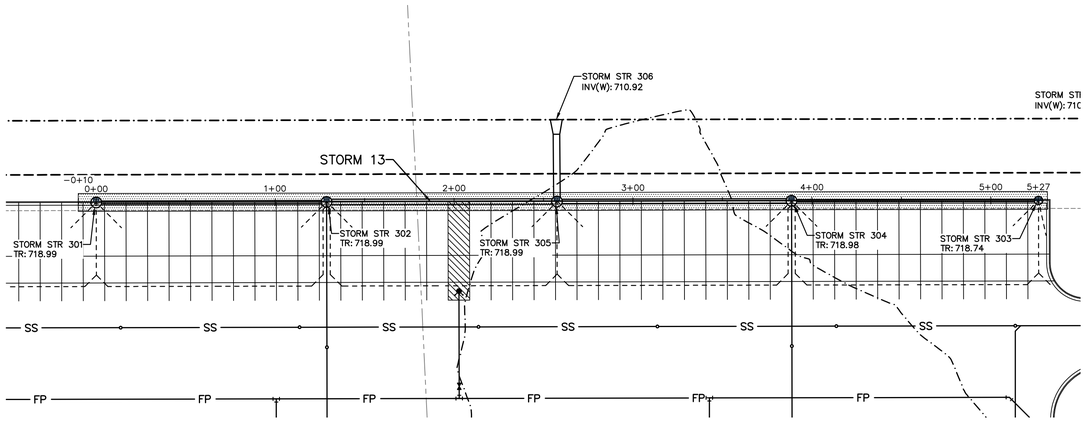
C427

PLOT DATE: 12/3/2020 11:58 AM
PLOT SCALE: 1:2.5849
EDIT DATE: 12/2/2020
EDITED BY: DWALLACE
DRAWING FILE: p:\2019\02798\d_drawings\Civil\construction documents\02798 CE C420 STM_PP.dwg



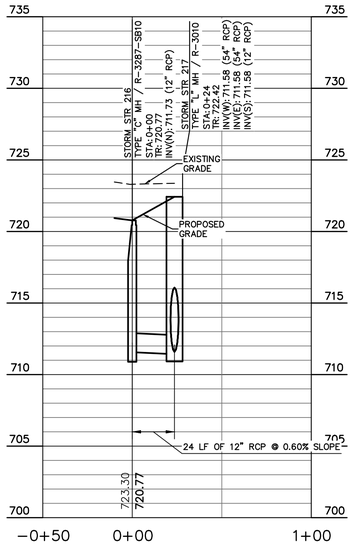
SCALE: HORZ. 1"=40'
VERT. 1"=5'

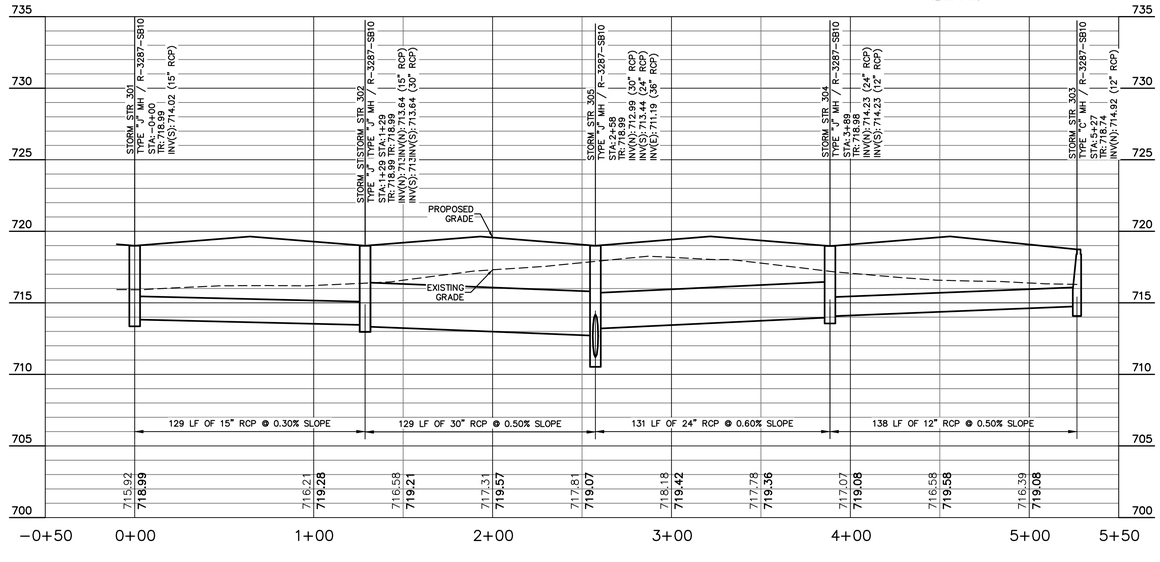
STORM 12



SCALE: HORZ. 1"=40'
VERT. 1"=5'

STORM 13





EXISTING LEGEND

BEEHIVE INLET	STAND PIPE
COMBINATION POLE	STUMP
ELECTRIC METER BOX	SUB SURFACE DRAIN
GAS MARKER SIGN	TEMPORARY BENCH MARK
GUY WIRE	TEST HOLE
HOSE BIB	TELEPHONE MARKER SIGN
INLET	TELEPHONE PEDESTAL
MAILBOX	TRANSFORMER
PINE	TREE
POST	VENT
POWER POLE	WELL
RIGHT OF WAY MONUMENT	
SIGN	

BENCHMARK DATA

(NAVD '88)

HELD OPUS SOLUTION 18-83940150 FOR BASE #1000 FOR INGCS JOHNSON COUNTY, IN

ASI TBM #32
CHISELED "X" ON SW BOLT OF FIRE HYDRANT EAST SIDE OF BARTRAM PARKWAY; ±300' SOUTH OF SR 44.
ELEV = 731.40

ASI TBM #50
MAG SPIKE SET IN WEST SIDE UTILITY POLE AT SW CORNER OF SR 44 AND COUNTY ROAD 525 E.
ELEV = 725.39

ASI TBM #51
MAG SPIKE SET IN SOUTH SIDE UTILITY POLE #40792 SOUTH SIDE OF SR 44 AND ±400' WEST OF MAILBOX #5557.
ELEV = 721.56

ASI TBM #52
CHISELED SQUARE ON WEST CORNER OF NW END OF CONCRETE HEADWALL OF BOX CULVERT UNDER SR 44 LOCATED ±600' SOUTHWEST OF COUNTY ROAD 600 E.
ELEV = 720.38

ASI TBM #53
MAG SPIKE SET IN WEST SIDE UTILITY POLE #06135 ON WEST SIDE OF OF COUNTY ROAD 525 E AND ±900' SOUTH OF SR 44.
ELEV = 735.00

ASI TBM #54
MAG SPIKE SET IN NW SIDE UTILITY POLE #12P1002 ON WEST SIDE OF COUNTY ROAD 525 E AND ±200' NORTH OF SOUTH PROPERTY LINE.
ELEV = 724.93

STORM SEWER NOTES:
1. ALL CASTINGS SHALL BE LABELED "DUMP NO WASTE – DRAINS TO WATERWAY"
2. MANNINGS COEFFICIENT n = 0.012
3. THE GRANULAR BACKFILL AREAS SHOWN IN PLAN VIEW ARE AN ESTIMATE PROVIDED BY THE ENGINEER. EXACT LIMITS OF GRANULAR BACKFILL ARE TO BE DETERMINED IN THE FIELD BY THE CONTRACTOR BASED ON TRENCH WIDTH AND AS DIRECTED BY THE AUTHORITY HAVING JURISDICTION.

GRANULAR BACKFILL REQUIRED

UTILITY CONTACTS

UTILITY	COMPANY	CONTACT	PHONE NO.
COMMUNICATIONS	CENTURYLINK (CTLCL)	BRUCE EMERICK	(574) 926-1247
ELECTRIC	JOHNSON COUNTY REMC	KEVIN SHELLEY	(317) 736-6174
GAS	VECTREN	JON EASTHAM	(765) 287-2119
SANITARY SEWER	CITY OF FRANKLIN, DPW	SALLY BROWN	(317) 736-3640
STORM SEWER	CITY OF FRANKLIN, DPW	SALLY BROWN	(317) 736-3640
WATER	INDIANA AMERICAN WATER	RYAN MOORE	(317) 885-2404

GENERAL NOTES:
1. CONTRACTOR SHALL PROTECT AND NOT DESTROY THE PROPERTY CORNER MONUMENTS DURING CONSTRUCTION.
2. CONTRACTOR TO VERIFY LOCATION, SIZE AND DEPTH OF EXISTING UTILITIES PRIOR TO COMMENCING ANY CONSTRUCTION. CONTACT ENGINEER IF VARIATION EXISTS.
3. SEE SHEET C002 GENERAL NOTES FOR MORE INFORMATION.

!! CAUTION !!

THE LOCATIONS OF ALL EXISTING UNDERGROUND UTILITIES SHOWN ON THIS PLAN ARE BASED UPON ABOVE GROUND EVIDENCE (Including, but not limited to, manholes, inlets, valves, and marks made upon the ground by others) AND ARE SPECULATIVE IN NATURE. THERE MAY ALSO BE OTHER EXISTING UNDERGROUND UTILITIES FOR WHICH THERE IS NO ABOVE GROUND EVIDENCE OR FOR WHICH NO ABOVE GROUND EVIDENCE WAS OBSERVED. THE EXACT LOCATIONS OF SAID EXISTING UNDERGROUND UTILITIES SHALL BE VERIFIED BY THE CONTRACTOR PRIOR TO ANY AND ALL CONSTRUCTION.

CALL TOLL FREE
"811" OR 1-800-382-5544
– INDIANA UNDERGROUND –

GDI CONSTRUCTION
9775 Crosspoint Blvd
Suite 105
Indianapolis, IN 46256
317.567.6100

AMERICAN STRUCTUREPOINT INC.
9025 River Road, Suite 200 | Indianapolis, Indiana 46240
TEL 317.547.5580 | FAX 317.543.0270
www.structurepoint.com

I-65 SOUTH LOGISTICS CENTER LOT 1

81/89 Forest Road
Franklin, Indiana

JUSTIN ERIC OLAH
REGISTERED
PE 10008744
PROFESSIONAL ENGINEER
STATE OF INDIANA
NOT APPROVED FOR CONSTRUCTION

CERTIFIED BY

ISSUANCE INDEX
DATE:
12/03/2020
PROJECT PHASE:
CONSTRUCTION DOCUMENTS

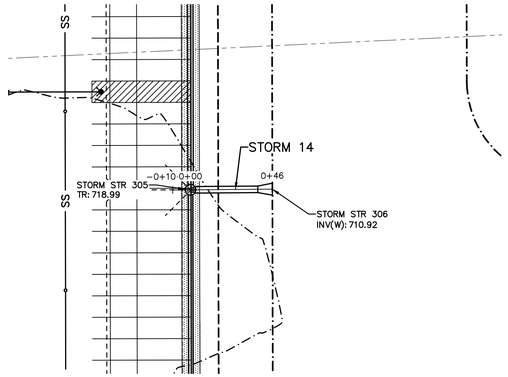
REVISION SCHEDULE		
NO.	DESCRIPTION	DATE

Project Number 2019.02798

STORM SEWER PLAN AND PROFILE

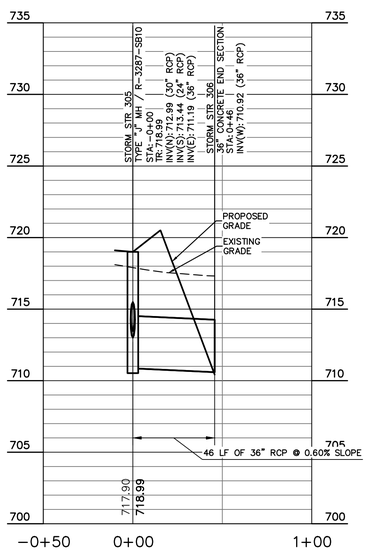
C428

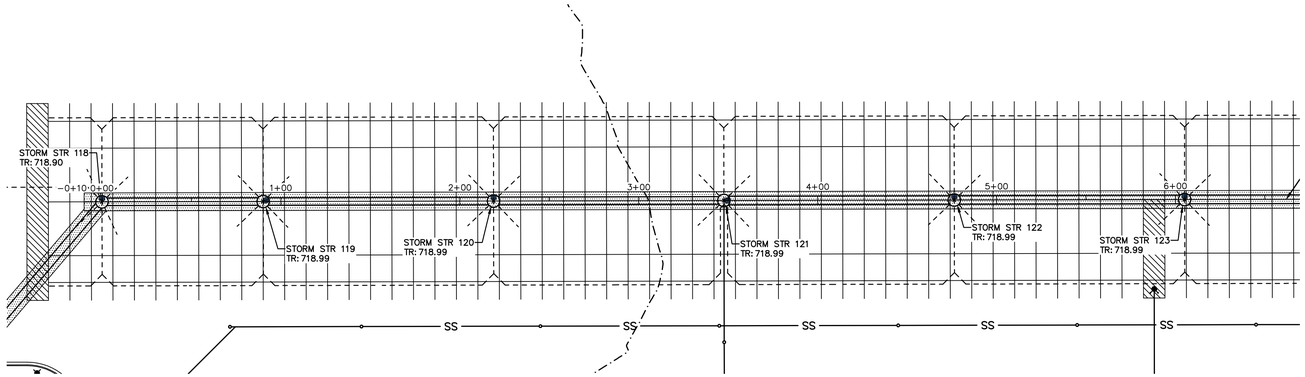
PLOT DATE: 12/3/2020 1:30 PM
PLOT SCALE: 1:2.4849
EDIT DATE: 12/3/2020
EDITED BY: MRVING
DRAWING FILE: p:\2019\02798\d_drawings\Civil\construction documents\2019.02798.CE.C428.STM_PP.dwg



SCALE: HORZ. 1"=40'
VERT. 1"=5'

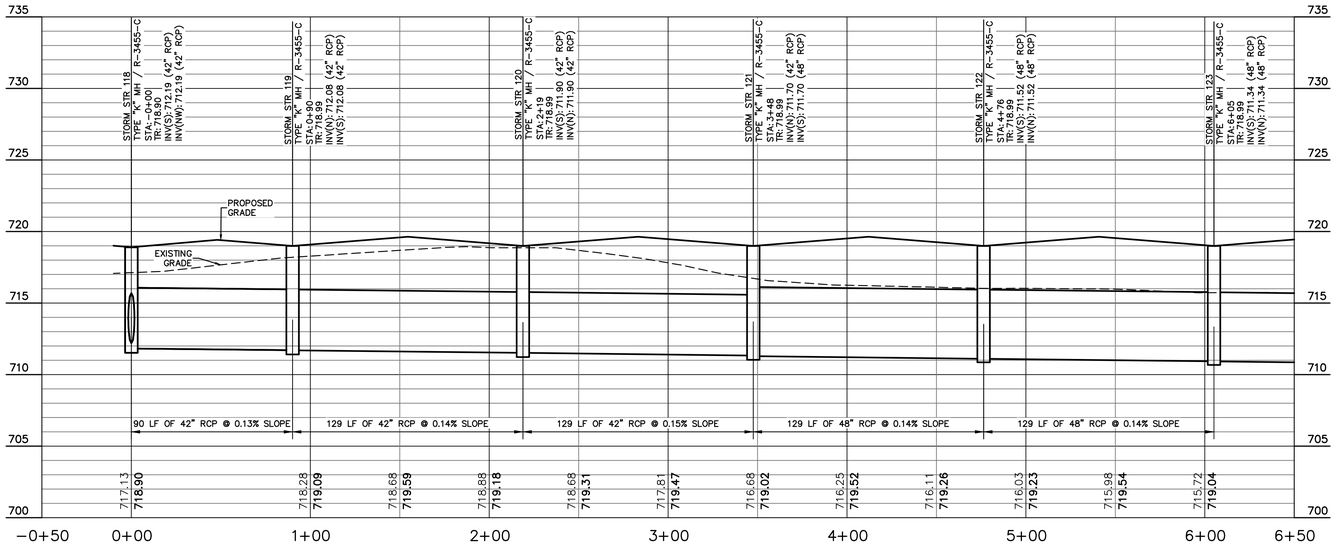
STORM 14





SCALE: HORZ. 1"=40'
VERT. 1"=5'

STORM 15



EXISTING LEGEND

BEEHIVE INLET	STAND PIPE
COMBINATION POLE	STUMP
ELECTRIC METER BOX	SUB SURFACE DRAIN
GAS MARKER SIGN	TEMPORARY BENCH MARK
GUY WIRE	TEST HOLE
HOSE BIB	TELEPHONE MARKER SIGN
INLET	TELEPHONE PEDESTAL
MAILBOX	TRANSFORMER
PINE	TREE
POST	VENT
POWER POLE	WELL
RIGHT OF WAY MONUMENT	
SIGN	

BENCHMARK DATA

(NAVD '88)

HELD OPUS SOLUTION 18-83940150 FOR BASE #1000 FOR INGCS JOHNSON COUNTY, IN

ASI TBM #32
CHISELED "X" ON SW BOLT OF FIRE HYDRANT EAST SIDE OF BARTRAM PARKWAY; ±300' SOUTH OF SR 44.
ELEV = 731.40

ASI TBM #50
MAG SPIKE SET IN WEST SIDE UTILITY POLE AT SW CORNER OF SR 44 AND COUNTY ROAD 525 E.
ELEV = 725.39

ASI TBM #51
MAG SPIKE SET IN SOUTH SIDE UTILITY POLE #40792 SOUTH SIDE OF SR 44 AND ±400' WEST OF MAILBOX #557.
ELEV = 721.56

ASI TBM #52
CHISELED SQUARE ON WEST CORNER OF NW END OF CONCRETE HEADWALL OF BOX CULVERT UNDER SR 44 LOCATED ±600' SOUTHWEST OF COUNTY ROAD 600 E.
ELEV = 720.38

ASI TBM #53
MAG SPIKE SET IN WEST SIDE UTILITY POLE #06135 ON WEST SIDE OF OF COUNTY ROAD 525 E AND ±900' SOUTH OF SR 44.
ELEV = 735.00

ASI TBM #54
MAG SPIKE SET IN NW SIDE UTILITY POLE #12P1002 ON WEST SIDE OF COUNTY ROAD 525 E AND ±200' NORTH OF SOUTH PROPERTY LINE.
ELEV = 724.93

STORM SEWER NOTES:
1. ALL CASTINGS SHALL BE LABELED "DUMP NO WASTE – DRAINS TO WATERWAY"
2. MANNINGS COEFFICIENT
   n = 0.012
3. THE GRANULAR BACKFILL AREAS SHOWN IN PLAN VIEW ARE AN ESTIMATE PROVIDED BY THE ENGINEER. EXACT LIMITS OF GRANULAR BACKFILL ARE TO BE DETERMINED IN THE FIELD BY THE CONTRACTOR BASED ON TRENCH WIDTH AND AS DIRECTED BY THE AUTHORITY HAVING JURISDICTION.

GRANULAR BACKFILL REQUIRED

UTILITY CONTACTS

UTILITY	COMPANY	CONTACT	PHONE NO.
COMMUNICATIONS	CENTURYLINK (CTLCL)	BRUCE EMERICK	(574) 926-1247
ELECTRIC	JOHNSON COUNTY REMC	KEVIN SHELLEY	(317) 736-6174
GAS	VECTREN	JON EASTHAM	(765) 287-2119
SANITARY SEWER	CITY OF FRANKLIN, DPW	SALLY BROWN	(317) 736-3640
STORM SEWER	CITY OF FRANKLIN, DPW	SALLY BROWN	(317) 736-3640
WATER	INDIANA AMERICAN WATER	RYAN MOORE	(317) 885-2404

GENERAL NOTES:
1. CONTRACTOR SHALL PROTECT AND NOT DESTROY THE PROPERTY CORNER MONUMENTS DURING CONSTRUCTION.
2. CONTRACTOR TO VERIFY LOCATION, SIZE AND DEPTH OF EXISTING UTILITIES PRIOR TO COMMENCING ANY CONSTRUCTION. CONTACT ENGINEER IF VARIATION EXISTS.
3. SEE SHEET C002 GENERAL NOTES FOR MORE INFORMATION.

!! CAUTION !!

THE LOCATIONS OF ALL EXISTING UNDERGROUND UTILITIES SHOWN ON THIS PLAN ARE BASED UPON ABOVE GROUND EVIDENCE (including, but not limited to, manholes, inlets, valves, and marks made upon the ground by others) AND ARE SPECULATIVE IN NATURE. THERE MAY ALSO BE OTHER EXISTING UNDERGROUND UTILITIES FOR WHICH THERE IS NO ABOVE GROUND EVIDENCE OR FOR WHICH NO ABOVE GROUND EVIDENCE WAS OBSERVED. THE EXACT LOCATIONS OF SAID EXISTING UNDERGROUND UTILITIES SHALL BE VERIFIED BY THE CONTRACTOR PRIOR TO ANY AND ALL CONSTRUCTION.

CALL TOLL FREE
"811" OR 1-800-382-5544
– INDIANA UNDERGROUND –

GDI CONSTRUCTION
9775 Crosspoint Blvd
Suite 105
Indianapolis, IN 46256

317.567.6100

AMERICAN STRUCTUREPOINT INC.
9025 River Road, Suite 200 | Indianapolis, Indiana 46240
TEL 317.547.5580 | FAX 317.543.0270
www.structurepoint.com

I-65 SOUTH LOGISTICS CENTER LOT 1

81/89 Forest Road
Franklin, Indiana

JUSTIN ERIC OLA
REGISTERED
NOT FOR CONSTRUCTION
PRELIMINARY PLANS
STATE OF INDIANA
PROFESSIONAL ENGINEER

CERTIFIED BY

ISSUANCE INDEX
DATE:
12/03/2020
PROJECT PHASE:
CONSTRUCTION DOCUMENTS

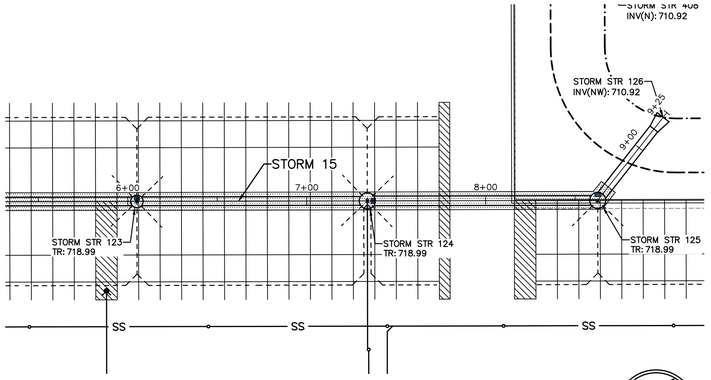
REVISION SCHEDULE		
NO.	DESCRIPTION	DATE

Project Number 2019.02798

STORM SEWER PLAN AND PROFILE

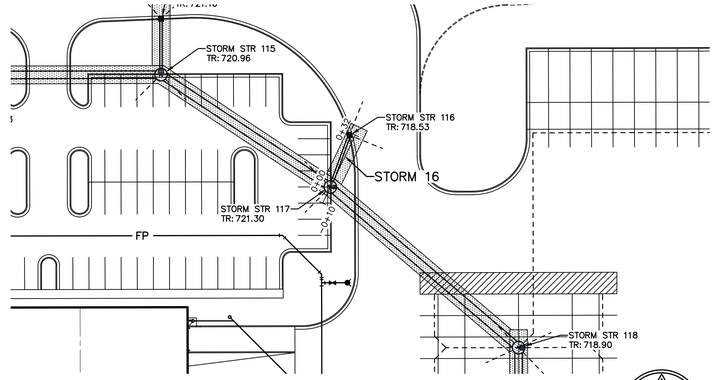
C429

PLOT DATE: 12/3/2020 11:58 AM
PLOT SCALE: 1:2.5849
EDIT DATE: 12/2/2020
EDITED BY: DWALLACE
DRAWING FILE: p:\2019\02798\cd_drawings\Civil\construction documents\2019.02798 CE C420 STM_PP.dwg



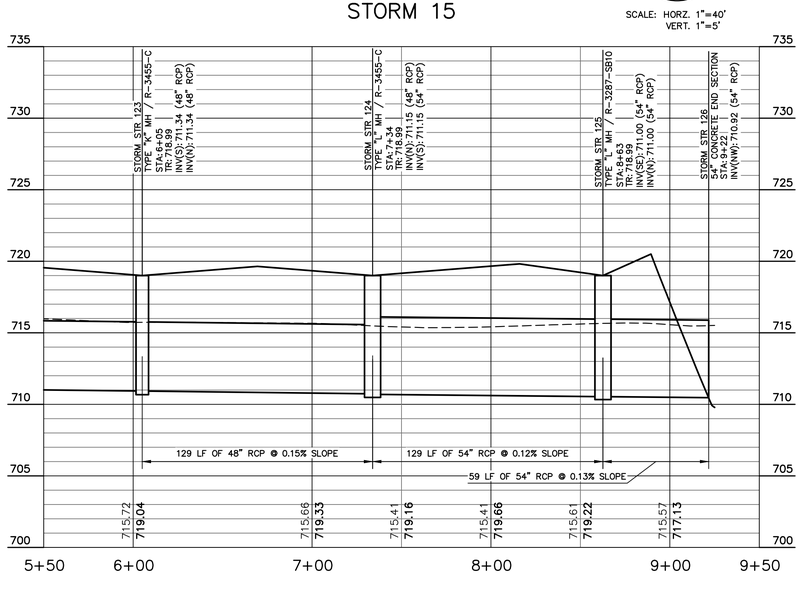
STORM 15

SCALE: HORZ. 1"=40'
VERT. 1"=5'

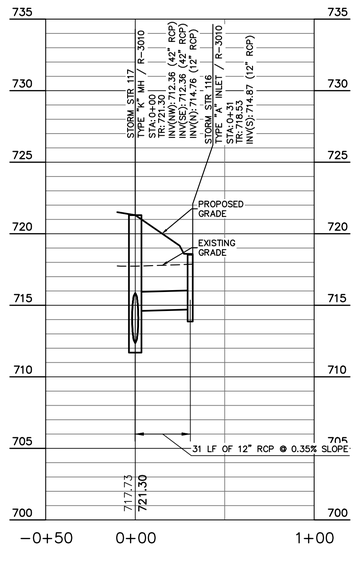


STORM 16

SCALE: HORZ. 1"=40'
VERT. 1"=5'



STORM 15



STORM 16

EXISTING LEGEND

BEEHIVE INLET	STAND PIPE
COMBINATION POLE	STUMP
ELECTRIC METER BOX	SUB SURFACE DRAIN
GAS MARKER SIGN	TEMPORARY BENCH MARK
GUY WIRE	TEST HOLE
HOSE BIB	TELEPHONE MARKER SIGN
INLET	TELEPHONE PEDESTAL
MAILBOX	TRANSFORMER
PINE	TREE
POST	VENT
POWER POLE	WELL
RIGHT OF WAY MONUMENT	
SIGN	

BENCHMARK DATA

(NAVD '88)

HELD OPUS SOLUTION 18-83940150 FOR BASE #1000 FOR INGCS JOHNSON COUNTY, IN

ASI TBM #32
CHISELED "X" ON SW BOLT OF FIRE HYDRANT EAST SIDE OF BARTRAM PARKWAY; ±300' SOUTH OF SR 44.
ELEV = 731.40

ASI TBM #50
MAG SPIKE SET IN WEST SIDE UTILITY POLE AT SW CORNER OF SR 44 AND COUNTY ROAD 525 E.
ELEV = 725.39

ASI TBM #51
MAG SPIKE SET IN SOUTH SIDE UTILITY POLE #40792 SOUTH SIDE OF SR 44 AND ±400' WEST OF MAILBOX #5557.
ELEV = 721.56

ASI TBM #52
CHISELED SQUARE ON WEST CORNER OF NW END OF CONCRETE HEADWALL OF BOX CULVERT UNDER SR 44 LOCATED ±600' SOUTHWEST OF COUNTY ROAD 600 E.
ELEV = 720.38

ASI TBM #53
MAG SPIKE SET IN WEST SIDE UTILITY POLE #06135 ON WEST SIDE OF OF COUNTY ROAD 525 E AND ±900' SOUTH OF SR 44.
ELEV = 735.00

ASI TBM #54
MAG SPIKE SET IN NW SIDE UTILITY POLE #12P1002 ON WEST SIDE OF COUNTY ROAD 525 E AND ±200' NORTH OF SOUTH PROPERTY LINE.
ELEV = 724.93

STORM SEWER NOTES:
1. ALL CASTINGS SHALL BE LABELED "DUMP NO WASTE – DRAINS TO WATERWAY"
2. MANNINGS COEFFICIENT
   n = 0.012
3. THE GRANULAR BACKFILL AREAS SHOWN IN PLAN VIEW ARE AN ESTIMATE PROVIDED BY THE ENGINEER. EXACT LIMITS OF GRANULAR BACKFILL ARE TO BE DETERMINED IN THE FIELD BY THE CONTRACTOR BASED ON TRENCH WIDTH AND AS DIRECTED BY THE AUTHORITY HAVING JURISDICTION.

GRANULAR BACKFILL REQUIRED

UTILITY CONTACTS

UTILITY	COMPANY	CONTACT	PHONE NO.
COMMUNICATIONS	CENTURYLINK (CTLCL)	BRUCE EMERICK	(574) 926-1247
ELECTRIC	JOHNSON COUNTY REMC	KEVIN SHELLEY	(317) 736-6174
GAS	VECTREN	JON EASTHAM	(765) 287-2119
SANITARY SEWER	CITY OF FRANKLIN, DPW	SALLY BROWN	(317) 736-3640
STORM SEWER	CITY OF FRANKLIN, DPW	SALLY BROWN	(317) 736-3640
WATER	INDIANA AMERICAN WATER	RYAN MOORE	(317) 885-2404

GENERAL NOTES:

1. CONTRACTOR SHALL PROTECT AND NOT DESTROY THE PROPERTY CORNER MONUMENTS DURING CONSTRUCTION.
2. CONTRACTOR TO VERIFY LOCATION, SIZE AND DEPTH OF EXISTING UTILITIES PRIOR TO COMMENCING ANY CONSTRUCTION. CONTACT ENGINEER IF VARIATION EXISTS.
3. SEE SHEET C002 GENERAL NOTES FOR MORE INFORMATION.

!! CAUTION !!

THE LOCATIONS OF ALL EXISTING UNDERGROUND UTILITIES SHOWN ON THIS PLAN ARE BASED UPON ABOVE GROUND EVIDENCE (including, but not limited to, manholes, inlets, valves, and marks made upon the ground by others) AND ARE SPECULATIVE IN NATURE. THERE MAY ALSO BE OTHER EXISTING UNDERGROUND UTILITIES FOR WHICH THERE IS NO ABOVE GROUND EVIDENCE OR FOR WHICH NO ABOVE GROUND EVIDENCE WAS OBSERVED. THE EXACT LOCATIONS OF SAID EXISTING UNDERGROUND UTILITIES SHALL BE VERIFIED BY THE CONTRACTOR PRIOR TO ANY AND ALL CONSTRUCTION.

CALL TOLL FREE
"811" OR 1-800-382-5544
– INDIANA UNDERGROUND –

GDI CONSTRUCTION
9775 Crosspoint Blvd
Suite 105
Indianapolis, IN 46256

317.567.6100

AMERICAN STRUCTUREPOINT INC.
9025 River Road, Suite 200 | Indianapolis, Indiana 46240
TEL 317.547.5580 | FAX 317.543.0270
www.structurepoint.com

I-65 SOUTH LOGISTICS CENTER LOT 1

81/89 Forest Road
Franklin, Indiana



CERTIFIED BY

ISSUANCE INDEX
DATE:
12/03/2020
PROJECT PHASE:
CONSTRUCTION DOCUMENTS

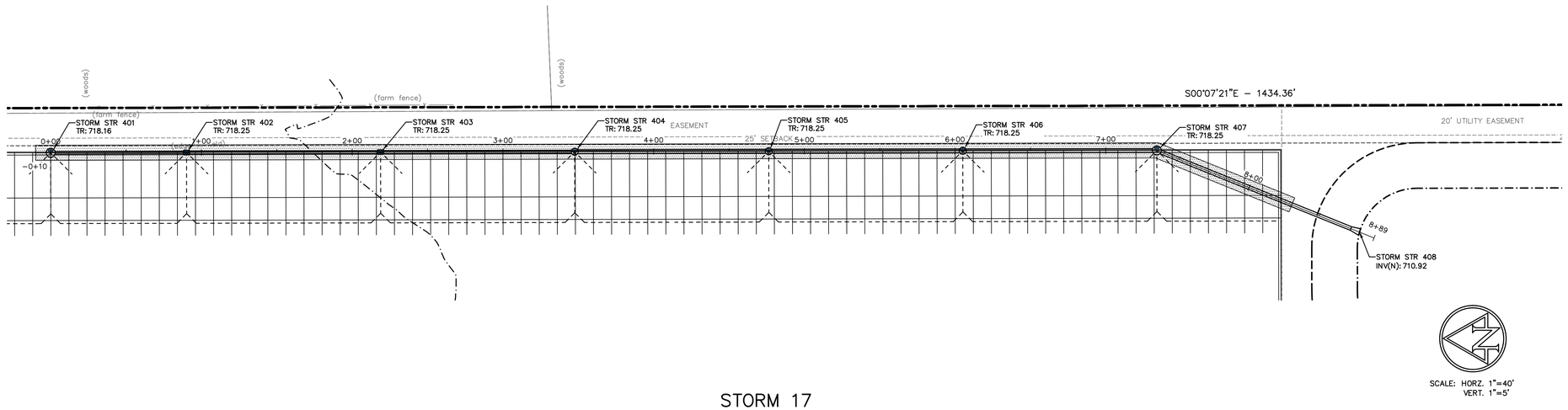
REVISION SCHEDULE		
NO.	DESCRIPTION	DATE

Project Number 2019.02798

STORM SEWER PLAN AND PROFILE

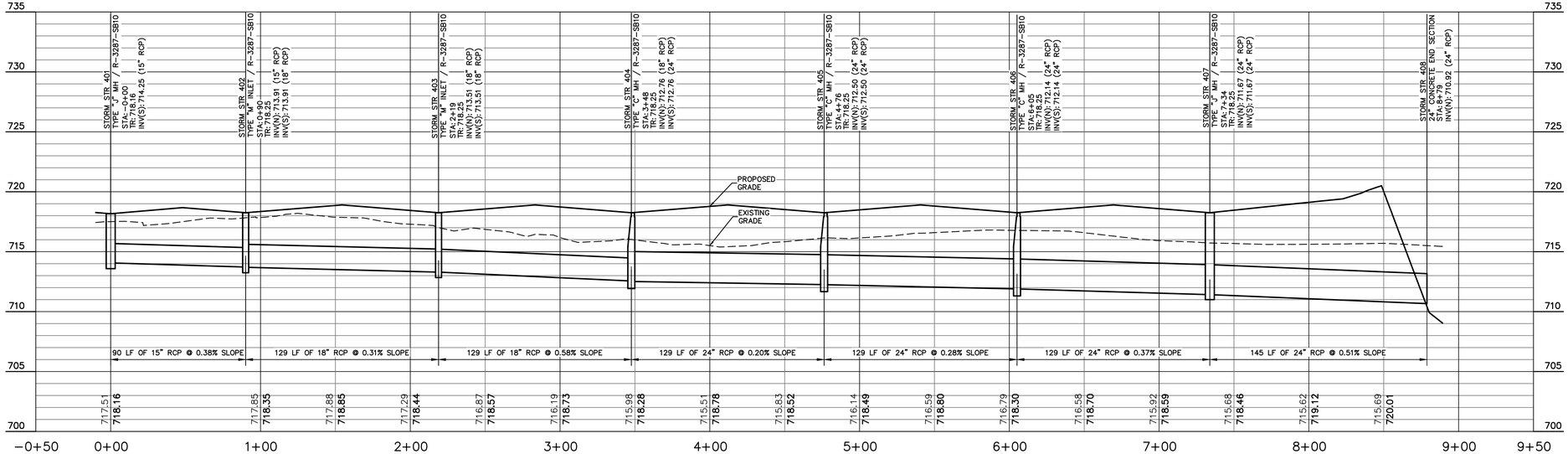
C430

PLOT DATE: 12/3/2020 11:59 AM
PLOT SCALE: 1:2.3849
EDIT DATE: 12/2/2020
EDITED BY: DWALLACE
DRAWING FILE: p:\2019\02798\d_drawings\Civil\construction documents\2019.02798 CE C420 STM PP.dwg



SCALE: HORZ. 1"=40'
VERT. 1"=5'

STORM 17



EXISTING LEGEND

BEEHIVE INLET	STAND PIPE
COMBINATION POLE	STUMP
ELECTRIC METER BOX	SUB SURFACE DRAIN
GAS MARKER SIGN	TEMPORARY BENCH MARK
GUY WIRE	TEST HOLE
HOSE BIB	TELEPHONE MARKER SIGN
INLET	TELEPHONE PEDESTAL
MAILBOX	TRANSFORMER
PINE	TREE
POST	VENT
POWER POLE	WELL
RIGHT OF WAY MONUMENT	
SIGN	

BENCHMARK DATA

(NAVD '88)

HELD OPUS SOLUTION 18–83940150 FOR BASE #1000 FOR INGCS JOHNSON COUNTY, IN

ASI TBM #32
CHISELED "X" ON SW BOLT OF FIRE HYDRANT EAST SIDE OF BARTRAM PARKWAY; ±300' SOUTH OF SR 44.
ELEV = 731.40

ASI TBM #50
MAG SPIKE SET IN WEST SIDE UTILITY POLE AT SW CORNER OF SR 44 AND COUNTY ROAD 525 E.
ELEV = 725.39

ASI TBM #51
MAG SPIKE SET IN SOUTH SIDE UTILITY POLE #40792 SOUTH SIDE OF SR 44 AND ±400' WEST OF MAILBOX #5557.
ELEV = 721.56

ASI TBM #52
CHISELED SQUARE ON WEST CORNER OF NW END OF CONCRETE HEADWALL OF BOX CULVERT UNDER SR 44 LOCATED ±600' SOUTHWEST OF COUNTY ROAD 600 E.
ELEV = 720.38

ASI TBM #53
MAG SPIKE SET IN WEST SIDE UTILITY POLE #06135 ON WEST SIDE OF OF COUNTY ROAD 525 E AND ±900' SOUTH OF SR 44.
ELEV = 735.00

ASI TBM #54
MAG SPIKE SET IN NW SIDE UTILITY POLE #12P1002 ON WEST SIDE OF COUNTY ROAD 525 E AND ±200' NORTH OF SOUTH PROPERTY LINE.
ELEV = 724.93

STORM SEWER NOTES:
1. ALL CASTINGS SHALL BE LABELED "DUMP NO WASTE – DRAINS TO WATERWAY"
2. MANNINGS COEFFICIENT
   n = 0.012
3. THE GRANULAR BACKFILL AREAS SHOWN IN PLAN VIEW ARE AN ESTIMATE PROVIDED BY THE ENGINEER. EXACT LIMITS OF GRANULAR BACKFILL ARE TO BE DETERMINED IN THE FIELD BY THE CONTRACTOR BASED ON TRENCH WIDTH AND AS DIRECTED BY THE AUTHORITY HAVING JURISDICTION.

GRANULAR BACKFILL REQUIRED

UTILITY CONTACTS

UTILITY	COMPANY	CONTACT	PHONE NO.
COMMUNICATIONS	CENTURYLINK (CTLCL)	BRUCE EMERICK	(574) 926–1247
ELECTRIC	JOHNSON COUNTY REMC	KEVIN SHELLEY	(317) 736–6174
GAS	VECTREN	JON EASTHAM	(765) 287–2119
SANITARY SEWER	CITY OF FRANKLIN, DPW	SALLY BROWN	(317) 736–3640
STORM SEWER	CITY OF FRANKLIN, DPW	SALLY BROWN	(317) 736–3640
WATER	INDIANA AMERICAN WATER	RYAN MOORE	(317) 885–2404

GENERAL NOTES:
1. CONTRACTOR SHALL PROTECT AND NOT DESTROY THE PROPERTY CORNER MONUMENTS DURING CONSTRUCTION.
2. CONTRACTOR TO VERIFY LOCATION, SIZE AND DEPTH OF EXISTING UTILITIES PRIOR TO COMMENCING ANY CONSTRUCTION. CONTACT ENGINEER IF VARIATION EXISTS.
3. SEE SHEET C002 GENERAL NOTES FOR MORE INFORMATION.

!! CAUTION !!

THE LOCATIONS OF ALL EXISTING UNDERGROUND UTILITIES SHOWN ON THIS PLAN ARE BASED UPON ABOVE GROUND EVIDENCE (including, but not limited to, manholes, inlets, valves, and marks made upon the ground by others) AND ARE SPECULATIVE IN NATURE. THERE MAY ALSO BE OTHER EXISTING UNDERGROUND UTILITIES FOR WHICH THERE IS NO ABOVE GROUND EVIDENCE OR FOR WHICH NO ABOVE GROUND EVIDENCE WAS OBSERVED. THE EXACT LOCATIONS OF SAID EXISTING UNDERGROUND UTILITIES SHALL BE VERIFIED BY THE CONTRACTOR PRIOR TO ANY AND ALL CONSTRUCTION.

CALL TOLL FREE
"811" OR 1–800–382–5544
– INDIANA UNDERGROUND –

GDI CONSTRUCTION
9775 Crosspoint Blvd
Suite 105
Indianapolis, IN 46256

317.567.6100

AMERICAN STRUCTUREPOINT INC.
9025 River Road, Suite 200 | Indianapolis, Indiana 46240
TEL 317.547.5580 | FAX 317.543.0270
www.structurepoint.com

I-65 SOUTH LOGISTICS CENTER LOT 1

81/89 Forest Road
Franklin, Indiana

JUSTIN ERIC OLIVER
REGISTERED
NO. 29100018
PROFESSIONAL ENGINEER
STATE OF INDIANA
NOT FOR CONSTRUCTION
SIGNED DATE: 12/3/2020

CERTIFIED BY

ISSUANCE INDEX
DATE:
12/03/2020
PROJECT PHASE:
CONSTRUCTION DOCUMENTS

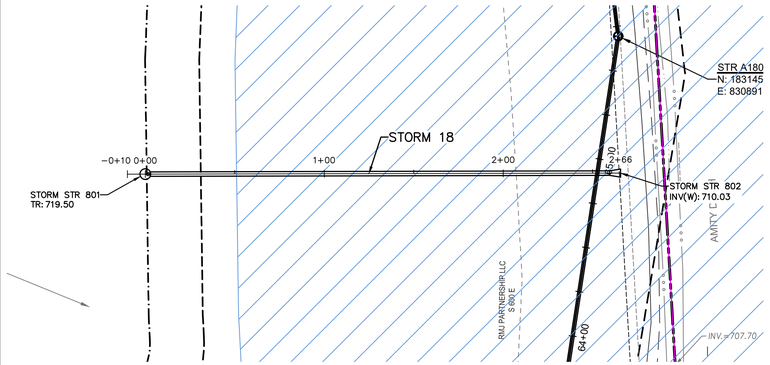
REVISION SCHEDULE		
NO.	DESCRIPTION	DATE

Project Number 2019.02798

STORM SEWER PLAN AND PROFILE

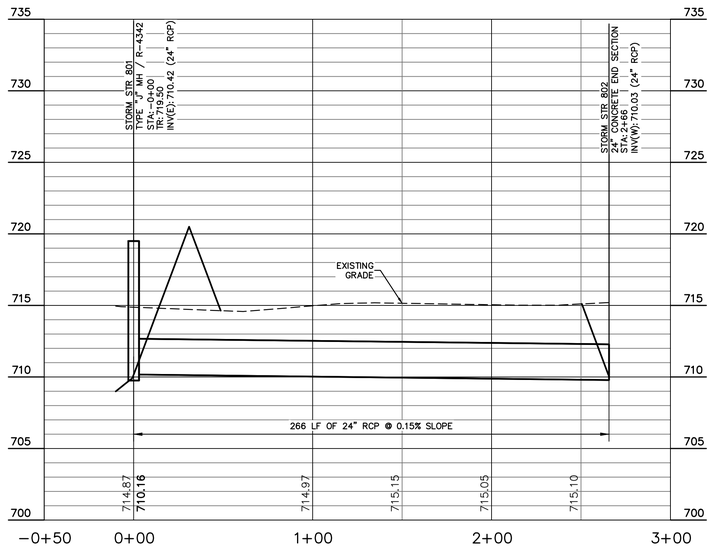
C431

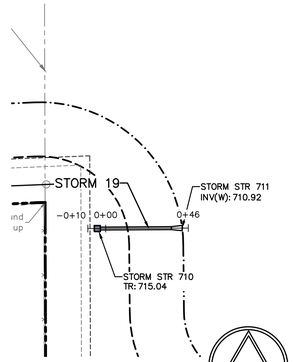
PLOT DATE: 12/3/2020 11:59 AM
PLOT SCALE: 1-2.5849
EDIT DATE: 12/2/2020
EDITED BY: DWALLACE
DRAWING FILE: p:\2019\02798\d drawings\Civil\construction documents\2019.02798 C2E C420 STM PP.dwg



SCALE: HORZ. 1"=40'
VERT. 1"=5'

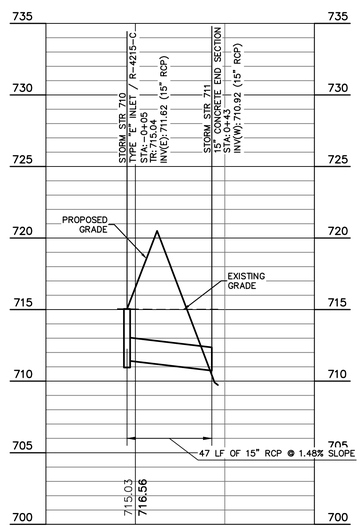
STORM 18





SCALE: HORZ. 1"=40'
VERT. 1"=5'

STORM 19



EXISTING LEGEND

BEEHIVE INLET	STAND PIPE
COMBINATION POLE	STUMP
ELECTRIC METER BOX	SUB SURFACE DRAIN
GAS MARKER SIGN	TEMPORARY BENCH MARK
GUY WIRE	TEST HOLE
HOSE BIB	TELEPHONE MARKER SIGN
INLET	TELEPHONE PEDESTAL
MAILBOX	TRANSFORMER
PINE	TREE
POST	VENT
POWER POLE	WELL
RIGHT OF WAY MONUMENT	
SIGN	

BENCHMARK DATA

(NAVD '88)

HELD OPUS SOLUTION 18−83940150 FOR BASE #1000 FOR INGCS JOHNSON COUNTY, IN

ASI TBM #32
CHISELED "X" ON SW BOLT OF FIRE HYDRANT EAST SIDE OF BARTRAM PARKWAY; ±300' SOUTH OF SR 44.
ELEV = 731.40

ASI TBM #50
MAG SPIKE SET IN WEST SIDE UTILITY POLE AT SW CORNER OF SR 44 AND COUNTY ROAD 525 E.
ELEV = 725.39

ASI TBM #51
MAG SPIKE SET IN SOUTH SIDE UTILITY POLE #40792 SOUTH SIDE OF SR 44 AND ±400' WEST OF MAILBOX #5557.
ELEV = 721.56

ASI TBM #52
CHISELED SQUARE ON WEST CORNER OF NW END OF CONCRETE HEADWALL OF BOX CULVERT UNDER SR 44 LOCATED ±600' SOUTHWEST OF COUNTY ROAD 600 E.
ELEV = 720.38

ASI TBM #53
MAG SPIKE SET IN WEST SIDE UTILITY POLE #06135 ON WEST SIDE OF OF COUNTY ROAD 525 E AND ±900' SOUTH OF SR 44.
ELEV = 735.00

ASI TBM #54
MAG SPIKE SET IN NW SIDE UTILITY POLE #12P1002 ON WEST SIDE OF COUNTY ROAD 525 E AND ±200' NORTH OF SOUTH PROPERTY LINE.
ELEV = 724.93

STORM SEWER NOTES:
1. ALL CASTINGS SHALL BE LABELED "DUMP NO WASTE − DRAINS TO WATERWAY"
2. MANNINGS COEFFICIENT n = 0.012
3. THE GRANULAR BACKFILL AREAS SHOWN IN PLAN VIEW ARE AN ESTIMATE PROVIDED BY THE ENGINEER. EXACT LIMITS OF GRANULAR BACKFILL ARE TO BE DETERMINED IN THE FIELD BY THE CONTRACTOR BASED ON TRENCH WIDTH AND AS DIRECTED BY THE AUTHORITY HAVING JURISDICTION.

GRANULAR BACKFILL REQUIRED

UTILITY CONTACTS

UTILITY	COMPANY	CONTACT	PHONE NO.
COMMUNICATIONS	CENTURYLINK (CTLCL)	BRUCE EMERICK	(574) 926−1247
ELECTRIC	JOHNSON COUNTY REMC	KEVIN SHELLEY	(317) 736−6174
GAS	VECTREN	JON EASTHAM	(765) 287−2119
SANITARY SEWER	CITY OF FRANKLIN, DPW	SALLY BROWN	(317) 736−3640
STORM SEWER	CITY OF FRANKLIN, DPW	SALLY BROWN	(317) 736−3640
WATER	INDIANA AMERICAN WATER	RYAN MOORE	(317) 885−2404

GENERAL NOTES:
1. CONTRACTOR SHALL PROTECT AND NOT DESTROY THE PROPERTY CORNER MONUMENTS DURING CONSTRUCTION.
2. CONTRACTOR TO VERIFY LOCATION, SIZE AND DEPTH OF EXISTING UTILITIES PRIOR TO COMMENCING ANY CONSTRUCTION. CONTACT ENGINEER IF VARIATION EXISTS.
3. SEE SHEET C002 GENERAL NOTES FOR MORE INFORMATION.

!! CAUTION !!

THE LOCATIONS OF ALL EXISTING UNDERGROUND UTILITIES SHOWN ON THIS PLAN ARE BASED UPON ABOVE GROUND EVIDENCE (including, but not limited to, manholes, inlets, valves, and marks made upon the ground by others) AND ARE SPECULATIVE IN NATURE. THERE MAY ALSO BE OTHER EXISTING UNDERGROUND UTILITIES FOR WHICH THERE IS NO ABOVE GROUND EVIDENCE OR FOR WHICH NO ABOVE GROUND EVIDENCE WAS OBSERVED. THE EXACT LOCATIONS OF SAID EXISTING UNDERGROUND UTILITIES SHALL BE VERIFIED BY THE CONTRACTOR PRIOR TO ANY AND ALL CONSTRUCTION.

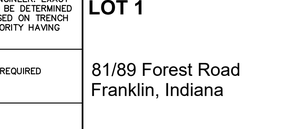
CALL TOLL FREE
"811" OR 1−800−382−5544
− INDIANA UNDERGROUND −

GDI CONSTRUCTION
9775 Crosspoint Blvd
Suite 105
Indianapolis, IN 46256
317.567.6100

AMERICAN STRUCTUREPOINT INC.
9025 River Road, Suite 200 | Indianapolis, Indiana 46240
TEL 317.547.5580 | FAX 317.543.0270
www.structurepoint.com

I-65 SOUTH LOGISTICS CENTER LOT 1

81/89 Forest Road
Franklin, Indiana



CERTIFIED BY

ISSUANCE INDEX
DATE:
12/03/2020
PROJECT PHASE:
CONSTRUCTION DOCUMENTS

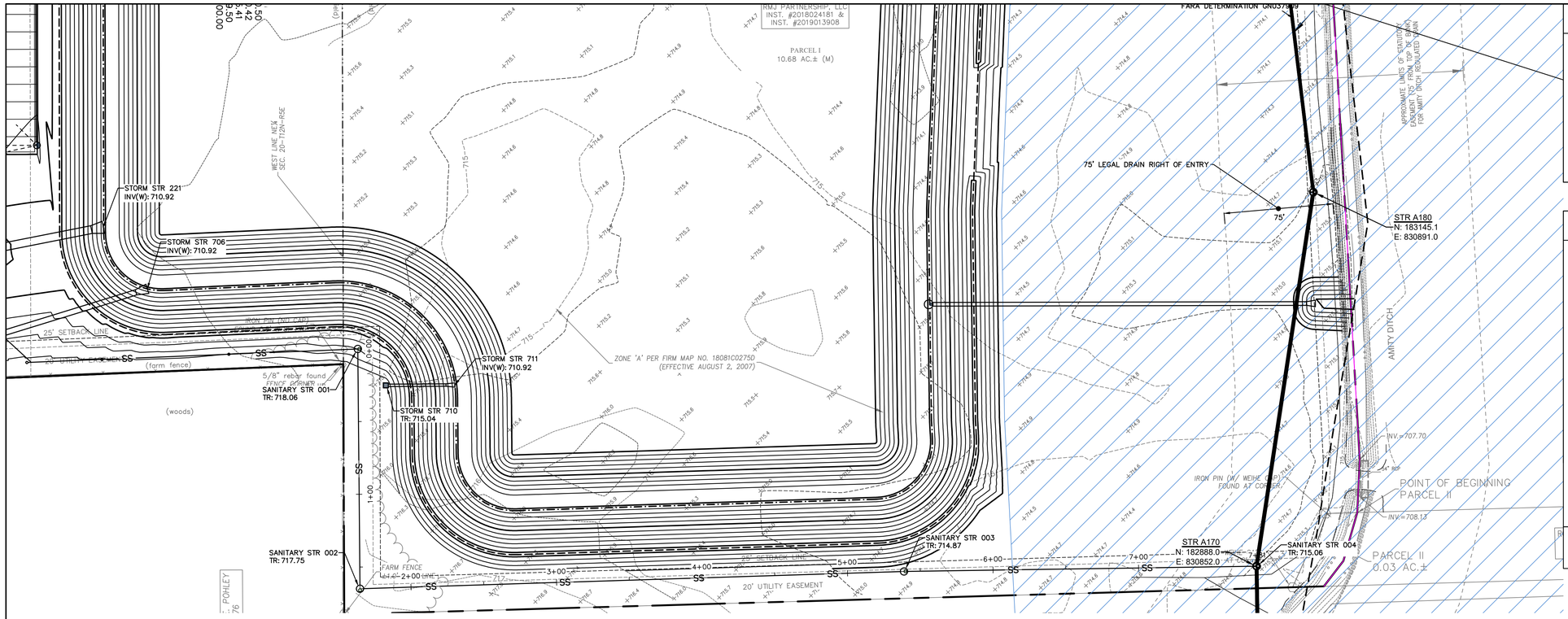
REVISION SCHEDULE		
NO.	DESCRIPTION	DATE

Project Number 2019.02798

STORM SEWER PLAN AND PROFILE

C432

PLOT DATE: 12/3/2020 1:28 PM
PLOT SCALE: 1-2.5849
EDIT DATE: 12/3/2020
EDITED BY: MRVING
DRAWING FILE: p:\2019\02798\a_drawings\Civil\construction documents\2019.02798 CE C420 STM PP.dwg



EXISTING LEGEND

BEEHIVE INLET	STAND PIPE
COMBINATION POLE	STUMP
ELECTRIC METER BOX	SUB SURFACE DRAIN
GAS MARKER SIGN	TEMPORARY BENCH MARK
GUY WIRE	TEST HOLE
HOSE BIB	TELEPHONE MARKER SIGN
INLET	TELEPHONE PEDESTAL
MAILBOX	TRANSFORMER
PINE	TREE
POST	VENT
POWER POLE	WELL
RIGHT OF WAY MONUMENT	
SIGN	

BENCHMARK DATA

(NAVD '88)

HELD OPUS SOLUTION 18-83940150 FOR BASE #1000 FOR INGCS JOHNSON COUNTY, IN

ASI TBM #32
CHISELED "X" ON SW BOLT OF FIRE HYDRANT EAST SIDE OF BARTRAM PARKWAY; ±300' SOUTH OF SR 44.
ELEV = 731.40

ASI TBM #50
MAG SPIKE SET IN WEST SIDE UTILITY POLE AT SW CORNER OF SR 44 AND COUNTY ROAD 525 E.
ELEV = 725.39

ASI TBM #51
MAG SPIKE SET IN SOUTH SIDE UTILITY POLE #40792 SOUTH SIDE OF SR 44 AND ±400' WEST OF MAILBOX #5557.
ELEV = 721.56

ASI TBM #52
CHISELED SQUARE ON WEST CORNER OF NW END OF CONCRETE HEADWALL OF BOX CULVERT UNDER SR 44 LOCATED ±600' SOUTHWEST OF COUNTY ROAD 600 E.
ELEV = 720.38

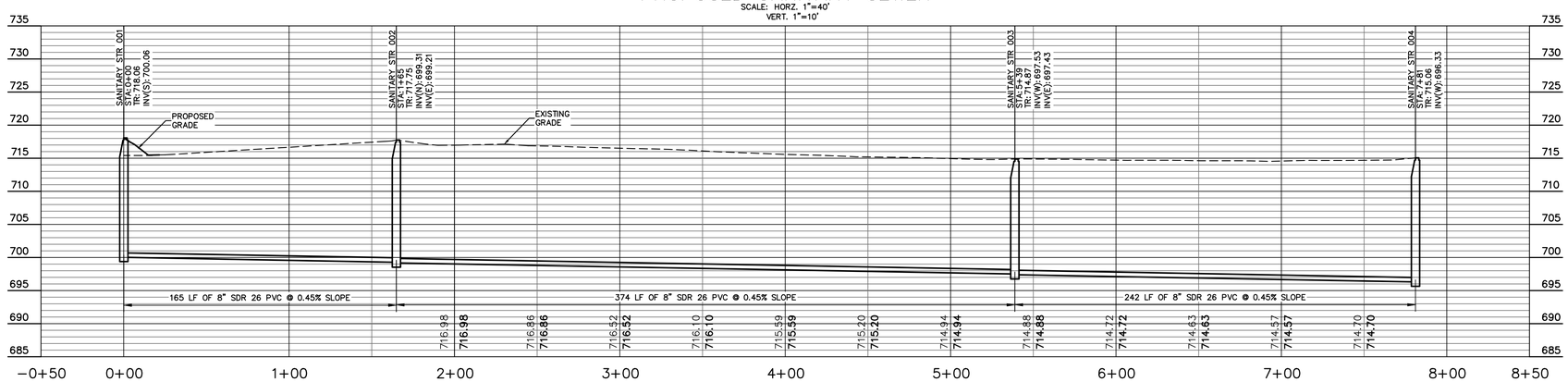
ASI TBM #53
MAG SPIKE SET IN WEST SIDE UTILITY POLE #06135 ON WEST SIDE OF OF COUNTY ROAD 525 E AND ±900' SOUTH OF SR 44.
ELEV = 735.00

ASI TBM #54
MAG SPIKE SET IN NW SIDE UTILITY POLE #12P1002 ON WEST SIDE OF COUNTY ROAD 525 E AND ±200' NORTH OF SOUTH PROPERTY LINE.
ELEV = 724.93

GRANULAR BACKFILL REQUIRED

PROPOSED SANITARY SEWER

SCALE: HORZ. 1"=40'
VERT. 1"=10'



UTILITY CONTACTS

UTILITY	COMPANY	CONTACT	PHONE NO.
COMMUNICATIONS	CENTURYLINK (CTLCL)	BRUCE EMERICK	(574) 926-1247
ELECTRIC	JOHNSON COUNTY REMC	KEVIN SHELLEY	(317) 736-6174
GAS	VECTREN	JON EASTHAM	(765) 287-2119
SANITARY SEWER	CITY OF FRANKLIN, DPW	SALLY BROWN	(317) 736-3640
STORM SEWER	CITY OF FRANKLIN, DPW	SALLY BROWN	(317) 736-3640
WATER	INDIANA AMERICAN WATER	RYAN MOORE	(317) 885-2404

GENERAL NOTES:

1. CONTRACTOR SHALL PROTECT AND NOT DESTROY THE PROPERTY CORNER MONUMENTS DURING CONSTRUCTION.
2. CONTRACTOR TO VERIFY LOCATION, SIZE AND DEPTH OF EXISTING UTILITIES PRIOR TO COMMENCING ANY CONSTRUCTION. CONTACT ENGINEER IF VARIATION EXISTS.
3. SEE SHEET C002 GENERAL NOTES FOR MORE INFORMATION.

!! CAUTION !!

THE LOCATIONS OF ALL EXISTING UNDERGROUND UTILITIES SHOWN ON THIS PLAN ARE BASED UPON ABOVE GROUND EVIDENCE (including, but not limited to, manholes, inlets, valves, and marks made upon the ground by others) AND ARE SPECULATIVE IN NATURE. THERE MAY ALSO BE OTHER EXISTING UNDERGROUND UTILITIES FOR WHICH THERE IS NO ABOVE GROUND EVIDENCE OR FOR WHICH NO ABOVE GROUND EVIDENCE WAS OBSERVED. THE EXACT LOCATIONS OF SAID EXISTING UNDERGROUND UTILITIES SHALL BE VERIFIED BY THE CONTRACTOR PRIOR TO ANY AND ALL CONSTRUCTION.

CALL TOLL FREE
"811" OR 1-800-382-5544
– INDIANA UNDERGROUND –

GDI CONSTRUCTION
9775 Crosspoint Blvd
Suite 105
Indianapolis, IN 46256
317.567.6100

AMERICAN STRUCTUREPOINT INC.
9025 River Road, Suite 200 | Indianapolis, Indiana 46240
TEL 317.547.5580 | FAX 317.543.0270
www.structurepoint.com

I-65 SOUTH LOGISTICS CENTER LOT 1

81/89 Forest Road
Franklin, Indiana

JUSTIN E. OLDS
REGISTERED
NO.
PE10700028
STATE OF INDIANA
PROFESSIONAL ENGINEER
DO NOT USE FOR CONSTRUCTION

CERTIFIED BY

ISSUANCE INDEX
DATE:
12/03/2020
PROJECT PHASE:
CONSTRUCTION DOCUMENTS

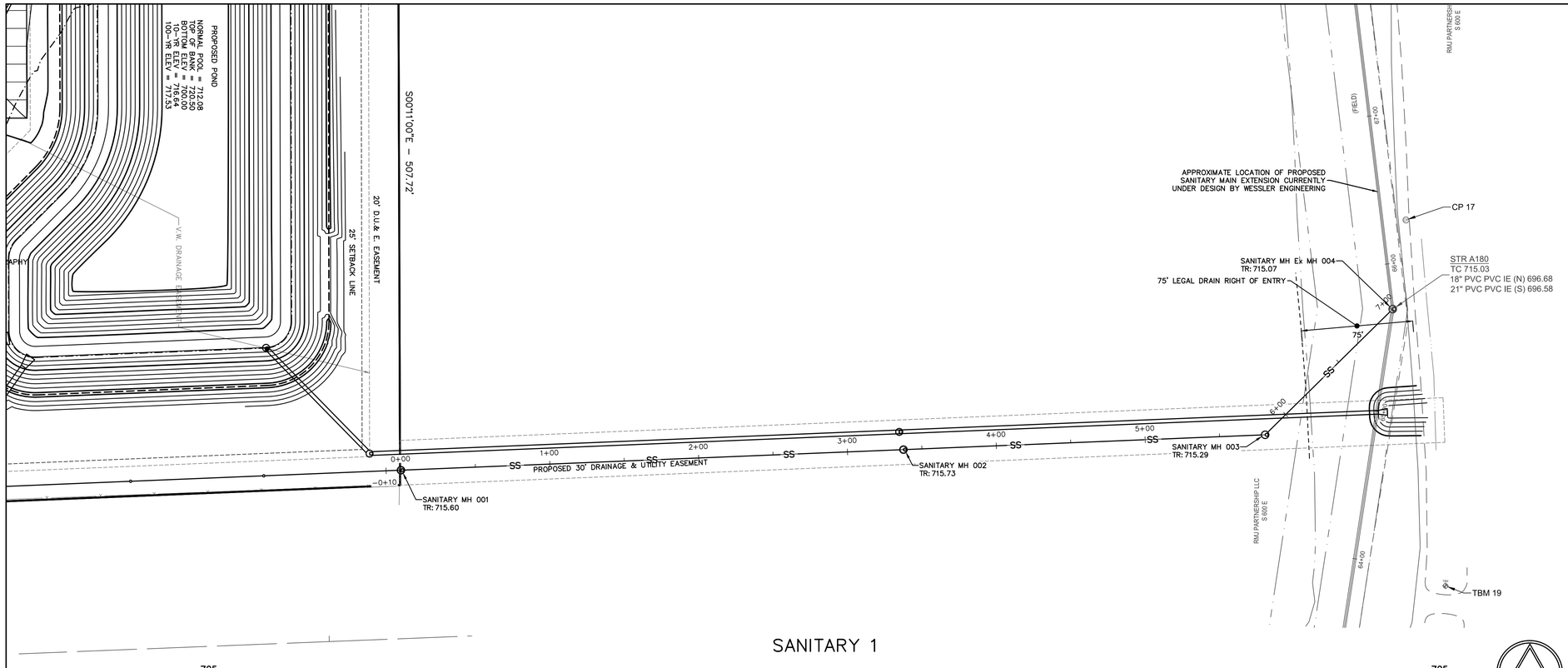
REVISION SCHEDULE		
NO.	DESCRIPTION	DATE

Project Number 2019.02798

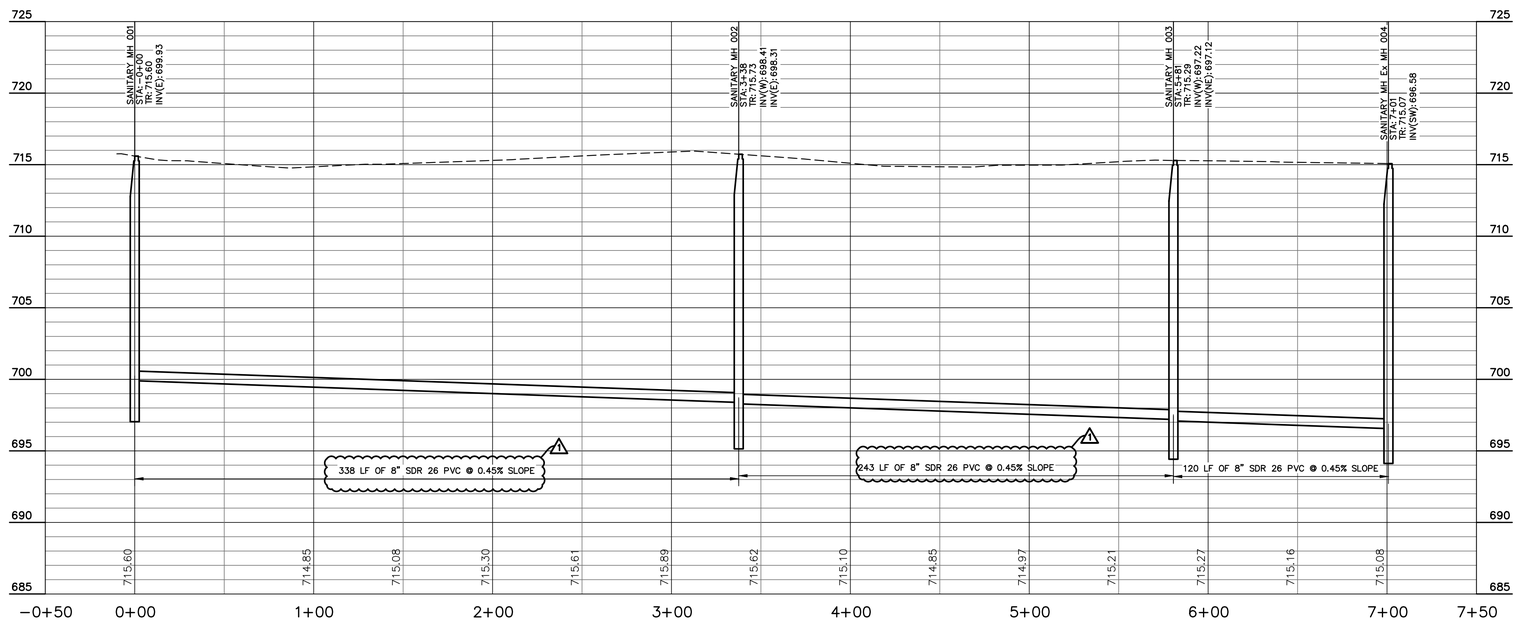
SANITARY SEWER PLAN & PROFILE

C450

PLOT DATE: 12/3/2020 12:00 PM
PLOT SCALE: 1:2.5849
EDIT DATE: 12/3/2020
EDITED BY: MRVING
DRAWING FILE: p:\2019\02798\d. drawings\Civil\construction documents\2019.02798 CE C450 SAN_PP.dwg



SANITARY 1



SCALE: HORZ. 1"=40'
VERT. 1"=5'

EXISTING LEGEND

BEEHIVE INLET	STAND PIPE
COMBINATION POLE	STUMP
ELECTRIC METER BOX	SUB SURFACE DRAIN
GAS MARKER SIGN	TEMPORARY BENCH MARK
GUY WIRE	TEST HOLE
HOSE BIB	TELEPHONE MARKER SIGN
INLET	TELEPHONE PEDESTAL
MAILBOX	TRANSFORMER
PINE	TREE
POST	VENT
POWER POLE	WELL
RIGHT OF WAY MONUMENT	
SIGN	

BENCHMARK DATA

(NAVD '88)

HELD OPUS SOLUTION 18-83940150 FOR BASE #1000 FOR INGCS JOHNSON COUNTY, IN

ASI TBM #32
CHISELED "X" ON SW BOLT OF FIRE HYDRANT EAST SIDE OF BARTRAM PARKWAY; ±300' SOUTH OF SR 44.
ELEV = 731.40

ASI TBM #50
MAG SPIKE SET IN WEST SIDE UTILITY POLE AT SW CORNER OF SR 44 AND COUNTY ROAD 525 E.
ELEV = 725.39

ASI TBM #51
MAG SPIKE SET IN SOUTH SIDE UTILITY POLE #40792 SOUTH SIDE OF SR 44 AND ±400' WEST OF MAILBOX #5557.
ELEV = 721.56

ASI TBM #52
CHISELED SQUARE ON WEST CORNER OF NW END OF CONCRETE HEADWALL OF BOX CULVERT UNDER SR 44 LOCATED ±600' SOUTHWEST OF COUNTY ROAD 600 E.
ELEV = 720.38

ASI TBM #53
MAG SPIKE SET IN WEST SIDE UTILITY POLE #06135 ON WEST SIDE OF OF COUNTY ROAD 525 E AND ±900' SOUTH OF SR 44.
ELEV = 735.00

ASI TBM #54
MAG SPIKE SET IN NW SIDE UTILITY POLE #12P1002 ON WEST SIDE OF COUNTY ROAD 525 E AND ±200' NORTH OF SOUTH PROPERTY LINE.
ELEV = 724.93

STORM SEWER NOTES:
1. ALL CASTINGS SHALL BE LABELED "DUMP NO WASTE – DRAINS TO WATERWAY"
2. MANNINGS COEFFICIENT n = 0.012
3. THE GRANULAR BACKFILL AREAS SHOWN IN PLAN VIEW ARE AN ESTIMATE PROVIDED BY THE ENGINEER. EXACT LIMITS OF GRANULAR BACKFILL ARE TO BE DETERMINED IN THE FIELD BY THE CONTRACTOR BASED ON TRENCH WIDTH AND AS DIRECTED BY THE AUTHORITY HAVING JURISDICTION.

GRANULAR BACKFILL REQUIRED

UTILITY CONTACTS

UTILITY	COMPANY	CONTACT	PHONE NO.
COMMUNICATIONS	CENTURYLINK (CTLCL)	BRUCE EMERICK	(574) 926-1247
ELECTRIC	JOHNSON COUNTY REMC	KEVIN SHELLEY	(317) 736-6174
GAS	VECTREN	JON EASTHAM	(765) 287-2119
SANITARY SEWER	CITY OF FRANKLIN, DPW	SALLY BROWN	(317) 736-3640
STORM SEWER	CITY OF FRANKLIN, DPW	SALLY BROWN	(317) 736-3640
WATER	INDIANA AMERICAN WATER	RYAN MOORE	(317) 885-2404

GENERAL NOTES:
1. CONTRACTOR SHALL PROTECT AND NOT DESTROY THE PROPERTY CORNER MONUMENTS DURING CONSTRUCTION.
2. CONTRACTOR TO VERIFY LOCATION, SIZE AND DEPTH OF EXISTING UTILITIES PRIOR TO COMMENCING ANY CONSTRUCTION. CONTACT ENGINEER IF VARIATION EXISTS.
3. SEE SHEET C002 GENERAL NOTES FOR MORE INFORMATION.

!! CAUTION !!

THE LOCATIONS OF ALL EXISTING UNDERGROUND UTILITIES SHOWN ON THIS PLAN ARE BASED UPON ABOVE GROUND EVIDENCE (including, but not limited to, manholes, inlets, valves, and marks made upon the ground by others) AND ARE SPECULATIVE IN NATURE. THERE MAY ALSO BE OTHER EXISTING UNDERGROUND UTILITIES FOR WHICH THERE IS NO ABOVE GROUND EVIDENCE OR FOR WHICH NO ABOVE GROUND EVIDENCE WAS OBSERVED. THE EXACT LOCATIONS OF SAID EXISTING UNDERGROUND UTILITIES SHALL BE VERIFIED BY THE CONTRACTOR PRIOR TO ANY AND ALL CONSTRUCTION.

CALL TOLL FREE
"811" OR 1-800-382-5544
– INDIANA UNDERGROUND –

GDI CONSTRUCTION
9775 Crosspoint Blvd
Suite 105
Indianapolis, IN 46256
317.567.6100

AMERICAN STRUCTUREPOINT INC.
9025 River Road, Suite 200 | Indianapolis, Indiana 46240
TEL 317.547.5580 | FAX 317.543.0270
www.structurepoint.com

I-65 SOUTH LOGISTICS CENTER LOT 1

81/89 Forest Road
Franklin, Indiana

JUSTIN ERIC OLASHUK
REGISTERED
NO. PE10300811
STATE OF INDIANA
PROFESSIONAL ENGINEER
APPROVED FOR CONSTRUCTION
NOT FOR CONSTRUCTION

CERTIFIED BY

ISSUANCE INDEX
DATE:
3/2/2020
PROJECT PHASE:
CONSTRUCTION DOCUMENTS

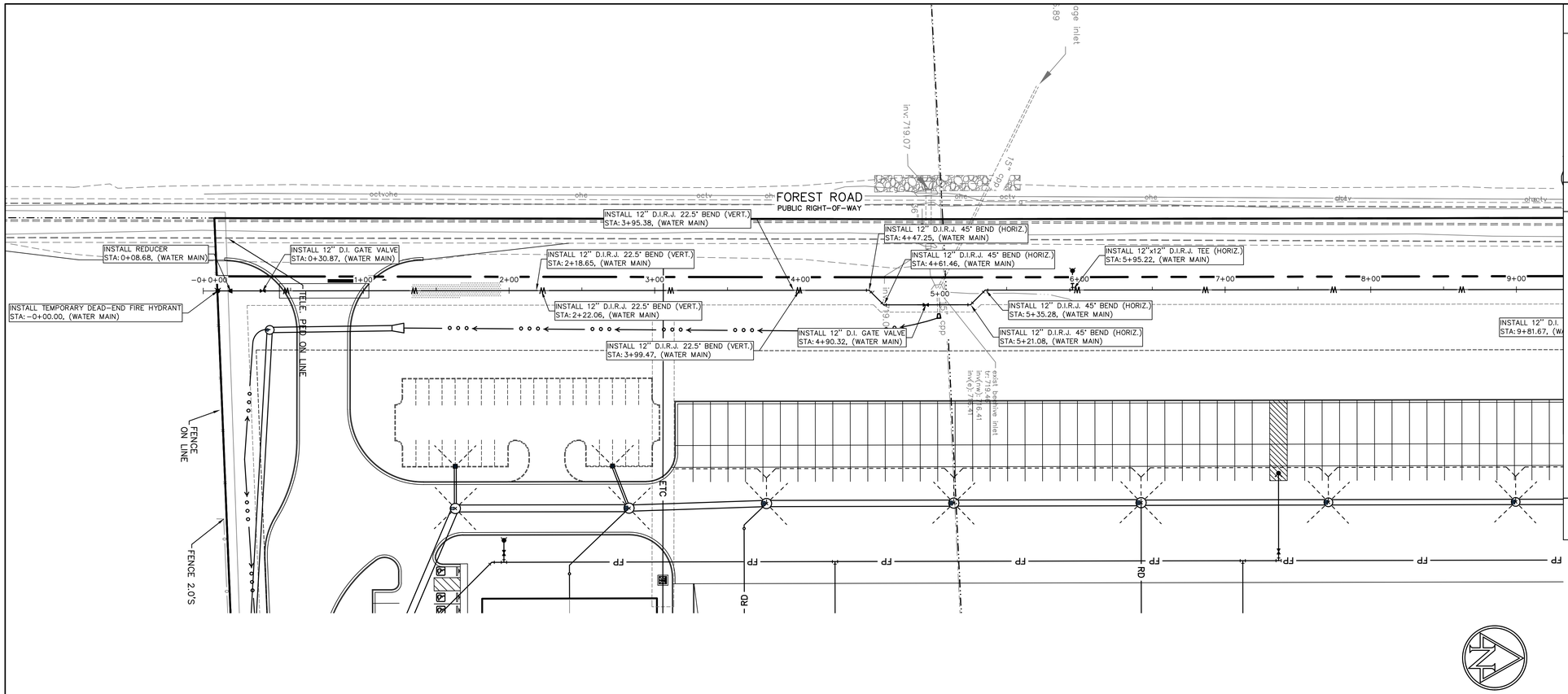
REVISION SCHEDULE		
NO.	DESCRIPTION	DATE
1	DPW COMMENTS	2/25/20
2	SITE REVISIONS	3/13/20
3	IAW COMMENTS	4/20/20

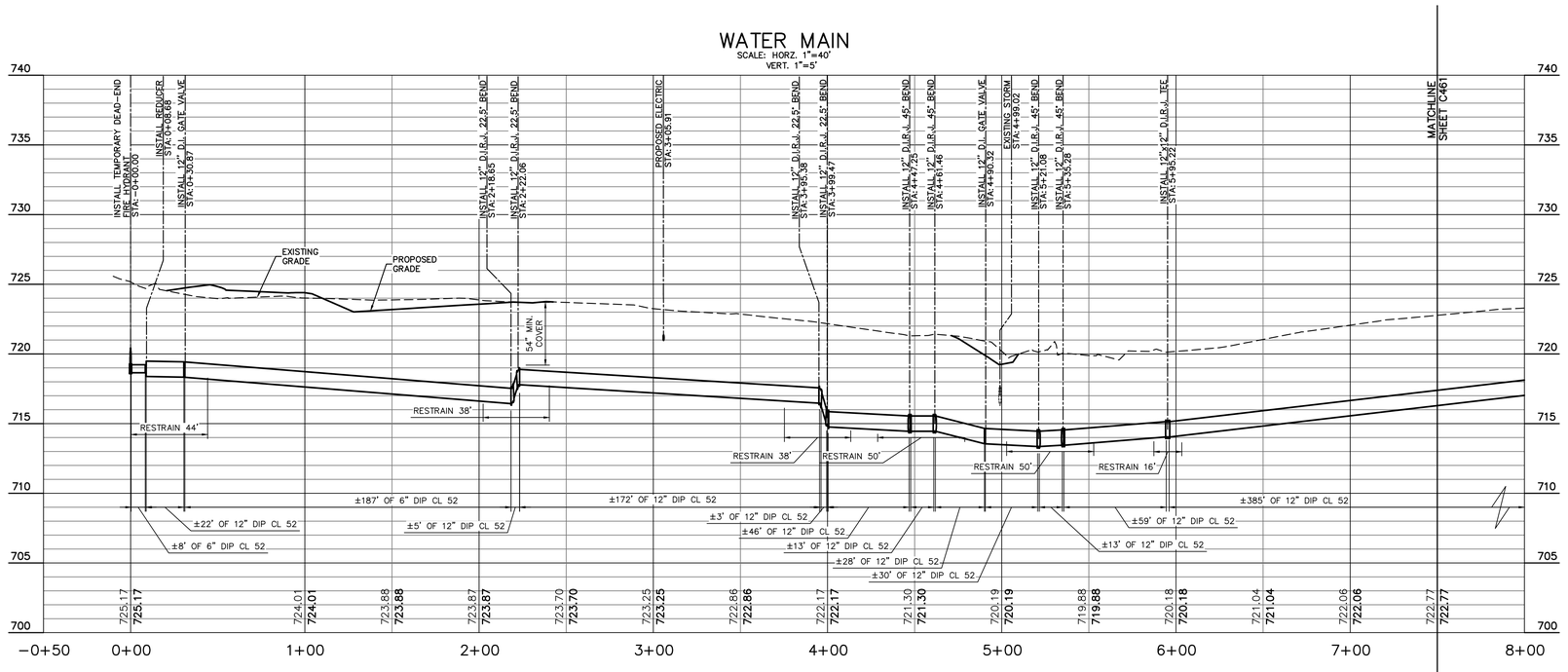
Project Number 2019.02798

SANITARY SEWER PLAN AND PROFILE

C450

PLOT DATE: 8/28/2020 2:18 PM
PLOT SCALE: 1:2.5849
EDIT DATE: 4/22/2020
EDITED BY: JOLASHUK
DRAWING FILE P:\2019\02798\D Drawings\Civil\Construction Documents\2019.02798 CE C450 SAN PP.dwg





EXISTING LEGEND

BEEHIVE INLET	STAND PIPE
COMBINATION POLE	STUMP
ELECTRIC METER BOX	SUB SURFACE DRAIN
GAS MARKER SIGN	TEMPORARY BENCH MARK
GUY WIRE	TEST HOLE
HOSE BIB	TELEPHONE MARKER SIGN
INLET	TELEPHONE PEDESTAL
MAILBOX	TRANSFORMER
PINE	TREE
POST	VENT
POWER POLE	WELL
RIGHT OF WAY MONUMENT	
SIGN	

BENCHMARK DATA

(NAVD '88)

HELD OPUS SOLUTION 18-83940150 FOR BASE #1000 FOR INGCS JOHNSON COUNTY, IN

ASI TBM #32
CHISELED "X" ON SW BOLT OF FIRE HYDRANT EAST SIDE OF BARTRAM PARKWAY; ±300' SOUTH OF SR 44.
ELEV = 731.40

ASI TBM #50
MAG SPIKE SET IN WEST SIDE UTILITY POLE AT SW CORNER OF SR 44 AND COUNTY ROAD 525 E.
ELEV = 725.39

ASI TBM #51
MAG SPIKE SET IN SOUTH SIDE UTILITY POLE #40792 SOUTH SIDE OF SR 44 AND ±400' WEST OF MAILBOX #5557.
ELEV = 721.56

ASI TBM #52
CHISELED SQUARE ON WEST CORNER OF NW END OF CONCRETE HEADWALL OF BOX CULVERT UNDER SR 44 LOCATED ±600' SOUTHWEST OF COUNTY ROAD 600 E.
ELEV = 720.38

ASI TBM #53
MAG SPIKE SET IN WEST SIDE UTILITY POLE #06135 ON WEST SIDE OF OF COUNTY ROAD 525 E AND ±900' SOUTH OF SR 44.
ELEV = 735.00

ASI TBM #54
MAG SPIKE SET IN NW SIDE UTILITY POLE #12P1002 ON WEST SIDE OF COUNTY ROAD 525 E AND ±200' NORTH OF SOUTH PROPERTY LINE.
ELEV = 724.93

GRANULAR BACKFILL REQUIRED

UTILITY CONTACTS

UTILITY	COMPANY	CONTACT	PHONE NO.
COMMUNICATIONS	CENTURYLINK (CTLCL)	BRUCE EMERICK	(574) 926-1247
ELECTRIC	JOHNSON COUNTY REMC	KEVIN SHELLEY	(317) 736-6174
GAS	VECTREN	JON EASTHAM	(765) 287-2119
SANITARY SEWER	CITY OF FRANKLIN, DPW	SALLY BROWN	(317) 736-3640
STORM SEWER	CITY OF FRANKLIN, DPW	SALLY BROWN	(317) 736-3640
WATER	INDIANA AMERICAN WATER	RYAN MOORE	(317) 885-2404

GENERAL NOTES:

1. CONTRACTOR SHALL PROTECT AND NOT DESTROY THE PROPERTY CORNER MONUMENTS DURING CONSTRUCTION.
2. CONTRACTOR TO VERIFY LOCATION, SIZE AND DEPTH OF EXISTING UTILITIES PRIOR TO COMMENCING ANY CONSTRUCTION. CONTACT ENGINEER IF VARIATION EXISTS.
3. SEE SHEET C002 GENERAL NOTES FOR MORE INFORMATION.

!! CAUTION !!

THE LOCATIONS OF ALL EXISTING UNDERGROUND UTILITIES SHOWN ON THIS PLAN ARE BASED UPON ABOVE GROUND EVIDENCE (including, but not limited to, manholes, inlets, valves, and marks made upon the ground by others) AND ARE SPECULATIVE IN NATURE. THERE MAY ALSO BE OTHER EXISTING UNDERGROUND UTILITIES FOR WHICH THERE IS NO ABOVE GROUND EVIDENCE OR FOR WHICH NO ABOVE GROUND EVIDENCE WAS OBSERVED. THE EXACT LOCATIONS OF SAID EXISTING UNDERGROUND UTILITIES SHALL BE VERIFIED BY THE CONTRACTOR PRIOR TO ANY AND ALL CONSTRUCTION.

CALL TOLL FREE
"811" OR 1-800-382-5544
- INDIANA UNDERGROUND -

GDI CONSTRUCTION
9775 Crosspoint Blvd
Suite 105
Indianapolis, IN 46256
317.567.6100

AMERICAN STRUCTUREPOINT INC.
9025 River Road, Suite 200 | Indianapolis, Indiana 46240
TEL 317.547.5580 | FAX 317.543.0270
www.structurepoint.com

I-65 SOUTH LOGISTICS CENTER LOT 1

81/89 Forest Road
Franklin, Indiana

JUSTIN E. OLDS
REGISTERED
NOT FOR CONSTRUCTION
PE10702008
STATE OF INDIANA
PROFESSIONAL ENGINEER
DRAWINGS MAY BE SIGNED AND SEALED FOR PERMITTING PURPOSES ONLY

CERTIFIED BY

ISSUANCE INDEX
DATE:
12/03/2020
PROJECT PHASE:
CONSTRUCTION DOCUMENTS

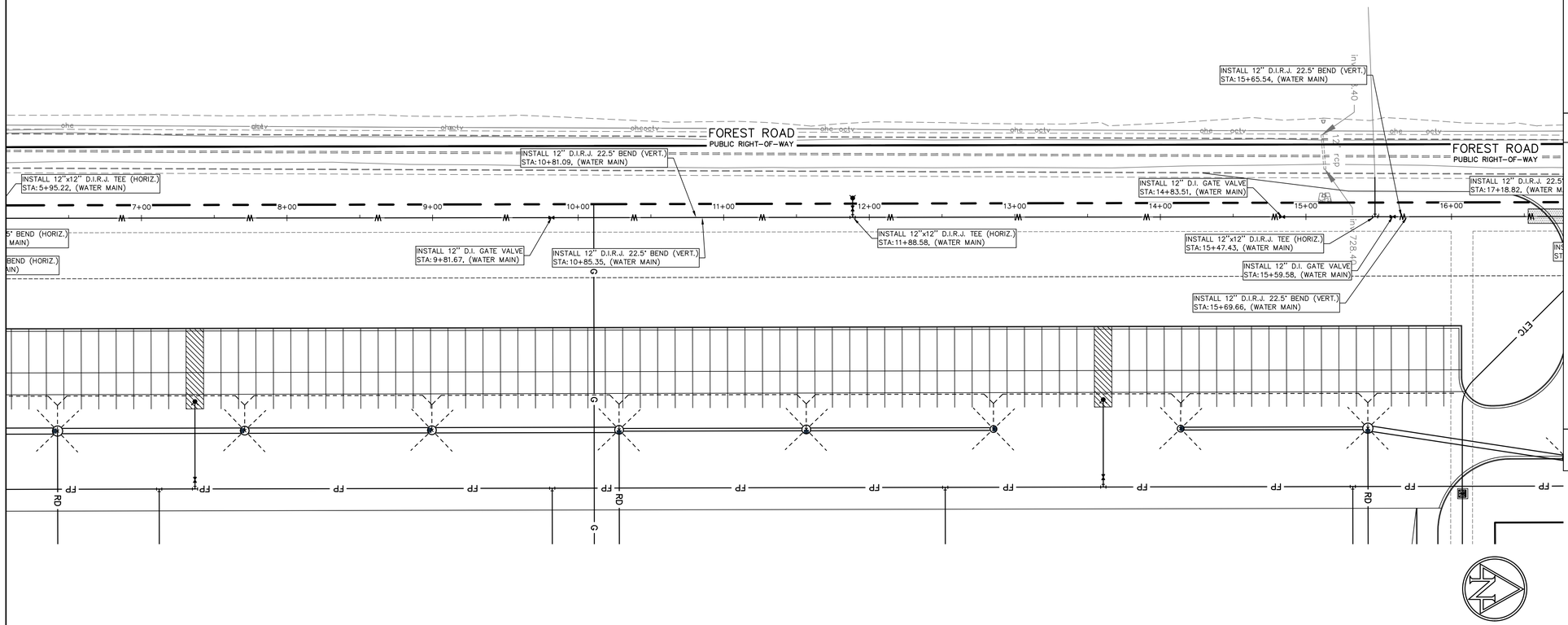
REVISION SCHEDULE		
NO.	DESCRIPTION	DATE

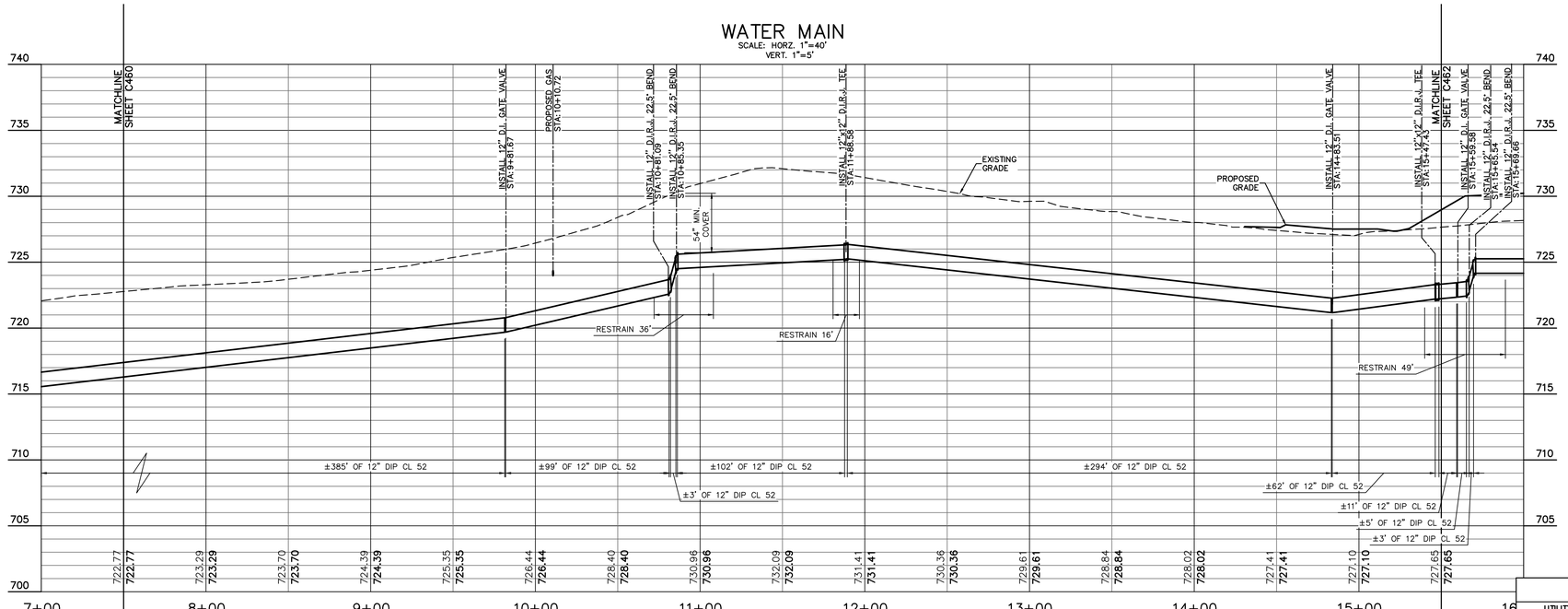
Project Number 2019.02798

WATER MAIN PLAN & PROFILE

C460

PLOT DATE: 12/3/2020 12:00 PM
PLOT SCALE: 1:2.5849
EDIT DATE: 12/2/2020 EDITED BY: MRVING
DRAWING FILE: p:\2019\02798\d. drawings\Civil\construction documents\2019.02798 CE C460 WATER PP .dwg





EXISTING LEGEND

BEEHIVE INLET	STAND PIPE
COMBINATION POLE	STUMP
ELECTRIC METER BOX	SUB SURFACE DRAIN
GAS MARKER SIGN	TEMPORARY BENCH MARK
GUY WIRE	TEST HOLE
HOSE BIB	TELEPHONE MARKER SIGN
INLET	TELEPHONE PEDESTAL
MAILBOX	TRANSFORMER
PINE	TREE
POST	VENT
POWER POLE	WELL
RIGHT OF WAY MONUMENT	
SIGN	

BENCHMARK DATA

(NAVD '88)

HELD OPUS SOLUTION 18-83940150 FOR BASE #1000 FOR INGCS JOHNSON COUNTY, IN

ASI TBM #32
CHISELED "X" ON SW BOLT OF FIRE HYDRANT EAST SIDE OF BARTRAM PARKWAY; ±300' SOUTH OF SR 44.
ELEV = 731.40

ASI TBM #50
MAG SPIKE SET IN WEST SIDE UTILITY POLE AT SW CORNER OF SR 44 AND COUNTY ROAD 525 E.
ELEV = 725.39

ASI TBM #51
MAG SPIKE SET IN SOUTH SIDE UTILITY POLE #40792 SOUTH SIDE OF SR 44 AND ±400' WEST OF MAILBOX #5557.
ELEV = 721.56

ASI TBM #52
CHISELED SQUARE ON WEST CORNER OF NW END OF CONCRETE HEADWALL OF BOX CULVERT UNDER SR 44 LOCATED ±600' SOUTHWEST OF COUNTY ROAD 600 E.
ELEV = 720.38

ASI TBM #53
MAG SPIKE SET IN WEST SIDE UTILITY POLE #06135 ON WEST SIDE OF OF COUNTY ROAD 525 E AND ±900' SOUTH OF SR 44.
ELEV = 735.00

ASI TBM #54
MAG SPIKE SET IN NW SIDE UTILITY POLE #12P1002 ON WEST SIDE OF COUNTY ROAD 525 E AND ±200' NORTH OF SOUTH PROPERTY LINE.
ELEV = 724.93

GRANULAR BACKFILL REQUIRED

GENERAL NOTES:

1. CONTRACTOR SHALL PROTECT AND NOT DESTROY THE PROPERTY CORNER MONUMENTS DURING CONSTRUCTION.
2. CONTRACTOR TO VERIFY LOCATION, SIZE AND DEPTH OF EXISTING UTILITIES PRIOR TO COMMENCING ANY CONSTRUCTION. CONTACT ENGINEER IF VARIATION EXISTS.
3. SEE SHEET C002 GENERAL NOTES FOR MORE INFORMATION.

!! CAUTION !!

THE LOCATIONS OF ALL EXISTING UNDERGROUND UTILITIES SHOWN ON THIS PLAN ARE BASED UPON ABOVE GROUND EVIDENCE (including, but not limited to, manholes, inlets, valves, and marks made upon the ground by others) AND ARE SPECULATIVE IN NATURE. THERE MAY ALSO BE OTHER EXISTING UNDERGROUND UTILITIES FOR WHICH THERE IS NO ABOVE GROUND EVIDENCE OR FOR WHICH NO ABOVE GROUND EVIDENCE WAS OBSERVED. THE EXACT LOCATIONS OF SAID EXISTING UNDERGROUND UTILITIES SHALL BE VERIFIED BY THE CONTRACTOR PRIOR TO ANY AND ALL CONSTRUCTION.

CALL TOLL FREE
"811" OR 1-800-382-5544
- INDIANA UNDERGROUND -

UTILITY CONTACTS

UTILITY	COMPANY	CONTACT	PHONE NO.
COMMUNICATIONS	CENTURYLINK (CTLCL)	BRUCE EMERICK	(574) 926-1247
ELECTRIC	JOHNSON COUNTY REMC	KEVIN SHELLEY	(317) 736-6174
GAS	VECTREN	JON EASTHAM	(765) 287-2119
SANITARY SEWER	CITY OF FRANKLIN, DPW	SALLY BROWN	(317) 736-3640
STORM SEWER	CITY OF FRANKLIN, DPW	SALLY BROWN	(317) 736-3640
WATER	INDIANA AMERICAN WATER	RYAN MOORE	(317) 885-2404

GDI CONSTRUCTION
9775 Crosspoint Blvd
Suite 105
Indianapolis, IN 46256

317.567.6100

AMERICAN STRUCTUREPOINT INC.
9025 River Road, Suite 200 | Indianapolis, Indiana 46240
TEL 317.547.5580 | FAX 317.543.0270
www.structurepoint.com

I-65 SOUTH LOGISTICS CENTER LOT 1

81/89 Forest Road
Franklin, Indiana

CERTIFIED BY

ISSUANCE INDEX
DATE:
12/03/2020
PROJECT PHASE:
CONSTRUCTION DOCUMENTS

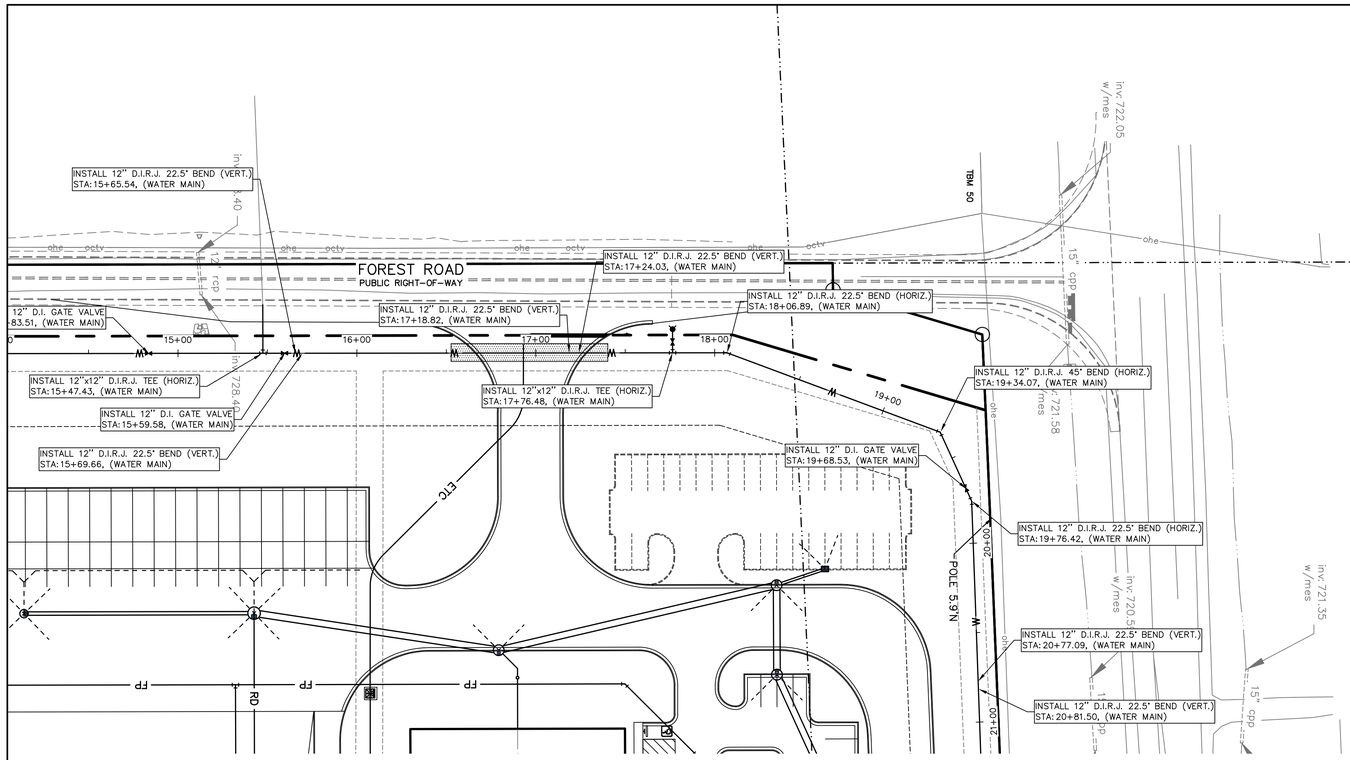
REVISION SCHEDULE		
NO.	DESCRIPTION	DATE

Project Number 2019.02798

WATER MAIN PLAN & PROFILE

C461

PLOT DATE: 12/3/2020 12:00 PM
PLOT SCALE: 1:2.5849
EDIT DATE: 12/2/2020
EDITED BY: MRVING
DRAWING FILE: p:\2019\02798\d_drawings\Civil\construction documents\2019.02798 CE C460 WATER_PIP .dwg



EXISTING LEGEND

BEEHIVE INLET	STAND PIPE
COMBINATION POLE	STUMP
ELECTRIC METER BOX	SUB SURFACE DRAIN
GAS MARKER SIGN	TEMPORARY BENCH MARK
GUY WIRE	TEST HOLE
HOSE BIB	TELEPHONE MARKER SIGN
INLET	TELEPHONE PEDESTAL
MAILBOX	TRANSFORMER
PINE	TREE
POST	VENT
POWER POLE	WELL
RIGHT OF WAY MONUMENT	
SIGN	

GRANULAR BACKFILL REQUIRED

BENCHMARK DATA

(NAVD '88)

HELD OPUS SOLUTION 18-83940150 FOR BASE #1000 FOR INGCS JOHNSON COUNTY, IN

ASI TBM #32
CHISELED "X" ON SW BOLT OF FIRE HYDRANT EAST SIDE OF BARTRAM PARKWAY; ±300' SOUTH OF SR 44.
ELEV = 731.40

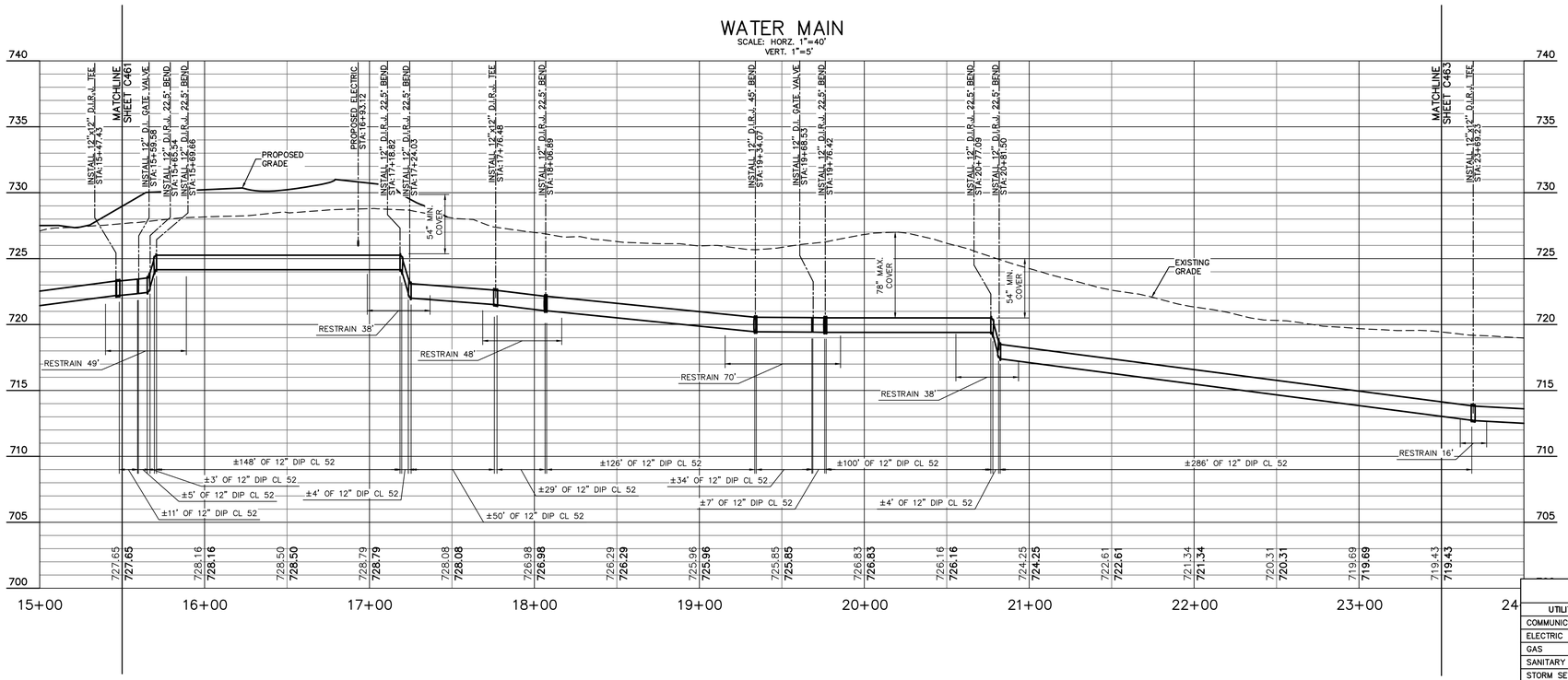
ASI TBM #50
MAG SPIKE SET IN WEST SIDE UTILITY POLE AT SW CORNER OF SR 44 AND COUNTY ROAD 525 E.
ELEV = 725.39

ASI TBM #51
MAG SPIKE SET IN SOUTH SIDE UTILITY POLE #40792 SOUTH SIDE OF SR 44 AND ±400' WEST OF MAILBOX #5557.
ELEV = 721.56

ASI TBM #52
CHISELED SQUARE ON WEST CORNER OF NW END OF CONCRETE HEADWALL OF BOX CULVERT UNDER SR 44 LOCATED ±600' SOUTHWEST OF COUNTY ROAD 600 E.
ELEV = 720.38

ASI TBM #53
MAG SPIKE SET IN WEST SIDE UTILITY POLE #06135 ON WEST SIDE OF OF COUNTY ROAD 525 E AND ±900' SOUTH OF SR 44.
ELEV = 735.00

ASI TBM #54
MAG SPIKE SET IN NW SIDE UTILITY POLE #12P1002 ON WEST SIDE OF COUNTY ROAD 525 E AND ±200' NORTH OF SOUTH PROPERTY LINE.
ELEV = 724.93



UTILITY CONTACTS

UTILITY	COMPANY	CONTACT	PHONE NO.
COMMUNICATIONS	CENTURYLINK (CTLCL)	BRUCE EMERICK	(574) 926-1247
ELECTRIC	JOHNSON COUNTY REMC	KEVIN SHELLEY	(317) 736-6174
GAS	VECTREN	JON EASTHAM	(765) 287-2119
SANITARY SEWER	CITY OF FRANKLIN, DPW	SALLY BROWN	(317) 736-3640
STORM SEWER	CITY OF FRANKLIN, DPW	SALLY BROWN	(317) 736-3640
WATER	INDIANA AMERICAN WATER	RYAN MOORE	(317) 885-2404

GENERAL NOTES:

1. CONTRACTOR SHALL PROTECT AND NOT DESTROY THE PROPERTY CORNER MONUMENTS DURING CONSTRUCTION.
2. CONTRACTOR TO VERIFY LOCATION, SIZE AND DEPTH OF EXISTING UTILITIES PRIOR TO COMMENCING ANY CONSTRUCTION. CONTACT ENGINEER IF VARIATION EXISTS.
3. SEE SHEET C002 GENERAL NOTES FOR MORE INFORMATION.

!! CAUTION !!

THE LOCATIONS OF ALL EXISTING UNDERGROUND UTILITIES SHOWN ON THIS PLAN ARE BASED UPON ABOVE GROUND EVIDENCE (including, but not limited to, manholes, inlets, valves, and marks made upon the ground by others) AND ARE SPECULATIVE IN NATURE. THERE MAY ALSO BE OTHER EXISTING UNDERGROUND UTILITIES FOR WHICH THERE IS NO ABOVE GROUND EVIDENCE OR FOR WHICH NO ABOVE GROUND EVIDENCE WAS OBSERVED. THE EXACT LOCATIONS OF SAID EXISTING UNDERGROUND UTILITIES SHALL BE VERIFIED BY THE CONTRACTOR PRIOR TO ANY AND ALL CONSTRUCTION.

CALL TOLL FREE
"811" OR 1-800-382-5544
- INDIANA UNDERGROUND -

GDI CONSTRUCTION
9775 Crosspoint Blvd
Suite 105
Indianapolis, IN 46256
317.567.6100

AMERICAN STRUCTUREPOINT INC.
9025 River Road, Suite 200 | Indianapolis, Indiana 46240
TEL 317.547.5580 | FAX 317.543.0270
www.structurepoint.com

I-65 SOUTH LOGISTICS CENTER LOT 1

81/89 Forest Road
Franklin, Indiana

CERTIFIED BY

ISSUANCE INDEX
DATE:
12/03/2020
PROJECT PHASE:
CONSTRUCTION DOCUMENTS

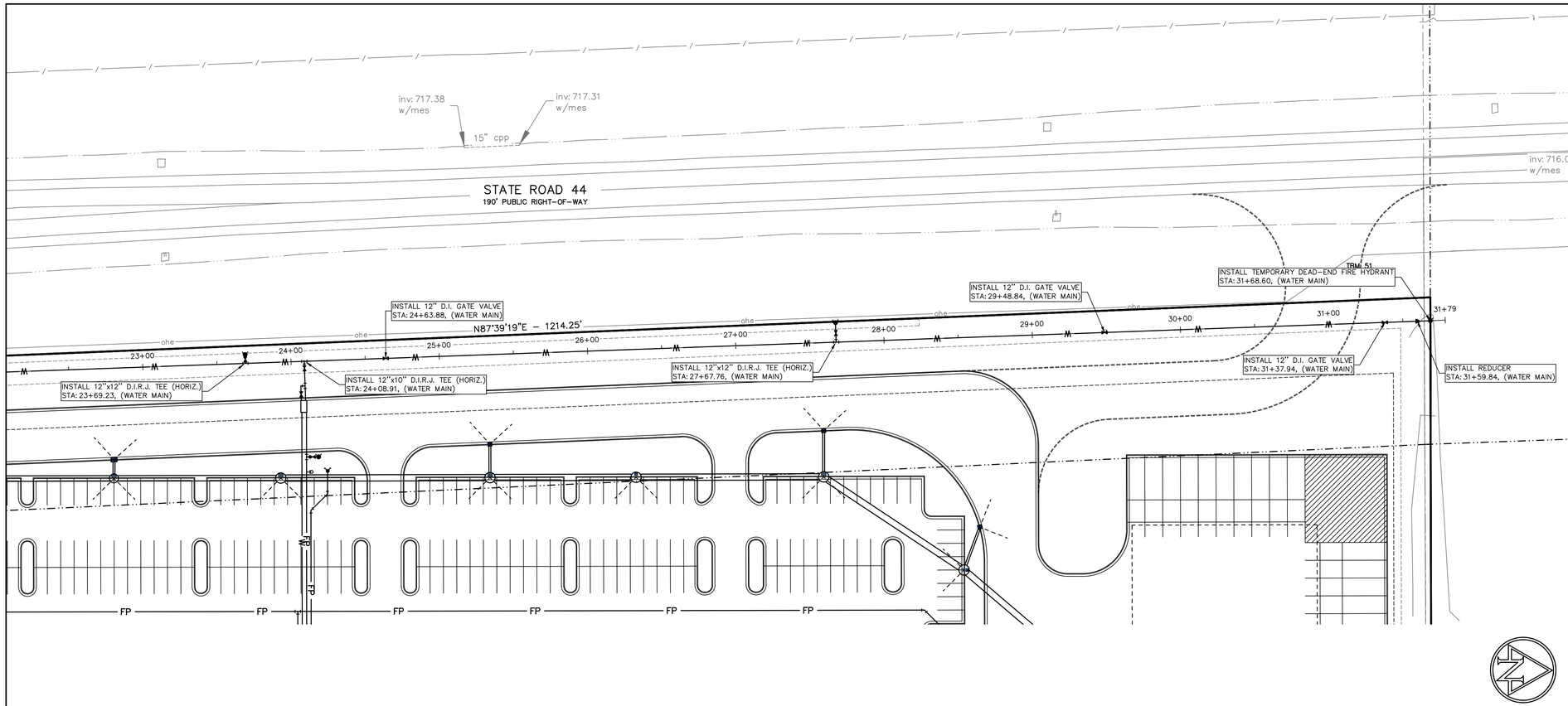
REVISION SCHEDULE		
NO.	DESCRIPTION	DATE

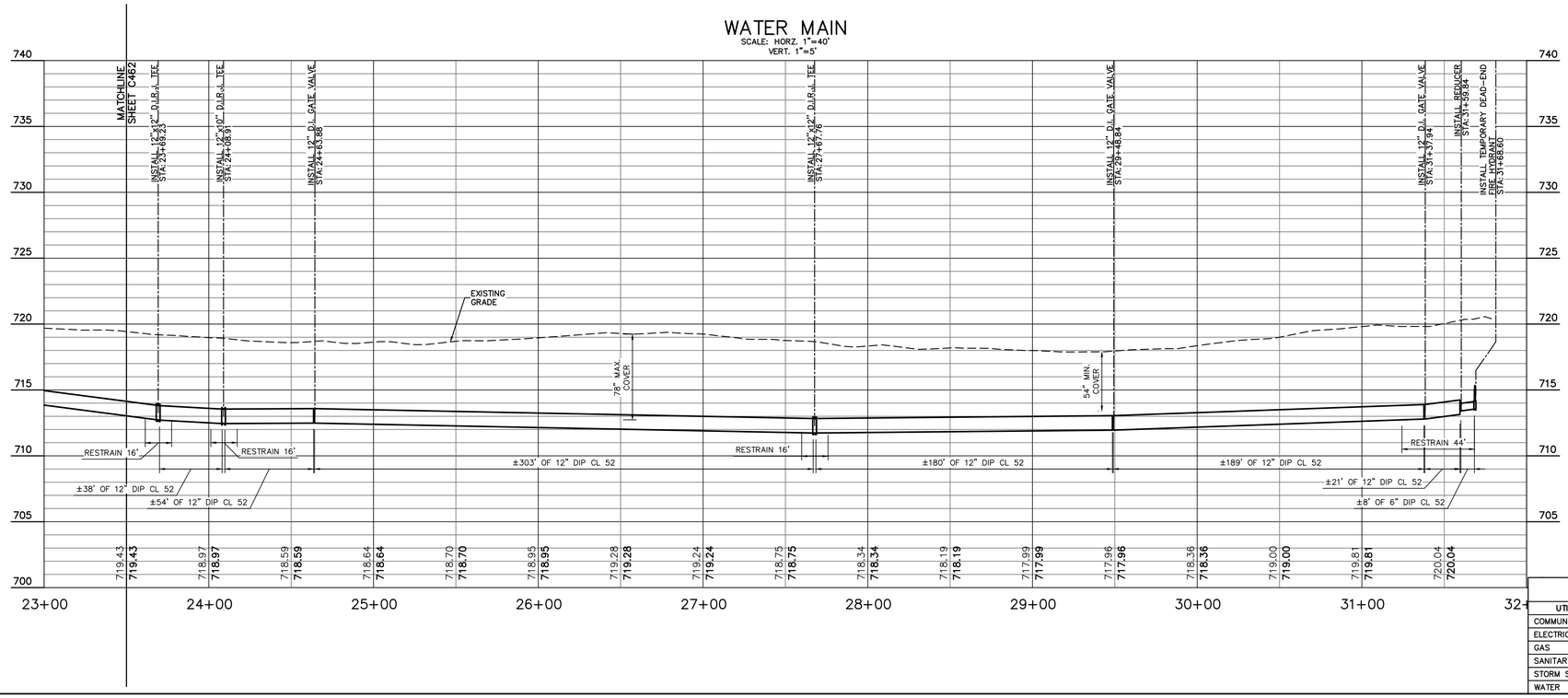
Project Number 2019.02798

WATER MAIN PLAN & PROFILE

C462

PLOT DATE: 12/3/2020 12:01 PM
PLOT SCALE: 12.5849
EDIT DATE: 12/2/2020
EDITED BY: MRVING
DRAWING FILE: p:\2019\02798\d. drawings\Civil\construction documents\2019.02798 CE C460 WATER PIP .dwg





EXISTING LEGEND

BEEHIVE INLET	STAND PIPE
COMBINATION POLE	STUMP
ELECTRIC METER BOX	SUB SURFACE DRAIN
GAS MARKER SIGN	TEMPORARY BENCH MARK
GUY WIRE	TEST HOLE
HOSE BIB	TELEPHONE MARKER SIGN
INLET	TELEPHONE PEDESTAL
MAILBOX	TRANSFORMER
PINE	TREE
POST	VENT
POWER POLE	WELL
RIGHT OF WAY MONUMENT	
SIGN	

GRANULAR BACKFILL REQUIRED

BENCHMARK DATA

(NAVD '88)

HELD OPUS SOLUTION 18-83940150 FOR BASE #1000 FOR INGCS JOHNSON COUNTY, IN

ASI TBM #32
CHISELED "X" ON SW BOLT OF FIRE HYDRANT EAST SIDE OF BARTRAM PARKWAY; ±300' SOUTH OF SR 44.
ELEV = 731.40

ASI TBM #50
MAG SPIKE SET IN WEST SIDE UTILITY POLE AT SW CORNER OF SR 44 AND COUNTY ROAD 525 E.
ELEV = 725.39

ASI TBM #51
MAG SPIKE SET IN SOUTH SIDE UTILITY POLE #40792 SOUTH SIDE OF SR 44 AND ±400' WEST OF MAILBOX #5557.
ELEV = 721.56

ASI TBM #52
CHISELED SQUARE ON WEST CORNER OF NW END OF CONCRETE HEADWALL OF BOX CULVERT UNDER SR 44 LOCATED ±600' SOUTHWEST OF COUNTY ROAD 600 E.
ELEV = 720.38

ASI TBM #53
MAG SPIKE SET IN WEST SIDE UTILITY POLE #06135 ON WEST SIDE OF OF COUNTY ROAD 525 E AND ±900' SOUTH OF SR 44.
ELEV = 735.00

ASI TBM #54
MAG SPIKE SET IN NW SIDE UTILITY POLE #12P1002 ON WEST SIDE OF COUNTY ROAD 525 E AND ±200' NORTH OF SOUTH PROPERTY LINE.
ELEV = 724.93

GENERAL NOTES:

1. CONTRACTOR SHALL PROTECT AND NOT DESTROY THE PROPERTY CORNER MONUMENTS DURING CONSTRUCTION.
2. CONTRACTOR TO VERIFY LOCATION, SIZE AND DEPTH OF EXISTING UTILITIES PRIOR TO COMMENCING ANY CONSTRUCTION. CONTACT ENGINEER IF VARIATION EXISTS.
3. SEE SHEET C002 GENERAL NOTES FOR MORE INFORMATION.

!! CAUTION !!

THE LOCATIONS OF ALL EXISTING UNDERGROUND UTILITIES SHOWN ON THIS PLAN ARE BASED UPON ABOVE GROUND EVIDENCE (including, but not limited to, manholes, inlets, valves, and marks made upon the ground by others) AND ARE SPECULATIVE IN NATURE. THERE MAY ALSO BE OTHER EXISTING UNDERGROUND UTILITIES FOR WHICH THERE IS NO ABOVE GROUND EVIDENCE OR FOR WHICH NO ABOVE GROUND EVIDENCE WAS OBSERVED. THE EXACT LOCATIONS OF SAID EXISTING UNDERGROUND UTILITIES SHALL BE VERIFIED BY THE CONTRACTOR PRIOR TO ANY AND ALL CONSTRUCTION.

CALL TOLL FREE
"811" OR 1-800-382-5544
- INDIANA UNDERGROUND -

UTILITY CONTACTS

UTILITY	COMPANY	CONTACT	PHONE NO.
COMMUNICATIONS	CENTURYLINK (CTLCL)	BRUCE EMERICK	(574) 926-1247
ELECTRIC	JOHNSON COUNTY REMC	KEVIN SHELLEY	(317) 736-6174
GAS	VECTREN	JON EASTHAM	(765) 287-2119
SANITARY SEWER	CITY OF FRANKLIN, DPW	SALLY BROWN	(317) 736-3640
STORM SEWER	CITY OF FRANKLIN, DPW	SALLY BROWN	(317) 736-3640
WATER	INDIANA AMERICAN WATER	RYAN MOORE	(317) 885-2404

GDI CONSTRUCTION
9775 Crosspoint Blvd
Suite 105
Indianapolis, IN 46256
317.567.6100

AMERICAN STRUCTUREPOINT INC.
9025 River Road, Suite 200 | Indianapolis, Indiana 46240
TEL 317.547.5580 | FAX 317.543.0270
www.structurepoint.com

I-65 SOUTH LOGISTICS CENTER LOT 1

81/89 Forest Road
Franklin, Indiana

JUSTIN ERIC OLIVER
REGISTERED
NO. PE10800018
STATE OF INDIANA
PROFESSIONAL ENGINEER
"I AFFIRM UNDER THE PENALTIES FOR PERJURY, THAT I HAVE TAKEN REASONABLE CARE TO REDACT EACH SOCIAL SECURITY NUMBER IN THIS DOCUMENT, UNLESS REQUIRED BY LAW."
NOT FOR CONSTRUCTION

CERTIFIED BY

ISSUANCE INDEX
DATE:
12/03/2020
PROJECT PHASE:
CONSTRUCTION DOCUMENTS

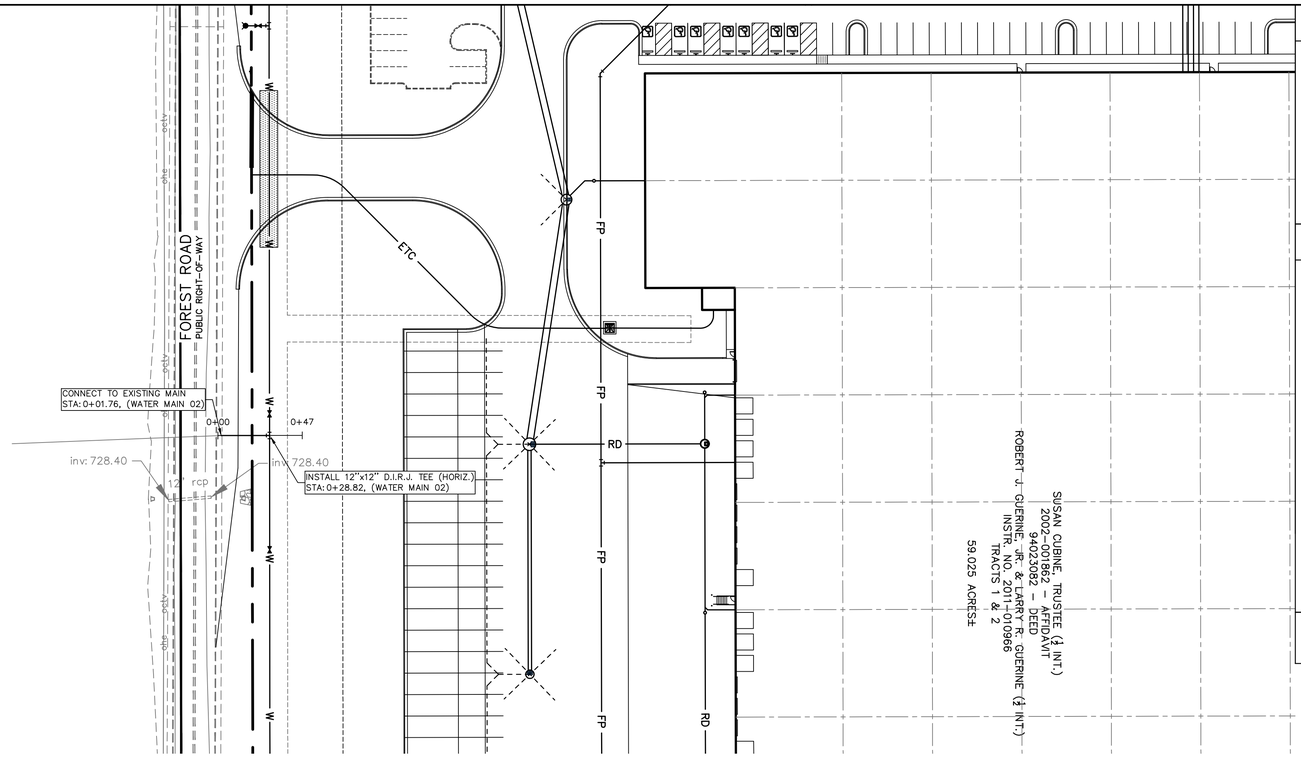
REVISION SCHEDULE		
NO.	DESCRIPTION	DATE

Project Number 2019.02798

WATER MAIN PLAN & PROFILE

C463

PLOT DATE: 12/3/2020 12:01 PM
PLOT SCALE: 12.5849
EDIT DATE: 12/2/2020
EDITED BY: MRVING
DRAWING FILE: p:\2019\02798\d_drawings\Civil\construction documents\2019.02798 CE C460 WATER PIP .dwg



EXISTING LEGEND

BEEHIVE INLET	STAND PIPE
COMBINATION POLE	STUMP
ELECTRIC METER BOX	SUB SURFACE DRAIN
GAS MARKER SIGN	TEMPORARY BENCH MARK
GUY WIRE	TEST HOLE
HOSE BIB	TELEPHONE MARKER SIGN
INLET	TELEPHONE PEDESTAL
MAILBOX	TRANSFORMER
PINE	TREE
POST	VENT
POWER POLE	WELL
RIGHT OF WAY MONUMENT	
SIGN	

BENCHMARK DATA

(NAVD '88)

HELD OPUS SOLUTION 18-83940150 FOR BASE #1000 FOR INGCS JOHNSON COUNTY, IN

ASI TBM #32
CHISELED "X" ON SW BOLT OF FIRE HYDRANT EAST SIDE OF BARTRAM PARKWAY; ±300' SOUTH OF SR 44.
ELEV = 731.40

ASI TBM #50
MAG SPIKE SET IN WEST SIDE UTILITY POLE AT SW CORNER OF SR 44 AND COUNTY ROAD 525 E.
ELEV = 725.39

ASI TBM #51
MAG SPIKE SET IN SOUTH SIDE UTILITY POLE #40792 SOUTH SIDE OF SR 44 AND ±400' WEST OF MAILBOX #557.
ELEV = 721.56

ASI TBM #52
CHISELED SQUARE ON WEST CORNER OF NW END OF CONCRETE HEADWALL OF BOX CULVERT UNDER SR 44 LOCATED ±600' SOUTHWEST OF COUNTY ROAD 600 E.
ELEV = 720.38

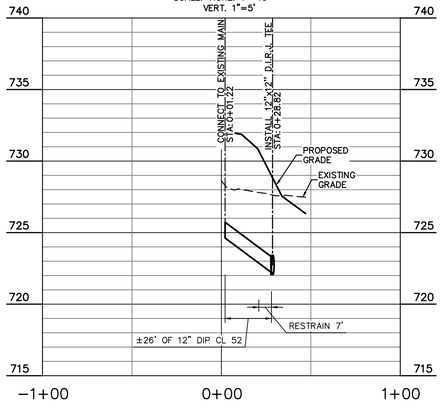
ASI TBM #53
MAG SPIKE SET IN WEST SIDE UTILITY POLE #06135 ON WEST SIDE OF OF COUNTY ROAD 525 E AND ±900' SOUTH OF SR 44.
ELEV = 735.00

ASI TBM #54
MAG SPIKE SET IN NW SIDE UTILITY POLE #12P1002 ON WEST SIDE OF COUNTY ROAD 525 E AND ±200' NORTH OF SOUTH PROPERTY LINE.
ELEV = 724.93

GRANULAR BACKFILL REQUIRED

WATER MAIN 02

SCALE: HORZ. 1"=40'
VERT. 1"=5'



GENERAL NOTES:

1. CONTRACTOR SHALL PROTECT AND NOT DESTROY THE PROPERTY CORNER MONUMENTS DURING CONSTRUCTION.
2. CONTRACTOR TO VERIFY LOCATION, SIZE AND DEPTH OF EXISTING UTILITIES PRIOR TO COMMENCING ANY CONSTRUCTION. CONTACT ENGINEER IF VARIATION EXISTS.
3. SEE SHEET C002 GENERAL NOTES FOR MORE INFORMATION.

!! CAUTION !!

THE LOCATIONS OF ALL EXISTING UNDERGROUND UTILITIES SHOWN ON THIS PLAN ARE BASED UPON ABOVE GROUND EVIDENCE (including, but not limited to, manholes, inlets, valves, and marks made upon the ground by others) AND ARE SPECULATIVE IN NATURE. THERE MAY ALSO BE OTHER EXISTING UNDERGROUND UTILITIES FOR WHICH THERE IS NO ABOVE GROUND EVIDENCE OR FOR WHICH NO ABOVE GROUND EVIDENCE WAS OBSERVED. THE EXACT LOCATIONS OF SAID EXISTING UNDERGROUND UTILITIES SHALL BE VERIFIED BY THE CONTRACTOR PRIOR TO ANY AND ALL CONSTRUCTION.

CALL TOLL FREE
"811" OR 1-800-382-5544
- INDIANA UNDERGROUND -

UTILITY CONTACTS

UTILITY	COMPANY	CONTACT	PHONE NO.
COMMUNICATIONS	CENTURYLINK (CTLCL)	BRUCE EMERICK	(574) 926-1247
ELECTRIC	JOHNSON COUNTY REMC	KEVIN SHELLEY	(317) 736-6174
GAS	VECTREN	JON EASTHAM	(765) 287-2119
SANITARY SEWER	CITY OF FRANKLIN, DPW	SALLY BROWN	(317) 736-3640
STORM SEWER	CITY OF FRANKLIN, DPW	SALLY BROWN	(317) 736-3640
WATER	INDIANA AMERICAN WATER	RYAN MOORE	(317) 885-2404

GDI CONSTRUCTION
9775 Crosspoint Blvd
Suite 105
Indianapolis, IN 46256
317.567.6100

AMERICAN STRUCTUREPOINT INC.
9025 River Road, Suite 200 | Indianapolis, Indiana 46240
TEL 317.547.5580 | FAX 317.543.0270
www.structurepoint.com

I-65 SOUTH LOGISTICS CENTER LOT 1

81/89 Forest Road
Franklin, Indiana

JUSTIN ERIC OTT
REGISTERED
NO. PE10800018
PROFESSIONAL ENGINEER
STATE OF INDIANA
DRAWING IS NOT FOR CONSTRUCTION UNLESS SIGNED BY PROFESSIONAL ENGINEER

CERTIFIED BY

ISSUANCE INDEX
DATE:
12/03/2020
PROJECT PHASE:
CONSTRUCTION DOCUMENTS

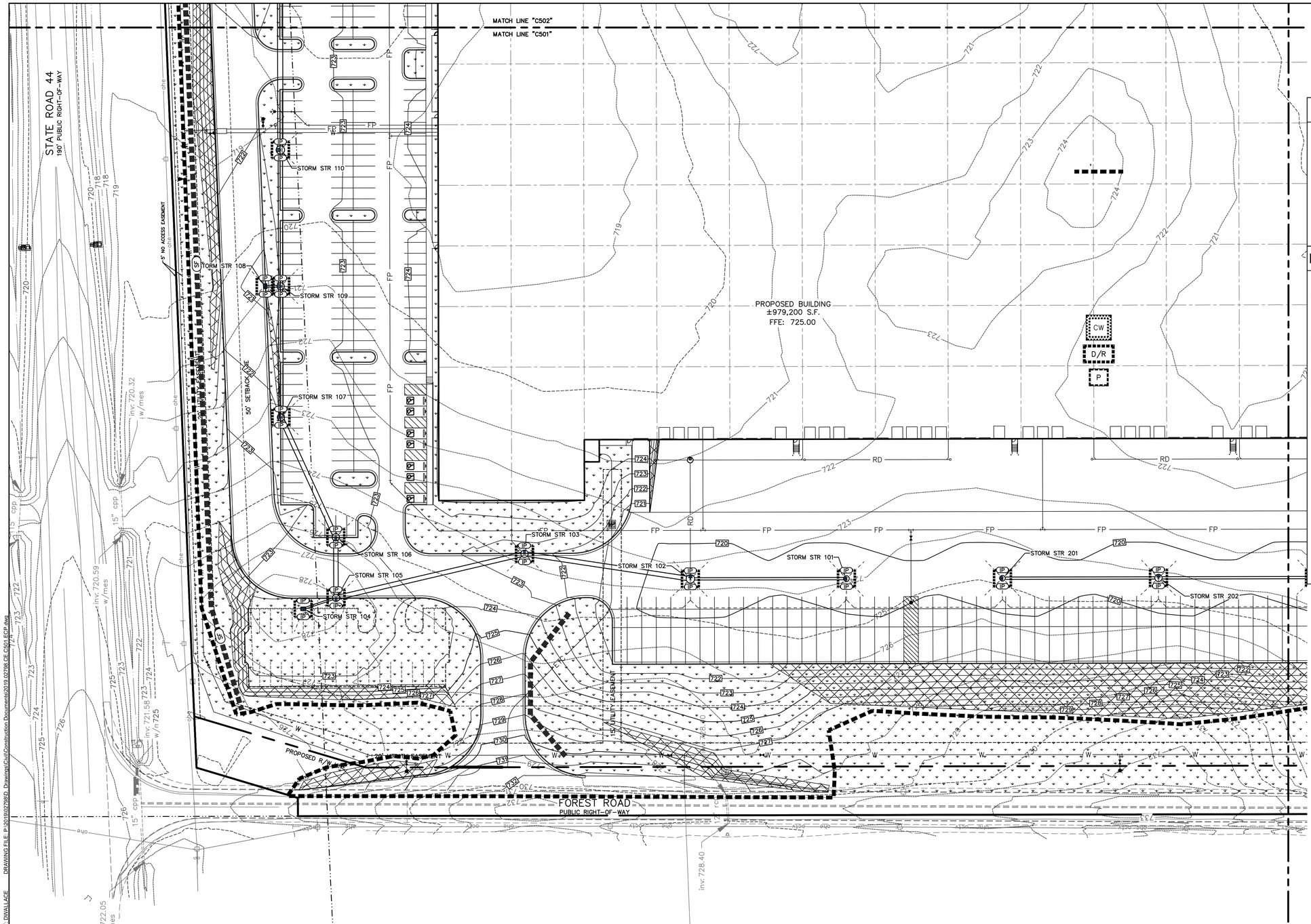
REVISION SCHEDULE		
NO.	DESCRIPTION	DATE

Project Number 2019.02798

WATER MAIN PLAN & PROFILE

C464

PLOT DATE: 12/3/2020 12:01 PM
PLOT SCALE: 1:2.5849
EDIT DATE: 12/2/2020
EDITED BY: MRVING
DRAWING FILE: p:\2019\02798\d_drawings\Civil\construction documents\2019.02798 CE C460 WATER_PIP .dwg



0' 40' 80'

SCALE: 1"=40'

EXISTING LEGEND

- BEEHIVE INLET
- COMBINATION POLE
- ELECTRIC METER BOX
- GAS MARKER SIGN
- GUY WIRE
- HOSE BIB
- INLET
- MAILBOX
- PINE
- POST
- POWER POLE
- RIGHT OF WAY MONUMENT
- SIGN
- STAND PIPE
- STUMP
- SUB SURFACE DRAIN
- TEMPORARY BENCH MARK
- TEST HOLE
- TELEPHONE MARKER SIGN
- TELEPHONE PEDESTAL
- TRANSFORMER
- TREE
- VENT
- WELL

EROSION CONTROL LEGEND

- SF — SILT FENCE
- CONSTRUCTION LIMITS
- IP — INLET PROTECTION
- AREA SUBJECT TO TEMPORARY SEEDING DURING CONSTRUCTION AND PERMANENT SEEDING AFTER CONSTRUCTION IS COMPLETE (REFER TO LANDSCAPE PLANS)
- EROSION CONTROL BLANKET WITH SEEDING
- GRAVEL CONSTRUCTION ENTRANCE
- STAGING AREA
- CW — CONCRETE WASHOUT
- D/R — DUMPSTER / RECYCLING AREA
- P — PORT-O-LET
- N.O.I. — N.O.I. SIGN POSTING
- OUTLET PROTECTION
- ROCK DONUT
- ROCK CHECK DAM

UTILITY CONTACTS

UTILITY	COMPANY	CONTACT	PHONE NO.
COMMUNICATIONS	CENTURYLINK (CTLCL)	BRUCE EMERICK	(574) 926-1247
ELECTRIC	JOHNSON COUNTY REMC	KEVIN SHELLEY	(317) 736-6174
GAS	VECTREN	JON EASTHAM	(765) 287-2119
SANITARY SEWER	CITY OF FRANKLIN, DPW	SALLY BROWN	(317) 736-3640
STORM SEWER	CITY OF FRANKLIN, DPW	SALLY BROWN	(317) 736-3640
WATER	INDIANA AMERICAN WATER	RYAN MOORE	(317) 885-2404

GENERAL NOTES:

1. CONTRACTOR SHALL PROTECT AND NOT DESTROY THE PROPERTY CORNER MONUMENTS DURING CONSTRUCTION.
2. CONTRACTOR TO VERIFY LOCATION, SIZE AND DEPTH OF EXISTING UTILITIES PRIOR TO COMMENCING ANY CONSTRUCTION. CONTACT ENGINEER IF VARIATION EXISTS.
3. SEE SHEET C002 GENERAL NOTES FOR MORE INFORMATION.

!! CAUTION !!

THE LOCATIONS OF ALL EXISTING UNDERGROUND UTILITIES SHOWN ON THIS PLAN ARE BASED UPON ABOVE GROUND EVIDENCE (including, but not limited to, manholes, inlets, valves, and marks made upon the ground by others) AND ARE SPECULATIVE IN NATURE. THERE MAY ALSO BE OTHER EXISTING UNDERGROUND UTILITIES FOR WHICH THERE IS NO ABOVE GROUND EVIDENCE OR FOR WHICH NO ABOVE GROUND EVIDENCE WAS OBSERVED. THE EXACT LOCATIONS OF SAID EXISTING UNDERGROUND UTILITIES SHALL BE VERIFIED BY THE CONTRACTOR PRIOR TO ANY AND ALL CONSTRUCTION.

CALL TOLL FREE
"811" OR 1-800-382-5544
- INDIANA UNDERGROUND -

GDI CONSTRUCTION
9775 Crosspoint Blvd
Suite 105
Indianapolis, IN 46256
317.567.6100

AMERICAN STRUCTUREPOINT INC.
9025 River Road, Suite 200 | Indianapolis, Indiana 46240
TEL 317.547.5580 | FAX 317.543.0270
www.structurepoint.com

I-65 SOUTH LOGISTICS CENTER LOT 1

81/89 Forest Road
Franklin, Indiana

CERTIFIED BY

ISSUANCE INDEX
DATE:
12/03/2020
PROJECT PHASE:
CONSTRUCTION DOCUMENTS

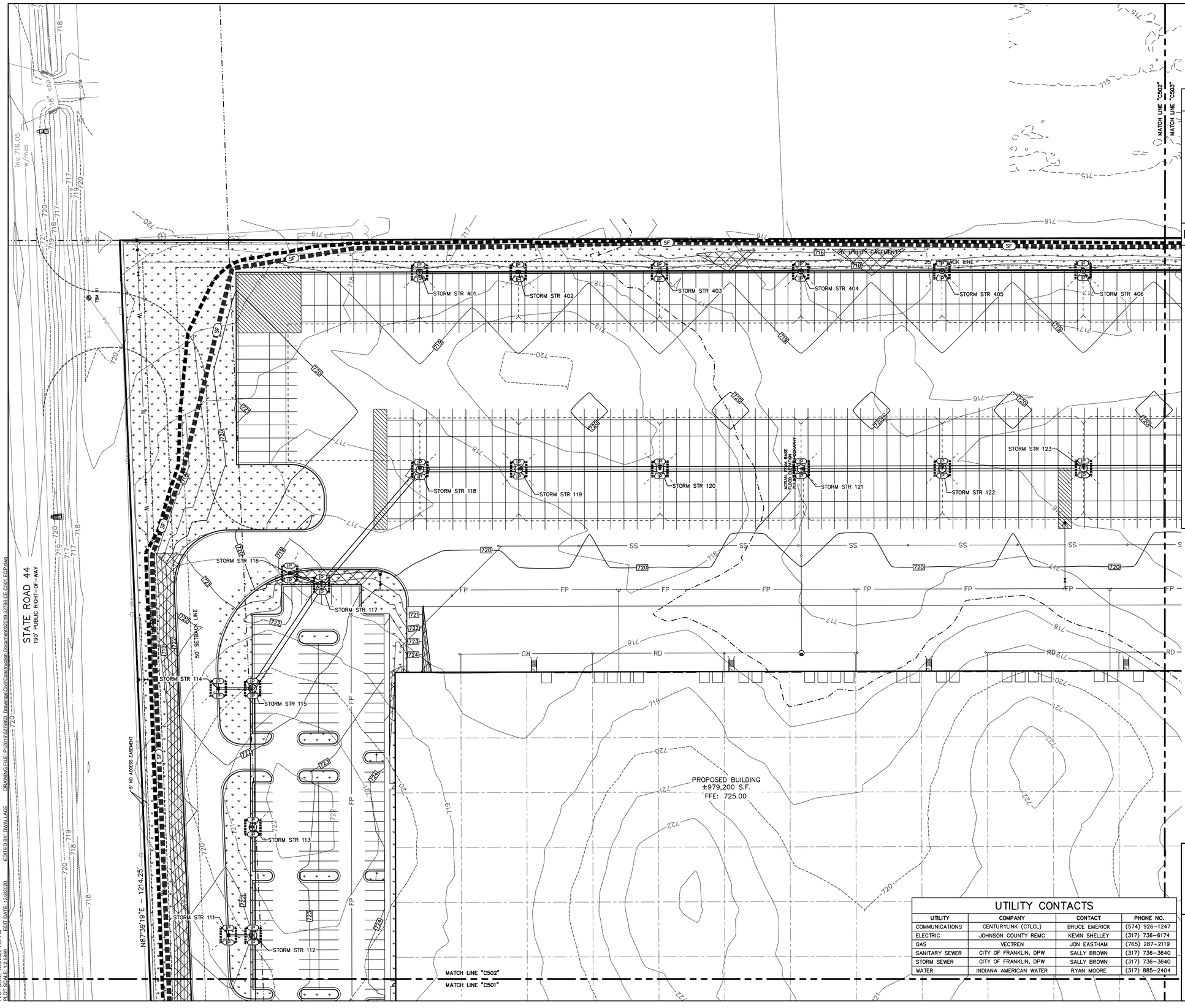
REVISION SCHEDULE		
NO.	DESCRIPTION	DATE

Project Number 2019.02798

EROSION CONTROL PLAN

C501

PLOT DATE: 12/3/2020 1:07 PM
PLOT SCALE: 1:2.5849
EDIT DATE: 12/3/2020
EDITED BY: DWALLACE
DRAWING FILE: P:\2019\02798\D Drawings\Civil\Construction Documents\2019.02798 CE C501 ESCP.dwg



EXISTING LEGEND

- BEEHIVE INLET
- COMBINATION POLE
- ELECTRIC METER BOX
- GAS MARKER SIGN
- GUY WIRE
- HOSE BIB
- INLET
- MAILBOX
- PINE
- POST
- POWER POLE
- RIGHT OF WAY MONUMENT
- SIGN
- STAND PIPE
- STUMP
- SUB SURFACE DRAIN
- TEMPORARY BENCH MARK
- TEST HOLE
- TELEPHONE MARKER SIGN
- TELEPHONE PEDESTAL
- TRANSFORMER
- TREE
- VENT
- WELL

EROSION CONTROL LEGEND

- SF — SILT FENCE
- CONSTRUCTION LIMITS
- IP — INLET PROTECTION
- AREA SUBJECT TO TEMPORARY SEEDING DURING CONSTRUCTION AND PERMANENT SEEDING AFTER CONSTRUCTION IS COMPLETE (REFER TO LANDSCAPE PLANS)
- EROSION CONTROL BLANKET WITH SEEDING
- GRAVEL CONSTRUCTION ENTRANCE
- STAGING AREA
- CW — CONCRETE WASHOUT
- D/R — DUMPSTER / RECYCLING AREA
- P — PORT-O-LET
- N.O.I. — N.O.I. SIGN POSTING
- OUTLET PROTECTION
- ROCK DONUT
- ROCK CHECK DAM

UTILITY CONTACTS

UTILITY	COMPANY	CONTACT	PHONE NO.
COMMUNICATIONS	CENTURYLINK (CTLCL)	BRUCE EMERICK	(574) 926-1247
ELECTRIC	JOHNSON COUNTY REMC	KEVIN SHELLEY	(317) 736-6174
GAS	VECTREN	JON EASTHAM	(765) 287-2119
SANITARY SEWER	CITY OF FRANKLIN, DPW	SALLY BROWN	(317) 736-3640
STORM SEWER	CITY OF FRANKLIN, DPW	SALLY BROWN	(317) 736-3640
WATER	INDIANA AMERICAN WATER	RYAN MOORE	(317) 885-2404

GENERAL NOTES:

1. CONTRACTOR SHALL PROTECT AND NOT DESTROY THE PROPERTY CORNER MONUMENTS DURING CONSTRUCTION.
2. CONTRACTOR TO VERIFY LOCATION, SIZE AND DEPTH OF EXISTING UTILITIES PRIOR TO COMMENCING ANY CONSTRUCTION. CONTACT ENGINEER IF VARIATION EXISTS.
3. SEE SHEET C002 GENERAL NOTES FOR MORE INFORMATION.

!! CAUTION !!

THE LOCATIONS OF ALL EXISTING UNDERGROUND UTILITIES SHOWN ON THIS PLAN ARE BASED UPON ABOVE GROUND EVIDENCE (Including, but not limited to, manholes, inlets, valves, and marks made upon the ground by others) AND ARE SPECULATIVE IN NATURE. THERE MAY ALSO BE OTHER EXISTING UNDERGROUND UTILITIES FOR WHICH THERE IS NO ABOVE GROUND EVIDENCE OR FOR WHICH NO ABOVE GROUND EVIDENCE WAS OBSERVED. THE EXACT LOCATIONS OF SAID EXISTING UNDERGROUND UTILITIES SHALL BE VERIFIED BY THE CONTRACTOR PRIOR TO ANY AND ALL CONSTRUCTION.

CALL TOLL FREE
"811" OR 1-800-382-5544
– INDIANA UNDERGROUND –

GDI CONSTRUCTION
9775 Crosspoint Blvd
Suite 105
Indianapolis, IN 46256

317.567.6100

AMERICAN STRUCTUREPOINT INC.
9025 River Road, Suite 200 | Indianapolis, Indiana 46240
TEL 317.547.5580 | FAX 317.543.0270
www.structurepoint.com

I-65 SOUTH LOGISTICS CENTER LOT 1

81/89 Forest Road
Franklin, Indiana

JUSTIN ERIC OLAH — REGISTERED — NO. PE10900018 — STATE OF INDIANA — PROFESSIONAL ENGINEER — NOT FOR CONSTRUCTION UNLESS SIGNED AND SEALED

CERTIFIED BY

ISSUANCE INDEX
DATE:
12/03/2020
PROJECT PHASE:
CONSTRUCTION DOCUMENTS

REVISION SCHEDULE		
NO.	DESCRIPTION	DATE

Project Number 2019.02798

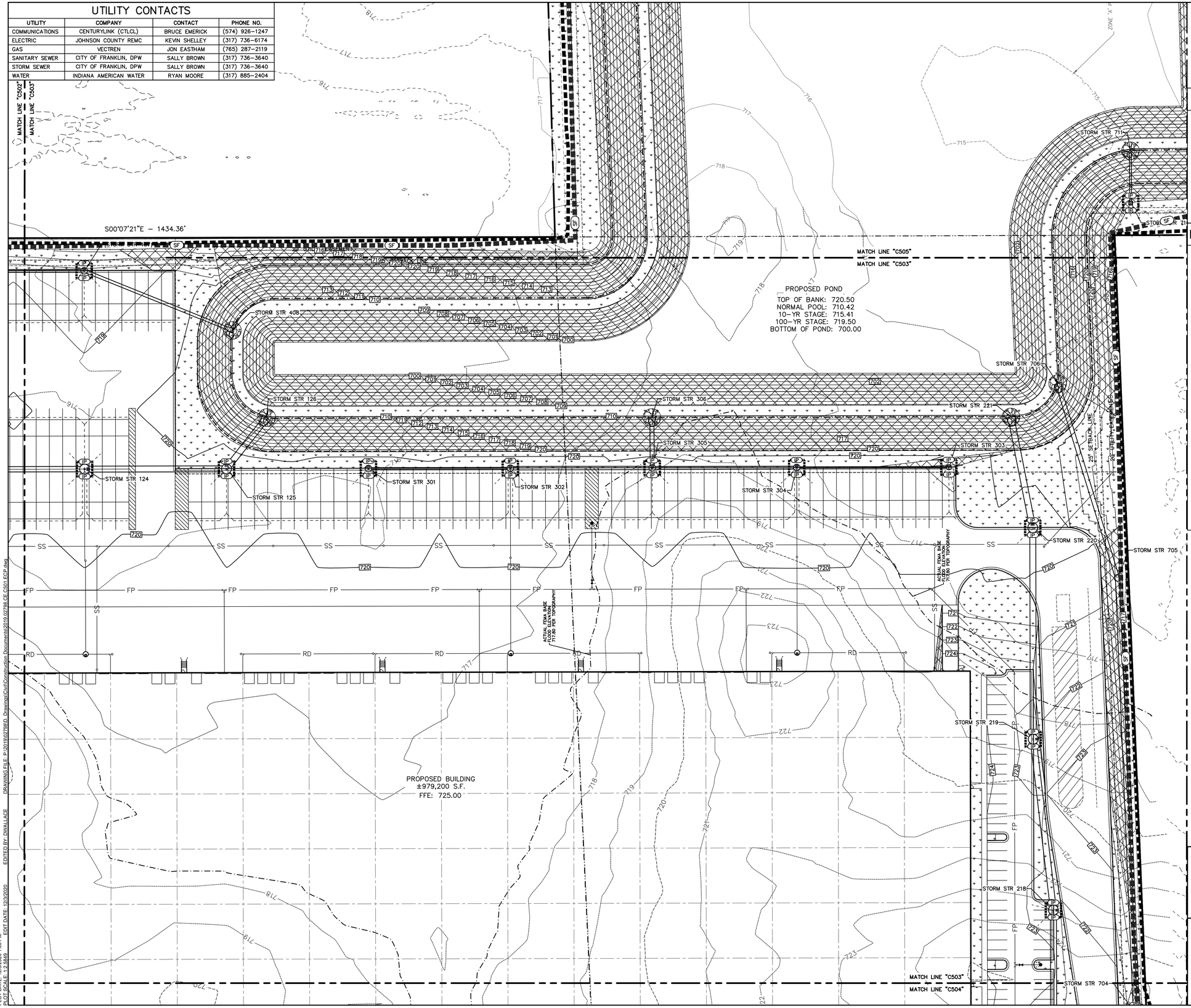
EROSION CONTROL PLAN

C502

PLOT DATE: 12/3/2020 1:07 PM
PLOT SCALE: 1:2.5849
EDIT DATE: 12/3/2020
EDITED BY: DWALLACE
DRAWING FILE P:\2019\02798\D Drawings\Civil\Construction Documents\2019.02798 CE C501 ECP.dwg

UTILITY CONTACTS

UTILITY	COMPANY	CONTACT	PHONE NO.
COMMUNICATIONS	CENTURYLINK (CTLCL)	BRUCE EMERICK	(574) 926-1247
ELECTRIC	JOHNSON COUNTY REMC	KEVIN SHELLEY	(317) 736-6174
GAS	VECTREN	JON EASTHAM	(765) 287-2119
SANITARY SEWER	CITY OF FRANKLIN, DPW	SALLY BROWN	(317) 736-3640
STORM SEWER	CITY OF FRANKLIN, DPW	SALLY BROWN	(317) 736-3640
WATER	INDIANA AMERICAN WATER	RYAN MOORE	(317) 885-2404



0' 40' 80'

SCALE: 1"=40'

EXISTING LEGEND

- BEEHIVE INLET
- COMBINATION POLE
- ELECTRIC METER BOX
- GAS MARKER SIGN
- GUY WIRE
- HOSE BIB
- INLET
- MAILBOX
- PINE
- POST
- POWER POLE
- RIGHT OF WAY MONUMENT
- SIGN
- STAND PIPE
- STUMP
- SUB SURFACE DRAIN
- TEMPORARY BENCH MARK
- TEST HOLE
- TELEPHONE MARKER SIGN
- TELEPHONE PEDESTAL
- TRANSFORMER
- TREE
- VENT
- WELL

EROSION CONTROL LEGEND

- SF — SILT FENCE
- CONSTRUCTION LIMITS
- IP — INLET PROTECTION
- AREA SUBJECT TO TEMPORARY SEEDING DURING CONSTRUCTION AND PERMANENT SEEDING AFTER CONSTRUCTION IS COMPLETE (REFER TO LANDSCAPE PLANS)
- EROSION CONTROL BLANKET WITH SEEDING
- GRAVEL CONSTRUCTION ENTRANCE
- STAGING AREA
- CW — CONCRETE WASHOUT
- D/R — DUMPSTER / RECYCLING AREA
- P — PORT-O-LET
- N.O.I. — N.O.I. SIGN POSTING
- OUTLET PROTECTION
- ROCK DONUT
- ROCK CHECK DAM

GENERAL NOTES:

1. CONTRACTOR SHALL PROTECT AND NOT DESTROY THE PROPERTY CORNER MONUMENTS DURING CONSTRUCTION.
2. CONTRACTOR TO VERIFY LOCATION, SIZE AND DEPTH OF EXISTING UTILITIES PRIOR TO COMMENCING ANY CONSTRUCTION. CONTACT ENGINEER IF VARIATION EXISTS.
3. SEE SHEET C002 GENERAL NOTES FOR MORE INFORMATION.

!! CAUTION !!

THE LOCATIONS OF ALL EXISTING UNDERGROUND UTILITIES SHOWN ON THIS PLAN ARE BASED UPON ABOVE GROUND EVIDENCE (including, but not limited to, manholes, inlets, valves, and marks made upon the ground by others) AND ARE SPECULATIVE IN NATURE. THERE MAY ALSO BE OTHER EXISTING UNDERGROUND UTILITIES FOR WHICH THERE IS NO ABOVE GROUND EVIDENCE OR FOR WHICH NO ABOVE GROUND EVIDENCE WAS OBSERVED. THE EXACT LOCATIONS OF SAID EXISTING UNDERGROUND UTILITIES SHALL BE VERIFIED BY THE CONTRACTOR PRIOR TO ANY AND ALL CONSTRUCTION.

CALL TOLL FREE
"811" OR 1-800-382-5544
– INDIANA UNDERGROUND –

GDI CONSTRUCTION
9775 Crosspoint Blvd
Suite 105
Indianapolis, IN 46256
317.567.6100

AMERICAN STRUCTUREPOINT INC.
9025 River Road, Suite 200 | Indianapolis, Indiana 46240
TEL 317.547.5580 | FAX 317.543.0270
www.structurepoint.com

I-65 SOUTH LOGISTICS CENTER LOT 1

81/89 Forest Road
Franklin, Indiana

JUSTIN ERIC OLT — REGISTERED — PE — PROFESSIONAL ENGINEER — STATE OF INDIANA — NOT FOR CONSTRUCTION — PRELIMINARY PLANS FOR REVIEW PURPOSES ONLY

CERTIFIED BY

ISSUANCE INDEX
DATE:
12/03/2020
PROJECT PHASE:
CONSTRUCTION DOCUMENTS

REVISION SCHEDULE		
NO.	DESCRIPTION	DATE

Project Number 2019.02798

EROSION CONTROL PLAN

C503

PLOT DATE: 12/3/2020 1:08 PM
PLOT SCALE: 1:2.4849
EDIT DATE: 12/3/2020
EDITED BY: DWALLACE
DRAWING FILE: P:\2019\02798\D Drawings\Civil\Construction Documents\2019.02798 CE C501 ECP.dwg

MATCH LINE "C503"
MATCH LINE "C504"

PROPOSED BUILDING
±979,200 S.F.
FFE: 725.00

TEMPORARY TOPSOIL STOCKPILE

FOREST ROAD
PUBLIC RIGHT-OF-WAY

20' UTILITY EASEMENT

PROPOSED R/W LINE

15" CPP

inv: 719.07

exist. drainage inlet
tr: 719.54
inv(se): 716.89

STORM STR 203
STORM STR 204
STORM STR 205
STORM STR 206
STORM STR 207
STORM STR 208
STORM STR 210
STORM STR 212
STORM STR 211
STORM STR 209
STORM STR 701
STORM STR 213
STORM STR 214
STORM STR 215
STORM STR 216
STORM STR 217
STORM STR 703
STORM STR 704

JOHNSON'S LINE

0' 40' 80'
SCALE: 1"=40'

EXISTING LEGEND

- BEEHIVE INLET
- COMBINATION POLE
- ELECTRIC METER BOX
- GAS MARKER SIGN
- GUY WIRE
- HOSE BIB
- INLET
- MAILBOX
- PINE
- POST
- POWER POLE
- RIGHT OF WAY MONUMENT
- SIGN
- STAND PIPE
- STUMP
- SUB SURFACE DRAIN
- TEMPORARY BENCH MARK
- TEST HOLE
- TELEPHONE MARKER SIGN
- TELEPHONE PEDESTAL
- TRANSFORMER
- TREE
- VENT
- WELL

EROSION CONTROL LEGEND

- SF — SILT FENCE
- CONSTRUCTION LIMITS
- IP — INLET PROTECTION
- AREA SUBJECT TO TEMPORARY SEEDING DURING CONSTRUCTION AND PERMANENT SEEDING AFTER CONSTRUCTION IS COMPLETE (REFER TO LANDSCAPE PLANS)
- EROSION CONTROL BLANKET WITH SEEDING
- GRAVEL CONSTRUCTION ENTRANCE
- STAGING AREA
- CW — CONCRETE WASHOUT
- D/R — DUMPSTER / RECYCLING AREA
- P — PORT-O-LET
- N.O.I. — N.O.I. SIGN POSTING
- OUTLET PROTECTION
- ROCK DONUT
- ROCK CHECK DAM

GENERAL NOTES:

1. CONTRACTOR SHALL PROTECT AND NOT DESTROY THE PROPERTY CORNER MONUMENTS DURING CONSTRUCTION.
2. CONTRACTOR TO VERIFY LOCATION, SIZE AND DEPTH OF EXISTING UTILITIES PRIOR TO COMMENCING ANY CONSTRUCTION. CONTACT ENGINEER IF VARIATION EXISTS.
3. SEE SHEET C002 GENERAL NOTES FOR MORE INFORMATION.

UTILITY CONTACTS

UTILITY	COMPANY	CONTACT	PHONE NO.
COMMUNICATIONS	CENTURYLINK (CTLCL)	BRUCE EMERICK	(574) 926-1247
ELECTRIC	JOHNSON COUNTY REMC	KEVIN SHELLEY	(317) 736-6174
GAS	VECTREN	JON EASTHAM	(765) 287-2119
SANITARY SEWER	CITY OF FRANKLIN, DPW	SALLY BROWN	(317) 736-3640
STORM SEWER	CITY OF FRANKLIN, DPW	SALLY BROWN	(317) 736-3640
WATER	INDIANA AMERICAN WATER	RYAN MOORE	(317) 885-2404

!! CAUTION !!

THE LOCATIONS OF ALL EXISTING UNDERGROUND UTILITIES SHOWN ON THIS PLAN ARE BASED UPON ABOVE GROUND EVIDENCE (including, but not limited to, manholes, inlets, valves, and marks made upon the ground by others) AND ARE SPECULATIVE IN NATURE. THERE MAY ALSO BE OTHER EXISTING UNDERGROUND UTILITIES FOR WHICH THERE IS NO ABOVE GROUND EVIDENCE OR FOR WHICH NO ABOVE GROUND EVIDENCE WAS OBSERVED. THE EXACT LOCATIONS OF SAID EXISTING UNDERGROUND UTILITIES SHALL BE VERIFIED BY THE CONTRACTOR PRIOR TO ANY AND ALL CONSTRUCTION.

CALL TOLL FREE
"811" OR 1-800-382-5544
– INDIANA UNDERGROUND –

GDI CONSTRUCTION
9775 Crosspoint Blvd
Suite 105
Indianapolis, IN 46256
317.567.6100

AMERICAN STRUCTUREPOINT INC.
9025 River Road, Suite 200 | Indianapolis, Indiana 46240
TEL 317.547.5580 | FAX 317.543.0270
www.structurepoint.com

I-65 SOUTH LOGISTICS CENTER LOT 1

81/89 Forest Road
Franklin, Indiana

JUSTIN ERIC OLAH
REGISTERED
NO.
PE11600882
STATE OF INDIANA
PROFESSIONAL ENGINEER
RELEASED FOR CONSTRUCTION
NOT FOR BIDDING OR PERMIT PURPOSES

CERTIFIED BY

ISSUANCE INDEX
DATE:
12/03/2020
PROJECT PHASE:
CONSTRUCTION DOCUMENTS

REVISION SCHEDULE		
NO.	DESCRIPTION	DATE

Project Number 2019.02798

EROSION CONTROL PLAN

C504

PLOT DATE: 12/3/2020 1:08 PM
PLOT SCALE: 1:2.5849
EDIT DATE: 12/3/2020
EDITED BY: DWALLACE
DRAWING FILE: P:\2019\02798\D Drawing\Civil Construction Documents\2019.02798 CE C501 ECP.dwg

UTILITY CONTACTS

UTILITY	COMPANY	CONTACT	PHONE NO.
COMMUNICATIONS	CENTURYLINK (CTLCL)	BRUCE EMERICK	(574) 926-1247
ELECTRIC	JOHNSON COUNTY REMC	KEVIN SHELLEY	(317) 736-6174
GAS	VECTREN	JON EASTHAM	(765) 287-2119
SANITARY SEWER	CITY OF FRANKLIN, DPW	SALLY BROWN	(317) 736-3640
STORM SEWER	CITY OF FRANKLIN, DPW	SALLY BROWN	(317) 736-3640
WATER	INDIANA AMERICAN WATER	RYAN MOORE	(317) 885-2404

0' 40' 80'

SCALE: 1"=40'

EXISTING LEGEND

- BEEHIVE INLET
- COMBINATION POLE
- ELECTRIC METER BOX
- GAS MARKER SIGN
- GUY WIRE
- HOSE BIB
- INLET
- MAILBOX
- PINE
- POST
- POWER POLE
- RIGHT OF WAY MONUMENT
- SIGN
- STAND PIPE
- STUMP
- SUB SURFACE DRAIN
- TEMPORARY BENCH MARK
- TEST HOLE
- TELEPHONE MARKER SIGN
- TELEPHONE PEDESTAL
- TRANSFORMER
- TREE
- VENT
- WELL

EROSION CONTROL LEGEND

- SILT FENCE
- CONSTRUCTION LIMITS
- INLET PROTECTION
- AREA SUBJECT TO TEMPORARY SEEDING DURING CONSTRUCTION AND PERMANENT SEEDING AFTER CONSTRUCTION IS COMPLETE (REFER TO LANDSCAPE PLANS)
- EROSION CONTROL BLANKET WITH SEEDING
- GRAVEL CONSTRUCTION ENTRANCE
- STAGING AREA
- CONCRETE WASHOUT
- DUMPSTER / RECYCLING AREA
- PORT-O-LET
- N.O.I. SIGN POSTING
- OUTLET PROTECTION
- ROCK DONUT
- ROCK CHECK DAM

STR A180
N: 183145.1
E: 830891.0

STR A190
N: 183542.2
E: 830842.9

STR A170
N: 182888.0
E: 830852.0

STORM STR 802

STORM STR 801

STORM STR 711

STORM STR 210

AMITY DITCH

APPROXIMATE LOCATION OF PROPOSED SANITARY MAIN EXTENSION CURRENTLY UNDER DESIGN BY MESSER ENGINEERING

APPX. FLOODWAY EXTENTS PER DNR FARA DETERMINATION GN03-7909

RMJ PARTNERSHIP LLC
S 600 E

RMJ PARTNERSHIP LLC
INSTRUMENT NO. 2019013908

PARCEL I
10.68 AC± (M)

KIMBERLY D. & DONALD R. JR. SMITH
INST. #2015-010379

25' SETBACK LINE

ZONE "A" PER FIRM MAP NO. 18081C0275D (EFFECTIVE AUGUST 2, 2007)

MATCH LINE "C505"
MATCH LINE "C503"

GENERAL NOTES:

1. CONTRACTOR SHALL PROTECT AND NOT DESTROY THE PROPERTY CORNER MONUMENTS DURING CONSTRUCTION.
2. CONTRACTOR TO VERIFY LOCATION, SIZE AND DEPTH OF EXISTING UTILITIES PRIOR TO COMMENCING ANY CONSTRUCTION. CONTACT ENGINEER IF VARIATION EXISTS.
3. SEE SHEET C002 GENERAL NOTES FOR MORE INFORMATION.

!! CAUTION !!

THE LOCATIONS OF ALL EXISTING UNDERGROUND UTILITIES SHOWN ON THIS PLAN ARE BASED UPON ABOVE GROUND EVIDENCE (including, but not limited to, manholes, inlets, valves, and marks made upon the ground by others) AND ARE SPECULATIVE IN NATURE. THERE MAY ALSO BE OTHER EXISTING UNDERGROUND UTILITIES FOR WHICH THERE IS NO ABOVE GROUND EVIDENCE OR FOR WHICH NO ABOVE GROUND EVIDENCE WAS OBSERVED. THE EXACT LOCATIONS OF SAID EXISTING UNDERGROUND UTILITIES SHALL BE VERIFIED BY THE CONTRACTOR PRIOR TO ANY AND ALL CONSTRUCTION.

CALL TOLL FREE
"811" OR 1-800-382-5544
– INDIANA UNDERGROUND –

GDI CONSTRUCTION
9775 Crosspoint Blvd
Suite 105
Indianapolis, IN 46256
317.567.6100

AMERICAN STRUCTUREPOINT INC.
9025 River Road, Suite 200 | Indianapolis, Indiana 46240
TEL 317.547.5580 | FAX 317.543.0270
www.structurepoint.com

I-65 SOUTH LOGISTICS CENTER LOT 1

81/89 Forest Road
Franklin, Indiana

JUSTIN ERIC OLAH
REGISTERED
PE 10002910
PROFESSIONAL ENGINEER
STATE OF INDIANA
NOT FOR CONSTRUCTION

CERTIFIED BY

ISSUANCE INDEX
DATE:
12/03/2020
PROJECT PHASE:
CONSTRUCTION DOCUMENTS

REVISION SCHEDULE		
NO.	DESCRIPTION	DATE

Project Number 2019.02798

EROSION CONTROL PLAN

C505

PLOT DATE: 12/3/2020 1:08 PM
PLOT SCALE: 1"=40'
EDIT DATE: 12/3/2020
EDITED BY: DWALLACE
DRAWING FILE: P:\2019\02798\D Drawings\Civil\Construction Documents\2019.02798 CE C501 ECP.dwg

SITE NAME

The area scheduled for construction is known as "I-65 South Logistics Center" (hereinafter referred to as the "Project").

PROJECT LOCATION

The property is located at the southeast corner of State Road 44 and Forest Road in Franklin, Indiana, at a latitude of 39°28'52" N and a longitude of 86°00'02" W.

OWNER'S INFORMATION

Name: GDI Construction
Address: 9775 Crosspoint Boulevard, Suite 105
Indianapolis, IN 46256
Representative: Phil Gross
Title: Preconstruction Manager
Telephone: (317) 567-6106

OPERATOR'S INFORMATION

Name: GDI Construction
Address: 9775 Crosspoint Boulevard, Suite 105
Indianapolis, IN 46256
Representative: Phil Gross
Title: Preconstruction Manager
Telephone: (317) 567-6106

NOTICE OF INTENT

All parties defined as owners or operators must submit a Notice of Intent (NOI) at least 48 hours prior to commencement of on-site construction activities. Submittal of late NOI's is not prohibited; however, authorization under the construction general permit is only for discharges that occur after permit coverage is granted. Unpermitted discharges may be subject to enforcement actions by the EPA. For the purposes of this permit, an operator is defined as any party meeting either of the following requirements:

a) The party has operational control over construction plans and specifications, including the ability to make modifications to those plans and specifications.
b) The party has day-to-day operational control of those activities at a project that are necessary to ensure compliance with a stormwater pollution prevention plan for the site or other permit conditions.

A2 11" x 17" PLAT

Refer to the Site Plan.

A3 PROJECT NARRATIVE

This project consists of the development of approximately 69 acres in Franklin, IN. The development includes the construction of one (1) industrial warehouse facility of 979,200 sf with associated infrastructure including, but not limited to the following activities: removal and stockpiling of topsoil, installation of sanitary sewers and laterals, water laterals, and other utilities, and installation of a wet detention pond. The site shall be paved and landscaped.

A4 VICINITY MAP

Refer to Title Sheet.

A5 LEGAL DESCRIPTION OF THE PROJECT SITE

Refer to Sheet C100 Overall Existing Topography and Demolition Plan

A6 LOCATION OF ALL LOTS AND PROPOSED SITE IMPROVEMENTS

The site will not be subdivided; therefore, there are no individual lots on the property. The proposed site improvements are shown on the included plans.

A7 HYDROLOGIC UNIT CODE (HUC)

05120204090070

A8 STATE AND FEDERAL WATER QUALITY PERMITS

IDEM Rule 5

A9 SPECIFIC POINT WHERE STORMWATER DISCHARGE WILL LEAVE THE SITE

Stormwater drainage from the site will be conveyed by a proposed storm sewer to a proposed wet detention pond located on the east side of the site. The wet detention pond will discharge to Amity Ditch.

A10 LOCATION AND NAME OF ALL WETLANDS, LAKES, AND WATERCOURSES ON AND ADJACENT TO THE SITE

No wetlands, lakes or watercourses have been identified on the site that may be impacted by stormwater discharges as a result of the proposed construction activities.

A11 IDENTIFICATION OF ALL RECEIVING WATERS

Amity Ditch is the ultimate receiving water for the project area.

A12 IDENTIFICATION OF ALL POTENTIAL DISCHARGES TO GROUND WATER

There are no locations on site where surface water may be discharged into ground water.

A13 100-YEAR FLOODPLAINS, FLOODWAYS, AND FLOODWAY FRINGES

The lot is located in an special flood hazard zone Flood Zone "A" (areas determined to be inside the 0.2 percent annual chance floodplain) as indicated on the Johnson County, Indiana Flood Insurance Rate Map 18081C0232D and 18081C0275D dated August 2, 2007.

A14 PRE-CONSTRUCTION AND POST-CONSTRUCTION ESTIMATE OF PEAK DISCHARGE

Pre-construction 10-year discharge: 13.51 cfs
Post-construction 10-year discharge: 6.29 cfs

A15 ADJACENT LAND USE

North: Agriculture
East: Agriculture
South: Agriculture
West: Agriculture

A16 LOCATIONS AND APPROXIMATE BOUNDARIES OF ALL DISTURBED AREAS

Approximate boundaries of disturbed areas are as identified on the Erosion Control Plan.

A17 IDENTIFICATION OF EXISTING VEGETATIVE COVER

Approximate areas of existing vegetative cover are as shown on the Existing Topography Plan.

A18 SOILS MAP INCLUDING SOIL DESCRIPTION AND LIMITATIONS

The Natural Resources Conservation Service (NRCS) Web Soil Survey of Johnson County, Indiana, indicates Brookston silty clay loam, Crosby silt loam, and Miami silt loam are located on the site.

The on-site soil will be treated as recommended by the geotechnical engineer if the conditions are unsuitable for the proposed construction. Remedial treatments may include, but are not limited to, removal of unsuitable soil and backfilling with engineered material, installation of a geofabric within or under the pavement system, or treatment of the subgrade with lime.

A19 LOCATIONS, SIZE, AND DIMENSIONS FOR PROPOSED STORMWATER SYSTEMS

Locations of stormwater systems: Refer to the Utility Plan or Storm Sewer Plan and Profiles
Size of storm sewer: Refer to the Utility Plan or Storm Sewer Plan and Profiles
Details of storm inlets and manholes: Refer to Site Details

A20 PLANS FOR ANY OFF-SITE CONSTRUCTION ACTIVITIES ASSOCIATED WITH THIS PROJECT

Offsite construction activity will include utility installation.

A21 LOCATIONS OF PROPOSED SOIL STOCKPILES AND/OR BORROW/DISPOSAL

Excess soil shall be immediately stockpiled, surrounded with silt fence and seeded and/or removed from the construction site in accordance with all applicable laws. If topsoil stockpiles are anticipated for this project, they are shown on the Erosion Control Plan.

A22 EXISTING SITE TOPOGRAPHY

Refer to the Existing Topography Plan.

A23 PROPOSED FINAL SITE TOPOGRAPHY

Refer to the Grading Plan.

B1 DESCRIPTION OF POTENTIAL POLLUTANT SOURCES ASSOCIATED WITH CONSTRUCTION ACTIVITIES

The following potential pollutant sources may be associated with construction activities on site:

1. Material storage areas (more specifically described below)
2. Construction waste material
3. Fuel storage areas and fueling stations
4. Exposed soils
5. Leaking vehicles and equipment
6. Sanitary waste from temporary toilet facilities
7. Litter
8. Windblown dust
9. Soil tracking off site from construction equipment

The following construction materials may be staged or stored on site at various points during development of the site:

1. Structural fill
2. Pavement Base Stone
3. HDPE, PVC, RCP or Ductile Iron pipe
4. Precast concrete, HDPE or PVC drainage and sanitary structures
5. Rock rip-rap

B2 SEQUENCE DESCRIBING STORMWATER QUALITY MEASURE IMPLEMENTATION RELATIVE TO LAND-DISTURBING ACTIVITIES

Preconstruction Activity
- The exact locations of all existing utilities within the project limits are to be verified prior to construction.
- Schedule pre-construction meeting with local stormwater authority.
- Install protection fencing for existing trees to remain in place within the project limits.
- Install protection fencing for existing karst in areas adjacent to project limits.

Construction Site Access
- Install gravel construction entrance.
- Post the NOI at the construction entrance.
- Install construction staging pads, fueling station, material storage areas, concrete washout, construction parking areas and stabilize construction routes.

Perimeter Controls
- Utilize the gravel construction entrance for installation of the perimeter silt fence. Add stone if needed.

Initial Land Clearing and Grading Activities
- Add protection measures to existing inlets.
- Strip the topsoil and stabilize the topsoil stockpile.

Secondary Land Grading Activities
- Begin site grading/construction of detention basins and stabilize any soil stockpiles that will be left dormant for more than 10 days.
- Complete the cut and fills on the site. Final grade and seed the pond slopes. Install check dams and stabilize slopes with erosion control blankets.
- Install storm sewer system and install inlet protection immediately upon completion of the inlet and install riprap outlet protection prior to installing outlets.

Surface Stabilization
- Apply temporary seeding and stabilize slopes in areas where rough grading has been completed.
- Apply permanent seeding and stabilize slopes in areas where final grading has been completed.

Building Construction
- Prior to building construction install stone surface for paved areas.
- Building pads left dormant for more than 10 days, must be temporarily seeded.
- Start building construction. Install staging area for building materials and stabilize.

Final Shaping/Landscaping
- Utilize topsoil salvage in applicable areas and apply permanent seeding.
- Apply permanent seeding the perimeter of the site.
- Complete utility installation, curbs, paving and building construction.
- Install landscaping plant material and stabilize all disturbed areas.
- Remove all erosion and sediment control practices when areas have a uniform grass cover.

B3 STABLE CONSTRUCTION ENTRANCE LOCATIONS AND SPECIFICATIONS

Construction entrances will be in place prior to any site construction or demolition. Entrances are shown on the Erosion Control Plan, refer to the Erosion Control Details for details.

B4 SEDIMENT CONTROL MEASURES FOR SHEET FLOW AREAS

Sheet flow areas will be protected by seed and mulch or hydroseeding. Erosion control blankets will be installed on sloped areas where the slope exceeds 6:1 (horizontal to vertical). Silt Fencing will be utilized to prevent sedimentation from leaving the site. Refer to the Erosion Control Plan for locations and the Erosion Control Details for details.

B5 SEDIMENT CONTROL MEASURES FOR CONCENTRATED FLOW AREAS

Proposed swales will be stabilized with erosion control blankets, and rock donuts will be installed to slow runoff to inlets. Straw bales and silt fences will not be allowed as concentrated flow protection measures. Refer to the Erosion Control Plan for locations and the Erosion Control Details for details.

B6 STORM SEWER INLET PROTECTION MEASURE LOCATIONS AND SPECIFICATIONS

The contractor shall install appropriate inlet protection measures at each inlet. Refer to the Erosion Control Plan for locations and the Erosion Control Details for details. Straw bales will not be allowed as inlet protection measures.

B7 RUNOFF CONTROL MEASURES

Runoff control measures will include silt fence and rock donuts.

B8 STORMWATER OUTLET PROTECTION SPECIFICATIONS

Stormwater outlets will be protected by riprap aprons to prevent scour erosion. Refer to the Erosion Control Plan for locations and the Erosion Control Details for details.

B9 GRADE STABILIZATION STRUCTURE LOCATIONS AND SPECIFICATIONS

Rip rap aprons at outlets will be utilized to prevent grade destabilization. Refer to the Erosion Control Plan for locations and the Erosion Control Details for details.

B10 LOCATION, DIMENSIONS, SPECIFICATIONS, AND CONSTRUCTION DETAILS OF EACH STORMWATER QUALITY MEASURE

Refer to the Erosion Control Plan for locations of each stormwater quality measure and the Erosion Control Details.

B11 TEMPORARY SURFACE STABILIZATION METHODS APPROPRIATE FOR EACH SEASON

Surface stabilization is required on any bare or thinly vegetated area that is scheduled or likely to remain inactive for a period of 15 days or more.
Refer to the Temporary Seeding Detail within Erosion Control Details for specifics on soil amendments, seed mixtures and mulching.

B12 PERMANENT SURFACE STABILIZATION SPECIFICATIONS

A. Loosen lawn area to a minimum depth of 6 inches. Mix soil amendments and fertilizers with topsoil at rates specified. Organic soil amendments such as peat, compost or manure shall be applied at 2" depth evenly over soil and incorporated into the top 6" of topsoil. Provide fertilizer with percentage of nitrogen required to provide not less than 1 pound of actual nitrogen per 1,000 sq. ft. of lawn area and not less than 4 percent phosphoric acid and 2 percent potassium. At least 50 percent of nitrogen to be organic form. Delay mixing of fertilizer if planting will not follow placing of planting soil within a few days.
B. Fertilizer for lawns: provide a fast release fertilizer with a composition of 1 lb per 1,000 sq. ft. of actual nitrogen, 4 percent phosphorous, and 2 percent potassium by weight.
C. Slow-release fertilizer for trees and shrubs: granular fertilizer consisting of 50 percent water-insoluble nitrogen, phosphorous and potassium made up of a composition by weight of 5 percent
D. Grade lawn and grass areas to a smooth, even surface with loose, uniformly fine texture. Limit fine grading to areas that can be planted within immediate future. Remove trash, debris, stones larger than 1 inch diameter, and other objects that may interfere with planting or maintenance operations. Sow seed using a spreader or seeding machine. Do not seed when wind velocity exceeds 5 miles per hour.
E. Distribute seed evenly over entire area by sowing equal quantity in 2 directions at right angles to each other.
F. Rake seed lightly into top 1/8 inch of soil, roll lightly, and water with a fine spray.
G. Install erosion control blankets as indicated on the plan.
H. Protect seeded areas against erosion by spreading clean, seed-free straw mulch after completion of seeding operations. Spread uniformly to form a continuous blanket not less than 1-1/2 inches loose measurements over seeded areas.
I. Water newly planted lawn areas and keep moist until new grass is established. Immediately repair any lawn areas disturbed by construction activities including tree and shrub installation.
J. Refer to the Permanent Seeding Details within the Erosion Control Detail Sheet, for timing of permanent seeding, grass seed specifications and mulching specifications.

B13 MATERIAL HANDLING AND SPILL PREVENTION PLAN

Solid Waste Disposal
No solid material, including building materials, is permitted to be discharged to surface waters or buried on site. All solid waste materials, including disposable materials incidental to the construction activity, must be collected in containers or closed dumpsters. The collection containers must be emptied periodically and the collected material hauled to a landfill permitted by the State and/or appropriate local municipality to accept the waste for disposal.

A foreman or supervisor should be designated in writing to oversee, enforce, and instruct construction workers on proper solid waste procedures.

Hazardous Waste
Whenever possible, minimize the use of hazardous materials and generation of hazardous wastes. All hazardous waste materials will be disposed in the manner specified by federal, state, or local regulations or by the manufacturer.

Use containment berms in fueling and maintenance areas and where potential for spills is high.

A foreman or supervisor should be designated in writing to oversee, enforce and instruct construction workers on proper hazardous waste procedures. The location of any hazardous waste storage areas should be indicated on the stormwater pollution prevention plan by the operator following on-site location of the facility.

Dust Control/Off-Site Vehicle Tracking
During construction, water trucks should be used, as needed, by each contractor or subcontractor to reduce dust. After construction, the site should be stabilized to reduce dust.

Construction traffic should enter and exit the site at a Construction Entrance with a rock pad or equivalent device. The purpose of the rock pad is to minimize the amount of soil and mud that is tracked onto existing streets. If sediment escapes the construction site, off-site accumulations of sediment must be removed at a frequency sufficient to minimize offsite impacts.

Sanitary/Septic
Contractors and subcontractors must comply with all state and local sanitary sewer, portable toilet, or septic system regulations. Sanitary facilities shall be provided at the site by each contractor or subcontractor throughout construction activities. The sanitary facilities should be utilized by all construction personnel and be serviced regularly. All expenses associated with providing sanitary facilities are the responsibility of the contractors and subcontractors. The location of any sanitary facilities should be indicated on the stormwater pollution prevention plan by the operator following on-site location of said facilities.

Water Source
Water used to establish and maintain grass, to control dust, and for other construction purposes must originate from a public water supply or private well approved by the State or local health department.

Equipment Fueling and Storage Areas
Equipment fueling, maintenance, and cleaning should only be completed in protected areas (i.e., bermed area). Leaking equipment and maintenance fluids will be collected and not allowed to discharge onto soil where they may be washed away during a rain event.

Equipment wash down (except for wheel washes) should take place within an area surrounded by a berm. The use of detergents is prohibited.

Hazardous Material Storage
Chemicals, paints, solvents, fertilizers, and other toxic or hazardous materials should be stored in their original containers (if original container is not resealable, store the products in clearly labeled, waterproof containers). Except during application, the containers should be kept in trucks or in bermed areas within covered storage facilities. Runoff containing such materials shall be collected, removed from the site, and disposed of in accordance with the federal, state, and local regulations.

As may be required by federal, state or local regulations, the Contractor should have a Hazardous Materials Management Plan and/or Hazardous Materials Spill and Prevention Program in place. A foreman or supervisor should be designated in writing to oversee, enforce, and instruct construction workers on proper hazardous materials storage and handling procedures. The location of any hazardous material storage areas should be indicated on the stormwater pollution prevention plan by the operator following on-site location of the storage areas.

Material Handling and Spill Prevention
Discharge of hazardous substances or oil into stormwater is subject to reporting requirements. In the event of a spill of a hazardous substance, the operator is required to notify the National Response Center (1-800-424-8802) to properly report the spill. In addition, the operator shall submit a written description of the release (including the type and amount of material released, the date of the release, the circumstances of the release, and the steps to be taken to prevent future spills) to the local governing authority. The SWPPP must be revised within 14 calendar days after the release to reflect the release, stating the information above along with modifications to minimize the possibility of future occurrences. Each contractor and subcontractor is responsible for complying with these reporting requirements.

Concrete Washout
All concrete trucks waste material shall be completely contained and disposed in accordance with all local, state, and federal regulations. A pit or container is required when cleaning concrete chutes.

Spill Response Plan
Minor – Small spills that typically involve oil, gasoline, paint, hydraulic fluid, etc., can be controlled by the first responder at the discovery of the spill.
- Contain spill to prevent material from entering storm or ground water. Do not flush with water or bury.
- Use absorbent material to clean-up spill material and any subsequently contaminated soil and dispose of properly.

Semi-Significant Spills – Approximately ten gallons or less of pollutant with no contamination of ground or surface waters. Minor spills can be generally controlled by the first responder with help from other site personnel. This response may require other operations to stop to make sure the spill is quickly and safely addressed. At the discovery of the spill:
- Contain spill to prevent material from entering storm or ground water. Do not flush with water or bury.
- Use absorbent material to clean-up spills and dispose of properly. Spills on impervious surfaces should be disposed of as soon as possible to prevent migration deeper into the soil and groundwater. Dispose of contaminated soils or absorbents properly.
- Contact 911 if the spill could be a safety issue.
- Contact supervisors and designated site inspectors immediately.
- Contaminated solids are to be removed to an approved landfill.

Major or Hazardous Spills – More than ten gallons, there is the potential for death, injury or illness to humans or animals, or has the potential for surface or groundwater pollution.
- Control or contain the spill without risking bodily harm. Temporarily plug storm drains if possible to prevent migration of the spill into the stormwater system.
- Immediately contact the local Fire Department at 911 to report any hazardous material spill.
- Contact supervisors and designated site inspectors immediately. Governing authorities responsible for storm water facilities should be contacted as well. The contractor is responsible for having these contact numbers available at the job site. A written report should be submitted to the owner as soon as possible.
- As soon as possible but within 2 hours of discovery, contact the local agency responsible for spill management. The following information should be noted for future reports to the agency:
  - Name, address and phone number of person making the spill report
  - The location of the spill
  - The time of the spill
  - Identification of the spilled substance
  - Approximate quantity of the substance that has been spilled or may be further spilled
  - The duration and source of the spill
  - Name and location of the damaged waters
  - Name of spill response organization
  - What measures were taken in the spill response
  - Other information that may be significant

Additional regulations or requirements may be present. A spill response professional should be consulted to make sure all appropriate and required steps have been taken. Contaminated solids should only be removed from the site after approval is given by the appropriate agency.

B14 MONITORING AND MAINTENANCE GUIDELINES FOR EACH PROPOSED STORMWATER QUALITY MEASURE

Inspection Schedule/Reporting
All impacted areas, as well as all erosion and sediment control devices, will be inspected every seven (7) calendar days and within 24 hours after a rainfall of 0.5 inch or greater. Where sites have been final or temporarily stabilized or on sites where runoff is unlikely due to winter conditions (e.g., site is covered with snow, ice, or frozen ground exists), such inspections shall be conducted at least once every month.

Inspections shall be conducted and a written report prepared, by a designated and qualified person familiar with the USEPA NPDES Storm Water General Permit, this SWPPP, and the Project.

Inspection reports shall be completed including scope of the inspection, name(s) and qualifications of personnel making the inspection, the date of the inspection, observations relating to the implementation of the SWPPP, and any actions taken as a result of incidents of noncompliance noted during the inspection. The inspection report should state whether the site was in compliance or identify any incidents of noncompliance. The contractor shall keep a copy of the inspection reports on site and permanently for a period of two years following construction. The on-site reports may be requested by inspections conducted by the local governing authority.

Construction Entrance
Locations where vehicles exit the site shall be inspected for evidence of off-site sediment tracking. Each contractor and subcontractor shall be responsible for maintaining the Construction Entrance and other controls as described in this SWPPP.

Material Storage Inspections
Inspectors must evaluate areas used for storage of materials that are exposed to precipitation. The purpose is to ensure that materials are protected and/or impounded so that pollutants cannot discharge from storage areas. Off-site material storage areas used solely by the subject project are considered to be part of the project and must be included in the erosion control plans and the site inspection reports.

Soil Stabilization Inspections
Seeded areas will be inspected to confirm that a healthy stand of vegetation is maintained. The site has achieved final stabilization once all areas are covered with pavement or have a stand of vegetation with at least 70% of the background vegetation density. The density of 70% or greater must be maintained to be considered as stabilized. The operator or their representative will water, fertilize, and reseed disturbed areas as needed to achieve this goal.

Erosion and Sediment Control Inspections
All controls should be inspected at least once every seven (7) calendar days and following any storm event of 0.5 inch or greater. The following is a list of inspection/maintenance practices that will be used for specific controls:

1. Geotextiles/Erosion Control Mats: Missing or loose matting must be replaced or re-anchored.
2. Inlet Protection: If silt fence inlet protection is to be used, sediment should be removed when it reaches approximately one-half the height of the fence. If a sump is used, sediment should be removed when the volume of the basin is reduced by 50%.
3. Diversion Swales: Clean debris or other obstructions as needed. Damage from storms or normal construction activities (i.e., tire ruts) shall be repaired immediately.
4. Mulching: Inspect for thin or bare spots caused by natural decomposition or weather-related events. Mulch in high traffic areas should be replaced on a regular basis to maintain uniform protection.
5. Sediment Trap: Accumulated silt shall be removed and the basin shall be re-graded to its original dimensions at such point that the capacity of the impoundment has been reduced to one-half of its original storage capacity. The removed sediment shall be stockpiled or redistributed in areas that are protected from erosion.
6. Sediment Basin: Inspect frequently to check for damage and to ensure obstructions are not diminishing the effectiveness of the structures. Sediment shall be removed and the basin shall be re-graded to its original dimensions at such point that the capacity of the impoundment has been reduced to 20% of its original storage capacity. The removed sediment shall be stockpiled or redistributed in areas that are protected from erosion.
7. Silt Fence: Removal of built-up sediment will occur when the sediment reaches one-third the height of the fence.
8. Stabilized Construction Entrance: Periodic re-grading and top dressing with additional stone.
9. Straw Bales: Replace straw bales that show signs of deterioration.
10. Vegetation: Protect newly seeded areas from excessive runoff and traffic until vegetation is established. Establish a watering and fertilizing schedule.
11. Good Housekeeping: Litter, construction debris, and construction chemicals exposed to stormwater shall be prevented from becoming a pollutant source for stormwater discharges through screening of outfalls and daily pickup of litter.

In the event that sediment escapes the construction site, off-site accumulations of sediment must be removed at a frequency sufficient to minimize adverse impacts. An example of this may be the situation where sediment has washed into the street and could be carried into the storm sewers by the next rainfall and/or pose a safety hazard to users of public streets. Modifications/Revisions to SWPPP.

Based on inspection results, any necessary modification to this SWPPP shall be implemented within seven calendar days of the inspection. A modification is necessary if a control measure or operational procedure does not provide adequate pollutant control. All revisions shall be recorded on a Record of Revisions within seven calendar days of the inspection.

It is the responsibility of the operator to maintain effective pollutant discharge controls. Physical site conditions or contractor/subcontractor practices could make it necessary to install more controls than were originally planned. For example, localized concentrations of surface runoff or unusually steep areas could require additional silt barrier or other structural controls. Assessing the need for and installing additional controls will be a continuing contractor/subcontractor responsibility until final stabilization is achieved. Contractors and subcontractors implementing this SWPPP must remain alert to the need to periodically refine and update this SWPPP in order to accomplish the intended goals.

Notice of Termination
Compliance of the site with the General Construction Permit remains the responsibility of all operators that have submitted an NOI until such time as they have submitted a Notice of Termination (NOT). The permittee's authorization to discharge under the General Construction Permit terminates at midnight of the day the NOT is signed.

All permittees must submit an NOT within thirty (30) days after one or more of the following conditions have been met:

1. Final stabilization has been achieved on all portions of the site for which the permittee was responsible.
2. Another operator/permittee has assumed control over all areas of the site that have not been finally stabilized.
3. In residential construction operations, temporary stabilization has been completed and the residence has been transferred to the homeowner.

B15 EROSION AND SEDIMENT CONTROL SPECIFICATIONS FOR INDIVIDUAL BUILDING LOTS

Since the entire site is under a single ownership, there are not any individual building lots.

C1 DESCRIPTION OF POLLUTANTS AND THEIR SOURCES ASSOCIATED WITH THE PROPOSED LAND USE

The proposed land use is an industrial warehouse. The pollutants and sources of each pollutant normally expected from this type of land use are listed below:

Pollutant Source: Passenger vehicles, delivery vehicles.
Type of Pollutant: Oil, gasoline, diesel fuel, any hydrocarbon associated with vehicular fuels and lubricants, grease, antifreeze, windshield cleaner solution, brake fluid, brake dust, rubber, glass, metal and plastic fragments, grit, road de-icing materials.

Pollutant Source: Building
Type of Pollutant: Cleaning solutions or solvents, leaks from HVAC equipment, grit from roof drainage, aggregate or rubber fragments from roofing system.

Pollutant Source: Trash dumpster
Type of Pollutant: Cleaning solutions or solvents, litter (paper, plastic, general refuse associated with distribution operations), uneaten food products, bacteria.

Pollutant Source: Parking lot
Type of Pollutant: Any pollutant associated with vehicular sources, grit from asphalt wearing surface, bituminous compounds from periodic maintenance (sealing, resurfacing and patching), pavement de-icing materials, paint fragments from parking stall stripes, concrete fragments, wind-blown litter from off-site sources, elevated water temperatures from contact with impervious surfaces.

Pollutant Source: Lawn and landscape areas
Type of Pollutant: Fertilizers, soil, organic material (leaves, mulch, grass clippings)

C2 SEQUENCE DESCRIBING STORMWATER QUALITY MEASURE IMPLEMENTATION

The stormwater detention pond will remain in place as permanent features after construction is completed. The purpose of the these measures is to restrict stormwater discharges and provide a sediment removal function.

C3 DESCRIPTION OF PROPOSED POST-CONSTRUCTION STORMWATER QUALITY MEASURES

Wet Detention Pond
A wet detention pond detains storm water runoff long enough for contaminated sediments to settle and remain in the pond and allow the water in the pond to be displaced by the next rain event. The sedimentation process removes particulates, organic matter, and metals from the water while nutrients are removed through biological uptake. By capturing and retaining runoff, wet ponds control both storm water quality and quantity.

Good Housekeeping Measures
Good Housekeeping measures such as regular street sweeping, installation of trash receptacles, and reduction in fertilizer overspray can be incorporated by the owner and/or occupant.

C4 LOCATION, DIMENSIONS, SPECIFICATIONS, AND CONSTRUCTION DETAILS OF EACH STORMWATER QUALITY MEASURE

The following items are stormwater quality measures that will be installed during construction. These items will remain in place after construction is completed and are considered to serve an incidental function as post-construction stormwater quality BMPs.

The proposed wet detention pond will be located on the east side of the site.

C5 DESCRIPTION OF MAINTENANCE GUIDELINES FOR POST-CONSTRUCTION STORMWATER QUALITY MEASURES

Maintenance requirements for the stormwater quality measures which will remain in place after construction is complete, are described below. Refer to the BMP Operations and Maintenance Manual for more detailed maintenance requirements.

Detention Ponds (Wet or Dry)
Inspect periodically as needed or at least every six months. Sediment shall be disposed of off site in accordance with all applicable laws. Areas that show sign of erosion shall be stabilized with erosion control blanket and/or seed as necessary.

GDI CONSTRUCTION
9775 Crosspoint Blvd
Suite 105
Indianapolis, IN 46256
317.567.6100

AMERICAN STRUCTUREPOINT INC.
9025 River Road, Suite 200 | Indianapolis, Indiana 46240
TEL 317.547.5580 | FAX 317.543.0270
www.structurepoint.com

I-65 SOUTH LOGISTICS CENTER LOT 1

81/89 Forest Road
Franklin, Indiana



CERTIFIED BY

ISSUANCE INDEX
DATE:
12/03/2020
PROJECT PHASE:
CONSTRUCTION DOCUMENTS

REVISION SCHEDULE		
NO.	DESCRIPTION	DATE

Project Number 2019.02798

STORM WATER POLLUTION PREVENTION PLAN

C510

PLOT DATE: 12/3/2020 1:08 PM
PLOT SCALE: 1:2.5849
EDIT DATE: 12/2/2020
EDITED BY: MRVING
DRAWING FILE: P:\2019\02798\D Drawings\Civil\Construction Documents\2019.02798 GE C510 SWPPP.dwg

SPECIFICATIONS
CONTRIBUTING DRAINAGE AREA
- TWO ACRES MAXIMUM..

RIPRAP CHECK DAM
- DAM HEIGHT – TWO FEET MAXIMUM; CENTER OF THE DAM TO BE AT LEAST NINE INCHES LOWER THAN THE POINTS OF CONTACT BETWEEN THE UPPERMOST POINTS OF THE RIPRAP DAM AND CHANNEL BANKS.
- SIDE SLOPE – RATIO OF 2:1 OR FLATTER.
- SPACING – TOE OF THE UPSTREAM DAM AT SAME ELEVATION AS OVERFLOW WEIR OF THE DOWNSTREAM DAM.

OVERFLOW AREAS
- STABILIZED TO REDUCE SCOUR/EROSION ALONG SIDES AND BELOW THE DAM.

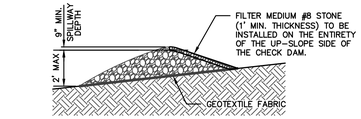
FILTER MEDIUM
- PLACED ON UP–SLOPE SIDE OF DAM.
- HEIGHT – TO BASE OF OVERFLOW WEIR NOTCH.

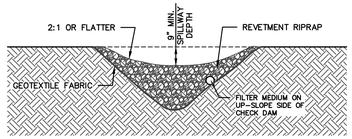
MATERIALS
- GEOTEXTILE FABRIC (8 OUNCE OR HEAVIER; NON–WOVEN).
- INDIANA DEPARTMENT OF TRANSPORTATION REVETMENT RIPRAP FOR DAM.
- INDOT CA NO. 5 AGGREGATE FOR USE AS FILTER MEDIUM (AGGREGATE MUST BE WELL–GRADED).

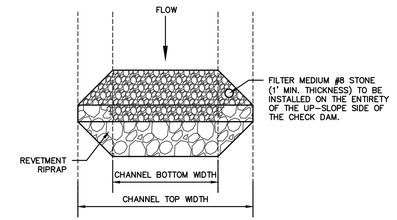
NOTE: INDOT CA NO. 8 AGGREGATE IS ACCEPTABLE IF NO. 5 IS NOT AVAILABLE. THE USE OF NO. 8 AGGREGATE MAY RESULT IN MORE FREQUENT OVERTOPPING OF THE STRUCTURE AND WILL INCREASE THE FREQUENCY OF STRUCTURE MAINTENANCE.

INSTALLATION
1. LAY OUT THE LOCATION OF THE CHECK DAM.
2. EXCAVATE A CUTOFF TRENCH INTO THE CHANNEL BOTTOM AND DITCH BANKS, EXTENDING IT A MINIMUM OF 18 INCHES BEYOND THE TOP OF THE DITCH BANK.
3. INSTALL AND ANCHOR FILTER FABRIC IN THE CHANNEL AND CUTOFF TRENCH.
4. PLACE RIPRAP IN THE CUTOFF TRENCH AND CHANNEL TO THE LINES AND DIMENSIONS SHOWN IN THE CONSTRUCTION PLANS. THE CENTER OF EACH DAM MUST BE AT LEAST NINE INCHES LOWER THAN THE UPPERMOST POINTS OF CONTACT BETWEEN THE RIPRAP DAM AND CHANNEL BANKS.
5. EXTEND THE RIPRAP AT LEAST 18 INCHES BEYOND THE TOP OF THE CHANNEL BANKS TO KEEP OVERFLOW FROM ERODING AREAS ADJACENT TO THE CHANNEL BANKS BEFORE IT RE–ENTERS THE CHANNEL.
6. PLACE FILTER MEDIUM (INDOT CA NO. 5 AGGREGATE) ON THE UP–SLOPE SIDE OF THE DAM. PLACE FILTER MEDIUM OVER THE ENTIRE FACE OF THE DAM UP TO THE BASE OF THE OVERFLOW WEIR NOTCH.
7. STABILIZE THE CHANNEL ABOVE THE UPPERMOST DAM.
8. INSTALL AN EROSION–RESISTANT LINING IN THE CHANNEL BELOW THE LOWERMOST DAM. THE LINING SHOULD EXTEND A MINIMUM DISTANCE OF SIX FEET BELOW THE DAM.
9. ADDITIONAL SEDIMENT STORAGE CAN BE PROVIDED BY EXCAVATING A SMALL SEDIMENT TRAP ON THE UPSTREAM SIDE OF THE CHECK DAM.

MAINTENANCE
- INSPECT WITHIN 24 HOURS OF EACH RAIN EVENT AND AT LEAST ONCE EVERY SEVEN CALENDAR DAYS.
- IF SIGNIFICANT EROSION OCCURS BETWEEN DAMS, INSTALL AN EROSION–RESISTANT LINER IN THAT PORTION OF THE CHANNEL.
- REMOVE ACCUMULATED SEDIMENT WHEN IT REACHES ONE–HALF THE HEIGHT OF THE DAM TO MAINTAIN CHANNEL CAPACITY, ALLOW DRAINAGE THROUGH THE DAM, AND PREVENT LARGE FLOW FROM DISPLACING SEDIMENT.
- ADD RIPRAP AND AGGREGATE AS NEEDED TO MAINTAIN DESIGN HEIGHT AND CROSS SECTION OF THE DAMS.
- WHEN DAMS ARE NO LONGER NEEDED, REMOVE THE RIPRAP AND AGGREGATE AND STABILIZE THE CHANNEL, USING AN EROSION–RESISTANT LINING IF NECESSARY. (RIPRAP AND AGGREGATE FROM THE DAM MAY BE REMOVED OR UTILIZED TO STABILIZE THE CHANNEL.)







NOTE: DO NOT USE CHECK DAMS IN PERENNIAL STREAMS.

ROCK CHECK DAM
NOT TO SCALE (REV. 03/18)

SPECIFICATIONS
DRAINAGE AREA
- LIMITED TO ONE–QUARTER ACRE PER 100 LINEAR FEET OF FENCE.
- FURTHER RESTRICTED BY SLOPE STEEPNESS (SEE TABLE 1).

EFFECTIVE LIFE
- SIX MONTHS (MAXIMUM).

LOCATION
- INSTALLED PARALLEL TO THE SLOPE CONTOUR.
- MINIMUM OF 10 FEET BEYOND THE TOE OF THE SLOPE TO PROVIDE A BROAD, SHALLOW SEDIMENT POOL.
- ACCESSIBLE FOR MAINTENANCE (REMOVAL OF SEDIMENT AND SILT FENCE REPAIR).

SPACING
TABLE 1. SLOPE STEEPNESS RESTRICTIONS

PERCENT SLOPE		MAXIMUM DISTANCE
< 2%	< 50:1	100 FEET
2% – 5%	50:1 TO 20:1	75 FEET
5% – 10%*	20:1 TO 10:1	50 FEET
10% – 20%*	10:1 TO 5:1	25 FEET
> 20%	> 5:1	15 FEET

*CONSIDER OTHER ALTERNATIVES.
NOTE: MULTIPLE ROWS OF SILT FENCE ARE NOT RECOMMENDED ON THE SAME SLOPE.

TRENCH
- DEPTH: EIGHT INCHES MINIMUM.
- WIDTH: FOUR INCHES MINIMUM.
- AFTER INSTALLING THE FENCE, BACKFILL WITH SOIL MATERIAL AND COMPACT (TO BURY AND ANCHOR THE LOWER PORTION OF THE FENCE FABRIC).

NOTE: AN ALTERNATIVE TO TRENCHING IS TO USE MECHANICAL EQUIPMENT TO PLOW IN THE SILT FENCE.

MATERIALS AND SILT FENCE SPECIFICATIONS
- FABRIC – WOVEN OR NON–WOVEN GEOTEXTILE FABRIC, MEETING SPECIFIED MINIMUMS OUTLINED IN TABLE 2.

TABLE 2. GEOTEXTILE FABRIC SPECIFICATIONS FOR SILT FENCE (MINIMUM)

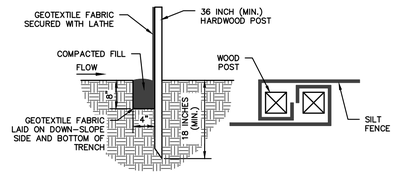
PHYSICAL PROPERTY	WOVEN GEOTEXTILE FABRIC	NON–WOVEN GEOTEXTILE FABRIC
FILTERING EFFICIENCY	85%	85%
TEXTILE STRENGTH AT 20% ELONGATION STANDARD STRENGTH EXTRA STRENGTH	 30 LBS. PER LINEAL INCH 50 LBS. PER LINEAL INCH	 50 LBS. PER LINEAL INCH 70 LBS. PER LINEAL INCH
SLURRY FLOW RATE	0.3 GAL./MIN./SQUARE FOOT	4.5 GAL./MIN./SQUARE FOOT
WATER FLOW RATE	15 GAL./MIN./SQUARE FOOT	220 GAL./MIN./SQUARE FOOT
UV RESISTANCE	70%	85%
POST SPACING	7 FEET	5 FEET

NOTE: SILT FENCES CAN BE PURCHASED COMMERCIALLY.
- HEIGHT – A MINIMUM OF 18 INCHES ABOVE GROUND LEVEL (30 INCHES MAXIMUM).
- REINFORCEMENT – FABRIC SECURELY FASTENED TO POSTS WITH WOOD LATHE.
- SUPPORT POSTS – 2x2 INCH HARDWOOD POSTS. STEEL FENCE POSTS MAY BE SUBSTITUTED FOR HARDWOOD POSTS (STEEL POSTS SHOULD HAVE PROJECTIONS FOR FASTENING FABRIC).
- SPACING – EIGHT FEET MAXIMUM IS FENCE IS SUPPORTED BY WIRE MESH FENCING, SIX FEET MAXIMUM FOR EXTRA–STRENGTH FABRIC WITHOUT WIRE BACKING.

INSTALLATION
1. LAY OUT THE LOCATION OF THE FENCE SO THAT IS IS PARALLEL TO THE CONTOUR OF THE SLOPE AND AT LEAST 10 FEET BEYOND THE TOE OF THE SLOPE TO PROVIDE A SEDIMENT STORAGE AREA. TURN THE ENDS OF THE FENCE UP SLOPE SUCH THAT THE POINT OF CONTACT BETWEEN THE GROUND AND THE BOTTOM OF THE FENCE END TERMINATES AT A HIGHER ELEVATION THAN THE TOP OF THE FENCE AT ITS LOWEST POINT.
2. EXCAVATE AN EIGHT–INCH DEEP BY FOUR–INCH WIDE TRENCH ALONG THE ENTIRE LENGTH OF THE FENCE LINE. INSTALLATION BY PLOWING IS ALSO ACCEPTABLE.
3. INSTALL THE SILT FENCE WITH THE FILTER FABRIC LOCATED ON THE UP–SLOPE SIDE OF THE EXCAVATED TRENCH AND THE SUPPORT POSTS ON THE DOWN–SLOPE SIDE OF THE TRENCH.
4. DRIVE THE SUPPORT POSTS AT LEAST 18 INCHES INTO THE GROUND, TIGHTLY STRETCHING THE FABRIC BETWEEN THE POSTS AS EACH IS DRIVEN INTO THE SOIL. A MINIMUM OF 12 INCHES OF THE FILTER FABRIC SHOULD EXTEND INTO THE TRENCH. (IF IT IS NECESSARY TO JOIN THE ENDS OF TWO FENCES, USE THE JOINT METHOD SHOWN.
5. LAY THE FOUR INCHES OF FILTER FABRIC ON THE BOTTOM OF THE TRENCH AND EXTEND IT TOWARD THE UP–SLOPE SIDE OF THE TRENCH.
6. BACKFILL THE TRENCH WITH SOIL MATERIAL AND COMPACT IT IN PLACE.

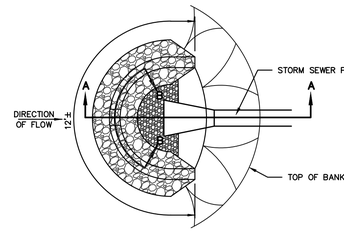
NOTE: IF THE SILT FENCE IS BEING CONSTRUCTED ON–SITE, ATTACH THE FILTER FABRIC TO THE SUPPORT POSTS (REFER TO TABLES 1 AND 2 FOR SPACING AND GEOTEXTILE SPECIFICATIONS) AND ATTACH WOODEN LATHE TO SECURE THE FABRIC TO THE POSTS. ALLOW FOR AT LEAST 12 INCHES OF FABRIC BELOW GROUND LEVEL. COMPLETE THE SILT FENCE INSTALLATION, FOLLOWING STEPS 1 THROUGH 6 ABOVE.

MAINTENANCE
- INSPECT WITHIN 24 HOURS OF A RAIN EVENT AND AT LEAST ONCE EVERY SEVEN CALENDAR DAYS.
- IF FENCE FABRIC TEARS, STARTS TO DECOMPOSE, OR IN ANY WAY BECOMES INEFFECTIVE, REPLACE THE AFFECTED PORTION IMMEDIATELY. ALL REPAIRS SHOULD MEET SPECIFICATIONS AS OUTLINED WITHIN THIS MEASURE.
- REMOVE DEPOSITED SEDIMENT WHEN IT IS CAUSING THE FILTER FABRIC TO BULGE OR WHEN IT REACHES ON–HALF THE HEIGHT OF THE FENCE AT ITS LOWEST POINT. WHEN CONTRIBUTING DRAINAGE AREA HAS BEEN STABILIZED, REMOVE THE FENCE AND SEDIMENT DEPOSITS, GRADE THE SITE TO BLEND WITH THE SURROUNDING AREA, AND STABILIZE.

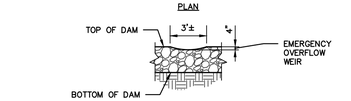


NOTE: SILT FENCE IS NOT RECOMMENDED FOR USE AS A DIVERSION AND SHOULD NOT BE USED ACROSS A STREAM, CHANNEL, DITCH, SWALE, OR ANYWHERE THAT CONCENTRATED FLOW IS ANTICIPATED.

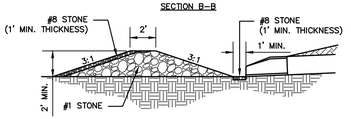
SILT FENCE CONSTRUCTION
NOT TO SCALE (REV. 01/17)



PLAN



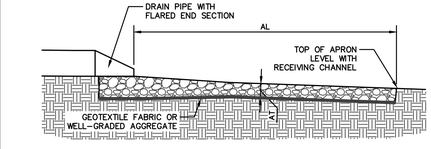
SECTION B–B



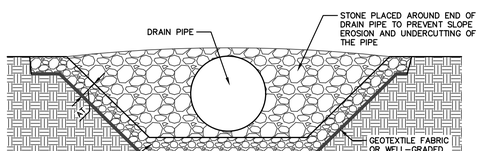
SECTION A–A

MAINTENANCE
- INSPECT WITHIN 24 HOURS OF A RAIN EVENT AND AT LEAST ONCE EVERY SEVEN CALENDAR DAYS.
- WHEN THE CONTRIBUTING DRAINAGE AREA HAS BEEN STABILIZED, REMOVE AND PROPERLY DISPOSE OF ANY UNSTABLE SEDIMENT AND CONSTRUCTION MATERIAL, AND RE–STABILIZE.

ROCK DONUT DETAIL
NOT TO SCALE (REV. 01/17)



NOTE: AW IS THE APRON WIDTH AT THE NARROW END OF THE APRON.



SPECIFICATIONS
CAPACITY
- PEAK RUNOFF FROM A 10–YEAR FREQUENCY, 24–HOUR STORM EVENT OR THE DESIGN DISCHARGE OF THE WATER CONVEYANCE STRUCTURE, WHICHEVER IS GREATER.

MAXIMUM VELOCITY
- TEN FEET PER SECOND.

APRON
- ALIGNED STRAIGHT WITH CHANNEL FLOW. IF A CURVE IS NECESSARY TO ALIGN THE APRON WITH THE RECEIVING STREAM, LOCATE THE CURVE IN THE UPSTREAM SECTION OF THE APRON.
- THICKNESS
  - ** 1.2 TIMES THE MAXIMUM STONE DIAMETER FOR A d_{50} STONE SIZE OF 15 INCHES OR LARGER.
  - ** 1.5 TIMES THE MAXIMUM STONE DIAMETER FOR A d_{50} STONE SIZE OF 15 INCHES OR LESS.

TABLE 1. SIZING FOR FLOW DISSIPATERS AT CULVERT PIPE OUTLETS

PIPE SIZE	MEDIAN RIPRAP DIAMETER	APRON WIDTH*	APRON LENGTH**
8 IN.	6 IN. MIN.	2 TO 3 FT.	5 TO 7 FT.
12 IN.	6 IN. MIN.	3 TO 4 FT.	6 TO 10 FT.
15 IN.	6 IN. MIN.	4 TO 6 FT.	6 TO 12 FT.
18 IN.	6 IN. MIN.	4 TO 6 FT.	8 TO 16 FT.
21 IN.	6 IN. MIN.	6 TO 8 FT.	8 TO 16 FT.
24 IN.	9 IN. MIN.	6 TO 8 FT.	12 TO 18 FT.
30 IN.	9 IN. MIN.	8 TO 10 FT.	14 TO 20 FT.
36 IN.	9 IN. MIN.	10 TO 12 FT.	16 TO 22 FT.
42 IN.	9 IN. MIN.	12 TO 14 FT.	18 TO 24 FT.
48 IN.	12 IN. MIN.	12 TO 14 FT.	18 TO 26 FT.
54 IN.	12 IN. MIN.	14 TO 16 FT.	22 TO 28 FT.
60 IN.	12 IN. MIN.	15 TO 17 FT.	22 TO 32 FT.
66 IN.	12 IN. MIN.	17 TO 19 FT.	24 TO 36 FT.
72 IN.	12 IN. MIN.	18 TO 20 FT.	26 TO 40 FT.
84 IN.	18 IN. MIN.	21 TO 23 FT.	30 TO 44 FT.

*APRON WIDTH AT THE NARROW END OF APRON (PIPE OR CHANNEL OUTLET).
**SELECT LENGTH TAKING INTO CONSIDERATION THE LOW FLOW (NO PRESSURE HEAD) OR HIGH FLOW (PRESSURE HEAD) CONDITIONS OF THE CULVERT PIPE.

MATERIALS
- RIPRAP
  - ** HARD, ANGULAR, HIGHLY WEATHER RESISTANT.
  - ** SPECIFIC GRAVITY OF AT LEAST 2.5.
  - ** SIZE AND GRADATION THAT WILL WITHSTAND VELOCITIES OF STORM WATER DISCHARGE FLOW DESIGN.
  - ** WELL–GRADED MIXTURE OF STONE WITH 50 PERCENT OF THE STONE PIECES, BY WEIGHT, LARGER THAN THE d_{50} SIZE AND THE DIAMETER OF THE LARGEST STONE EQUAL TO 1.5 TIMES THE d_{50} SIZE.
- GEOTEXTILE FABRIC OR WELL–GRADED AGGREGATE (INDOT CA NO. 9, 11, OR 12).

INSTALLATION
1. DIVERT SURFACE WATER RUNOFF AROUND THE STRUCTURE DURING CONSTRUCTION SO THAT THE SITE CAN BE PROPERLY DEWATERED FOR FOUNDATION PREPARATION.
2. EXCAVATE FOUNDATION AND APRON AREA SUBGRADES BELOW DESIGN ELEVATION TO ALLOW FOR THIS THICKNESS OF FILTER MEDIUM AND RIPRAP.
3. COMPACT ANY FILL USED IN SUBGRADE PREPARATION TO THE DENSITY OF SURROUNDING UNDISTURBED SOIL MATERIAL.
4. SMOOTH SUBGRADE ENOUGH TO PROTECT GEOTEXTILE FABRIC FROM TEARING.
5. PLACE GEOTEXTILE FABRIC OR AGGREGATE BEDDING MATERIAL (FOR STABILIZATION AND FILTRATION) ON THE COMPACTED AND SMOOTHED FOUNDATION.
6. INSTALL RIPRAP TO THE LINES AND ELEVATIONS SHOWN IN THE CONSTRUCTION PLANS. BLEND RIPRAP SMOOTHLY TO SURROUNDING GRADE. IF THE CHANNEL IS WELL DEFINED, EXTEND THE APRON ACROSS THE CHANNEL BOTTOM AND UP THE CHANNEL BANKS TO AN ELEVATION OF SIX INCHES ABOVE THE MAXIMUM TAILWATER DEPTH OR THE TOP OF THE BANK, WHICHEVER IS LESS.
7. IF GEOTEXTILE FABRIC TEARS WHEN PLACING RIPRAP, REPAIR IMMEDIATELY BY LAYING AND STAPLING A PIECE OF FABRIC OVER DAMAGED AREA, OVERLAPPING THE UNDAMAGED AREAS BY AT LEAST 12 INCHES.
8. CONSTRUCT A SMALL PLUNGE POOL WITHIN THE OUTLET APRON. (RIPRAP APRONS MUST BE LEVEL WITH OR SLIGHTLY LOWER THAN THE RECEIVING CHANNEL AND SHOULD NOT PRODUCE AN OVERFALL OR RESTRICT FLOW OF THE WATER CONVEYANCE STRUCTURE.)

MAINTENANCE
- INSPECT WITHIN 24 HOURS OF A RAIN EVENT AND AT LEAST ONCE EVERY SEVEN CALENDAR DAYS.
- INSPECT FOR STONE DISPLACEMENT; REPLACE STONES ENSURING PLACEMENT AT FINISHED GRADE.
- CHECK FOR EROSION OR SCOURING AROUND SIDES OF THE APRON; REPAIR IMMEDIATELY.
- CHECK FOR PIPING OR UNDERCUTTING; REPAIR IMMEDIATELY.

RIPRAP OUTLET PROTECTION
NOT TO SCALE (REV. 12/17)

SEEDING SPECIFICATIONS
SEEDBED PREPARATION
- GRADE AND APPLY SOIL AMENDMENTS.

SEEDING FREQUENCY
- SEED ROUGH GRADED AREAS DAILY WHILE SOIL IS STILL LOOSE AND MOIST.

DENSITY OF VEGETATIVE COVER
- EIGHTY PERCENT OR GREATER OVER THE SOIL SURFACE.

MATERIALS
- SOIL AMENDMENTS – SELECT MATERIALS AND RATES AS DETERMINED BY A SOIL TEST (CONTACT YOUR COUNTY SOIL AND WATER CONSERVATION DISTRICT OR COOPERATIVE EXTENSION OFFICE FOR ASSISTANCE AND SOIL INFORMATION, INCLUDING AVAILABLE SOIL TESTING SERVICES) OR 400 TO 600 POUNDS OF 12–12–12 ANALYSIS FERTILIZER, OR EQUIVALENT. CONSIDER THE USE OF REDUCED PHOSPHOROUS APPLICATION WHERE SOIL TESTS INDICATE ADEQUATE PHOSPHOROUS LEVELS IN THE SOIL PROFILE.
- SEED – SELECT APPROPRIATE PLANT SPECIES SEED OR SEED MIXTURES ON THE BASIS OF QUICK GERMINATION, GROWTH, AND TIME OF YEAR TO BE SEEDED (SEE TABLE 1).
- MULCH – STRAW, HAY, WOOD FIBER, ETC. (TO PROTECT SEEDBED, RETAIN MOISTURE, AND ENCOURAGE PLANT GROWTH), ANCHORED TO PREVENT REMOVAL BY WIND OR WATER OR COVERED WITH MANUFACTURED EROSION CONTROL BLANKETS.

TABLE 1. SLOPE STEEPNESS RESTRICTIONS

SEED SPECIES*	RATE PER ACRE	PLANTING DEPTH	OPTIMUM DATES**
WHEAT OR RYE	150 LBS.	1 TO 1–1/2 INCHES	SEPT. 15–OCT. 30
SPRING OATS	100 LBS.	1 INCH	MARCH 1–APRIL 15
ANNUAL RYEGRASS	40 LBS.	1/4 INCH	MARCH 1–MAY 1 AUG. 1–SEPT. 1
GERMAN MILLET	40 LBS.	1 TO 2 INCHES	MAY 1–JUNE 1
SUDANGRASS	35 LBS.	1 TO 2 INCHES	MAY 1–JULY 30
BUCKWHEAT	60 LBS.	1 TO 2 INCHES	APRIL 15–JUNE 1
CORN (BROADCAST)	300 LBS.	1 TO 2 INCHES	MAY 11–AUG. 10
SORGHUM	35 LBS.	1 TO 2 INCHES	MAY 1–JULY 15

*PERENNIAL SPECIES MAY BE USED AS A TEMPORARY COVER, ESPECIALLY IF THE AREA TO BE SEEDED WILL REMAIN IDLE FOR MORE THAN ONE YEAR.
**SEEDING DONE OUTSIDE THE OPTIMUM SEEDING DATES INCREASES THE CHANCES OF SEEDING FAILURE. DATES MAY BE EXTENDED OR SHORTENED BASED ON THE LOCATION OF THE PROJECT WITHIN THE STATE.

NOTES:
MULCH ALONE IS AN ACCEPTABLE TEMPORARY COVER AND MAY BE USED IN LIEU OF TEMPORARY SEEDING, PROVIDED THAT IT IS APPROPRIATELY ANCHORED.

A HIGH POTENTIAL FOR FERTILIZER, SEED, AND MULCH TO WASH EXISTS ON STEEP BANKS, CUTS, AND IN CHANNELS AND AREAS OF CONCENTRATED FLOW.

SEEDING APPLICATION
SEEDBED PREPARATION
1. TEST SOIL TO DETERMINE pH AND NUTRIENT LEVELS.
2. APPLY SOIL AMENDMENTS AS RECOMMENDED BY THE SOIL TEST. IF TESTING IS NOT DONE, APPLY 400 TO 600 POUNDS PER ACRE OF 12–12–12 ANALYSIS FERTILIZER, OR EQUIVALENT.
3. WORK THE SOIL AMENDMENTS INTO THE UPPER TWO TO FOUR INCHES OF THE SOIL WITH A DISK OR RAKE OPERATED ACROSS THE SLOPE.

SEEDING
1. SELECT A SEED SPECIES OR AN APPROPRIATE SEED MIXTURE AND APPLICATION RATE FROM TABLE 1.
2. APPLY SEED UNIFORMLY WITH A DRILL OR CULTIPACKER SEEDER OR BY BROADCASTING. PLANT OR COVER SEED TO THE DEPTH SHOWN IN TABLE 1.

   NOTES:
   1. IF DRILLING OR BROADCASTING THE SEED, ENSURE GOOD SEED–TO–SOIL CONTACT BY FIRMING THE SEEDBED WITH A ROLLER OR CULTIPACKER AFTER COMPLETING SEED OPERATIONS.
   2. DAILY SEEDING WHEN THE SOIL IS MOIST IS USUALLY MOST EFFECTIVE.
   3. IF SEEDING IS DONE WITH A HYDROSEEDER, FERTILIZER AND MULCH CAN BE APPLIED WITH THE SEED IN A SLURRY MIXTURE.
3. APPLY MULCH AND ANCHOR IT IN PLACE.

SEEDING MAINTENANCE
- INSPECT WITHIN 24 HOURS OF EACH RAIN EVENT AND AT LEAST ONCE EVERY SEVEN CALENDAR DAYS.
- CHECK FOR EROSION OR MOVEMENT OF MULCH AND REPAIR IMMEDIATELY.
- MONITOR FOR EROSION DAMAGE AND ADEQUATE COVER (80 PERCENT DENSITY); RESEED, FERTILIZE, AND APPLY MULCH WHERE NECESSARY.
- IF NITROGEN DEFICIENCY IS APPARENT, TOP–DRESS FALL SEEDED WHEAT OR RYE SEEDING WITH 50 POUNDS PER ACRE OF NITROGEN IN FEBRUARY OR MARCH.

MULCH SPECIFICATIONS
MATERIALS

TABLE 1. SLOPE STEEPNESS RESTRICTIONS

MATERIAL*	RATE PER ACRE	COMMENTS
STRAW OR HAY	2 TONS	SHOULD BE DRY, FREE OF UNDESIRABLE SEEDS. SPREAD BY HAND OR MACHINE. MUST BE CRIMPED OR ANCHORED (SEE TABLE 2).
WOOD FIBER OR CELLULOSE	1 TON	APPLY WITH A HYDRAULIC MULCH MACHINE AND USE WITH TACKING AGENT.

*MULCHING IS NOT RECOMMENDED IN CONCENTRATED FLOWS. CONSIDER EROSION CONTROL BLANKETS OR OTHER STABILIZATION METHODS.

COVERAGE
- THE MULCH SHOULD HAVE A UNIFORM DENSITY OF AT LEAST 75 PERCENT OVER THE SOIL SURFACE.

ANCHORING
TABLE 2. MULCH ANCHORING METHODS

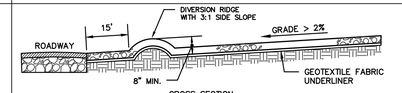
ANCHORING METHOD*	HOW TO APPLY
MULCH ANCHORING TOOL OR FARM DISK (DULL, SERRATED, AND BLADES SET STRAIGHT)	CRIMP OR PUNCH THE STRAW OR HAY TWO TO FOUR INCHES INTO THE SOIL. OPERATE MACHINERY ON THE CONTOUR OF THE SLOPE.
CLEATING WITH DOZER TRACKS	OPERATE DOZER UP AND DOWN SLOPE TO PREVENT FORMATION OF RILLS BY DOZER CLEATS.
WOOD HYDROMULCH FIBERS	APPLY ACCORDING TO MANUFACTURER'S RECOMMENDATIONS.
SYNTHETIC TACKIFIERS, BINDERS, OR SOIL STABILIZERS	APPLY ACCORDING TO MANUFACTURER'S RECOMMENDATIONS.
NETTING (SYNTHETIC OR BIODEGRADABLE MATERIAL)	INSTALL NETTING IMMEDIATELY AFTER APPLYING MULCH. ANCHOR NETTING WITH STAPLES. EDGES OF NETTING STRIPS SHOULD OVERLAP WITH EACH UP–SLOPE STRIP OVERLAPPING FOUR TO SIX INCHES OVER THE ADJACENT DOWN–SLOPE STRIP. BEST SUITED TO SLOPE APPLICATIONS. IN MOST INSTANCES, INSTALLATION DETAILS ARE SITE SPECIFIC, SO MANUFACTURER'S RECOMMENDATIONS SHOULD BE FOLLOWED.

*ALL FORMS OF MULCH MUST BE ANCHORED TO PREVENT DISPLACEMENT BY WIND AND/OR WATER.

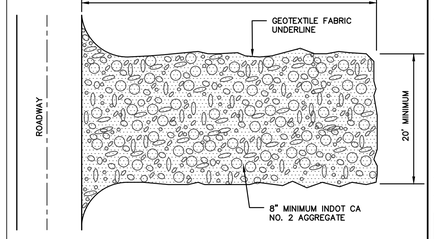
MULCH APPLICATION
1. APPLY MULCH AT THE RECOMMENDED RATE SHOWN IN TABLE 1.
2. SPREAD THE MULCH MATERIAL UNIFORMLY BY HAND, HAYFORK, MULCH BLOWER, OR HYDRAULIC MULCH MACHINE. AFTER SPREADING, NO MORE THAN 25 PERCENT OF THE GROUND SHOULD BE VISIBLE.
3. ANCHOR STRAW OR HAY MULCH IMMEDIATELY AFTER APPLICATION. THE MULCH CAN BE ANCHORED USING ONE OF THE METHODS LISTED BELOW:
   a. CRIMP WITH A MULCH ANCHORING TOOL, A WEIGHTED FARM DISK WITH DULL SERRATED BLADES SET STRAIGHT, OR TRACK CLEATS OF A BULLDOZER,
   b. APPLY HYDRAULIC MULCH WITH SHORT CELLULOSE FIBERS,
   c. APPLY A LIQUID TACKIFIER, OR
   d. COVER WITH NETTING SECURED BY STAPLES.

MULCH MAINTENANCE
- INSPECT WITHIN 24 HOURS OF EACH RAIN EVENT AND AT LEAST ONCE EVERY SEVEN CALENDAR DAYS.
- CHECK FOR EROSION OR MOVEMENT OF MULCH; REPAIR DAMAGED AREAS, RESEED, APPLY NEW MULCH AND ANCHOR THE MULCH IN PLACE.
- CONTINUE INSPECTIONS UNTIL VEGETATION IS FIRMLY ESTABLISHED.
- IF EROSION IS SEVER OR RECURRING, USE EROSION CONTROL BLANKETS OR OTHER MORE SUBSTANTIAL STABILIZATION METHODS TO PROTECT THE AREA.

TEMPORARY SEEDING WITH MULCH
NOT TO SCALE (REV. 01/17)



CROSS SECTION



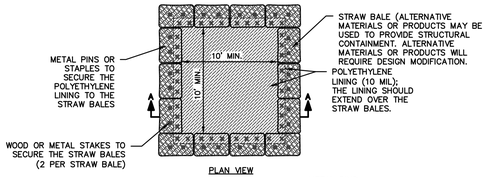
SPECIFICATIONS
LOCATION
- AVOID LOCATING ON STEEP SLOPES OR AT CURVES IN PUBLIC ROADS.

DIMENSIONS
- WIDTH: TWENTY (20) FEET MINIMUM OR FULL WIDTH OF ENTRANCE/EXIT ROADWAY, WHICHEVER IS GREATER.
- LENGTH: ONE–HUNDRED FIFTY (150) FEET MINIMUM (LENGTH CAN BE SHORTER FOR SMALLER SITES).
- THICKNESS: EIGHT (8) INCHES MINIMUM.

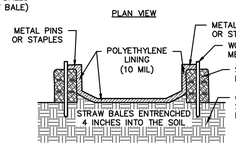
MATERIALS
- ONE (1) TO TWO AND ONE–HALF (2–1/2) INCH DIAMETER WASHED AGGREGATE (INDOT CA NO. 2).
- ONE–HALF (1/2) TO ONE AND ONE–HALF (1–1/2) INCH WASHED AGGREGATE (INDOT CA NO. 53); OPTIONAL, USED PRIMARILY WHERE THE PURPOSE OF THE PAD IS TO KEEP SOIL FROM ADHERING TO VEHICLE TIRES.
- GEOTEXTILE FABRIC UNDERLAYMENT (USED AS A SEPARATE LAYER TO PREVENT INTERMIXING OF AGGREGATE AND THE UNDERLYING SOIL MATERIAL AND TO PROVIDE GREATER BEARING STRENGTH WHEN ENCOUNTERING WET CONDITIONS OR SOILS WITH SEASONAL HIGH WATER TABLE LIMITATIONS).

INSTALLATION
1. REMOVE ALL VEGETATION AND OTHER OBJECTIONABLE MATERIAL FROM THE FOUNDATION AREA.
2. GRADE FOUNDATION AND CROWN FOR POSITIVE DRAINAGE. IF THE SLOPE OF THE CONSTRUCTION ENTRANCE IS TOWARD A PUBLIC ROAD AND EXCEEDS TWO (2) PERCENT, CONSTRUCT AN EIGHT (8) INCH HIGH DIVERSION RIDGE WITH A RATIO OF 3–TO–1 SIDE SLOPES ACROSS THE FOUNDATION AREA ABOUT 15 FEET FROM THE ENTRANCE TO DIVERT RUNOFF AWAY FROM THE ROAD (SEE CROSS–SECTION VIEW ABOVE.).
3. INSTALL A CULVERT PIPE UNDER THE PAD IF NEEDED TO MAINTAIN PROPER PUBLIC ROAD DRAINAGE.
4. IF WET CONDITIONS ARE ANTICIPATED, PLACE GEOTEXTILE FABRIC ON THE GRADED FOUNDATION TO IMPROVE STABILITY.
5. PLACE AGGREGATE (INDOT CA NO. 2) TO THE DIMENSIONS AND GRADE SHOWN IN THE CONSTRUCTION PLANS, LEAVING THE SURFACE SMOOTH AND SLOPED FOR DRAINAGE.
6. WHERE POSSIBLE, DIVERT ALL STORM WATER RUNOFF AND DRAINAGE FROM THE TEMPORARY CONSTRUCTION INGRESS/EGRESS PAD TO A SEDIMENT TRAP OR BASIN.

MAINTENANCE
- INSPECT DAILY.
- RESHAPE PAD AS NEEDED FOR DRAINAGE AND RUNOFF CONTROL.
- TOP–DRESS WITH CLEAN AGGREGATE AS NEEDED.
- IMMEDIATELY REMOVE MUD AND SEDIMENT TRACKED OR WASHED ONTO PUBLIC ROADS.
- FLUSHING SHOULD ONLY BE USED IF THE WATER FROM THE CONSTRUCTION DRIVE CAN BE CONVEYED INTO A SEDIMENT TRAP OR BASI

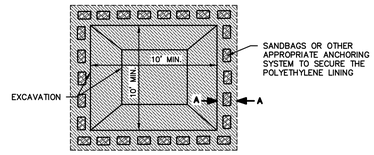


PLAN VIEW

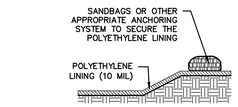


SECTION A–A

ABOVE GRADE SYSTEM



PLAN VIEW



SECTION A–A

BELOW GRADE SYSTEM

MATERIALS
- MINIMUM OF TEN MIL POLYETHYLENE SHEETING THAT IS FREE OF HOLES, TEARS, AND OTHER DEFECTS. THE SHEETING SELECTED SHOULD BE OF AN APPROPRIATE SIZE TO FIT THE WASHOUT SYSTEM WITHOUT SEAMS OR OVERLAP OF THE LINING (DESIGNED AND INSTALLED SYSTEMS).
- SIGNAGE.
- ORANGE SAFETY FENCING OR EQUIVALENT.
- STRAW BALES, SANDBAGS (BAGS SHOULD BE ULTRAVIOLET–STABILIZED GEOTEXTILE FABRIC), SOIL MATERIAL, OR OTHER APPROPRIATE MATERIALS THAT CAN BE USED TO CONSTRUCT A CONTAINMENT SYSTEM (ABOVE GRADE SYSTEMS).
- METAL PINS OR STAPLES AT A MINIMUM OF SIX INCHES IN LENGTH, SANDBAGS, OR ALTERNATIVE FASTENER TO SECURE POLYETHYLENE LINING TO THE CONTAINMENT SYSTEM.
- NON–COLLAPSING AND NON–WATER HOLDING COVER FOR USE DURING RAIN EVENTS (OPTIONAL).

INSTALLATION

PREFABRICATED WASHOUT SYSTEMS/CONTAINERS
- INSTALL AND LOCATE ACCORDING TO THE MANUFACTURER'S RECOMMENDATIONS.

DESIGNED AND INSTALLED SYSTEMS
- UTILIZE AND FOLLOW THE DESIGN IN THE STORM WATER POLLUTION PREVENTION PLAN TO INSTALL THE SYSTEM.
- DEPENDENT UPON THE TYPE OF SYSTEM, EITHER EXCAVATE THE PIT OR INSTALL THE CONTAINMENT SYSTEM.
- A BASE SHALL BE CONSTRUCTED AND PREPARED THAT IS FREE OF ROCKS AND OTHER DEBRIS THAT MAY CAUSE TEARS OR PUNCTURES IN THE POLYETHYLENE LINING.
- INSTALL THE POLYETHYLENE LINING. FOR EXCAVATED SYSTEMS, THE LINING SHOULD EXTEND OVER THE ENTIRE EXCAVATION. THE LINING FOR BERMED SYSTEMS SHOULD BE INSTALLED OVER THE POOLING AREA WITH ENOUGH MATERIAL TO EXTEND THE LINING OVER THE BERM OR CONTAINMENT SYSTEM. THE LINING SHOULD BE SECURED WITH PINS, STAPLES, OR OTHER FASTENERS.
- PLACE FLAGS, SAFETY FENCING, OR EQUIVALENT TO PROVIDE A BARRIER TO CONSTRUCTION EQUIPMENT AND OTHER TRAFFIC.
- PLACE A NON–COLLAPSING, NON–WATER HOLDING COVER OVER THE WASHOUT FACILITY PRIOR TO A PREDICTED RAINFALL EVENT TO PREVENT ACCUMULATION OF WATER AND POSSIBLE OVERFLOW OF THE SYSTEM (OPTIONAL).
- INSTALL SIGNAGE THAT IDENTIFIES CONCRETE WASHOUT AREAS.
- POST SIGNS DIRECTING CONTRACTORS AND SUPPLIERS TO DESIGNATED LOCATIONS.
- WHERE NECESSARY, PROVIDE STABLE INGRESS AND EGRESS OR ALTERNATIVE APPROACH PAD FOR CONCRETE WASHOUT SYSTEMS.

MAINTENANCE
- INSPECT DAILY AND AFTER EACH STORM EVENT.
- INSPECT THE INTEGRITY OF THE OVERALL STRUCTURE INCLUDING, WHERE APPLICABLE, THE CONTAINMENT SYSTEM.
- INSPECT THE SYSTEM FOR LEAKS, SPILLS, AND TRACKING OF SOIL BY EQUIPMENT.
- INSPECT THE POLYETHYLENE LINING FOR FAILURE, INCLUDING TEARS AND PUNCTURES.
- ONCE CONCRETE WASTES HARDEN, REMOVE AND DISPOSE OF THE MATERIAL.
- EXCESS CONCRETE SHOULD BE REMOVED WHEN THE WASHOUT SYSTEM REACHES 50 PERCENT OF THE DESIGN CAPACITY. USE OF THE SYSTEM SHOULD BE DISCONTINUED UNTIL APPROPRIATE MEASURES CAN BE INITIATED TO CLEAN THE STRUCTURE. PREFABRICATED SYSTEMS SHOULD ALSO UTILIZE THIS CRITERION, UNLESS THE MANUFACTURER HAS ALTERNATE SPECIFICATIONS.
- UPON REMOVAL OF THE SOLIDS, INSPECT THE STRUCTURE. REPAIR THE STRUCTURE AS NEEDED OR CONSTRUCT A NEW SYSTEM.
- DISPOSE OF ALL CONCRETE IN A LEGAL MANNER. REUSE THE MATERIAL ON SITE, RECYCLE OR HAUL THE MATERIAL TO AN APPROVED CONSTRUCTION/DEMOLITION LANDFILL SITE. RECYCLING OF MATERIAL IS ENCOURAGED. THE WASTE MATERIAL CAN BE USED FOR MULTIPLE APPLICATIONS INCLUDING BUT NOT LIMITED TO ROADBEDS AND BUILDING. THE AVAILABILITY FOR RECYCLING SHOULD BE CHECKED LOCALLY.
- THE PLASTIC LINER SHOULD BE REPLACED AFTER EVERY CLEANING. THE REMOVAL OF MATERIAL WILL USUALLY DAMAGE THE LINING.
- THE CONCRETE WASHOUT SYSTEM SHOULD BE REPAIRED OR ENLARGED AS NECESSARY TO MAINTAIN CAPACITY FOR CONCRETE WASTE.
- CONCRETE WASHOUT SYSTEMS ARE DESIGNED TO PROMOTE EVAPORATION. HOWEVER, IF THE LIQUIDS DO NO EVAPORATE AND THE SYSTEM IS NEAR CAPACITY IT MAY BE NECESSARY TO VACUUM OR REMOVE THE LIQUIDS AND DISPOSE OF THEM IN AN ACCEPTABLE METHOD. DISPOSAL MAY BE ALLOWED AT THE LOCAL SANITARY SEWER AUTHORITY PROVIDED THEIR NATIONAL POLLUTANT DISCHARGE ELIMINATION SYSTEM PERMITS ALLOW FOR ACCEPTANCE OF THIS MATERIAL. ANOTHER OPTION WOULD BE TO UTILIZE A SECONDARY CONTAINMENT SYSTEM OR BASIN FOR FUTURE DEWATERING.
- PREFABRICATED UNITS ARE OFTEN PUMPED AND THE COMPANY SUPPLYING THE UNIT PROVIDES THIS SERVICE.
- INSPECT CONSTRUCTION ACTIVITIES ON A REGULAR BASIS TO ENSURE SUPPLIERS, CONTRACTORS, AND OTHERS ARE UTILIZING DESIGNATED WASHOUT AREAS. IF CONCRETE WASTE IS BEING DISPOSED OF IMPROPERLY, IDENTIFY THE VIOLATORS AND TAKE APPROPRIATE ACTION.
- WHEN CONCRETE WASHOUT SYSTEMS ARE NO LONGER REQUIRED, THE CONCRETE WASHOUT SYSTEMS SHALL BE CLOSED. DISPOSE OF ALL HARDENED CONCRETE AND OTHER MATERIALS USED TO CONSTRUCT THE SYSTEM. HOLES, DEPRESSIONS AND OTHER LAND DISTURBANCES ASSOCIATED WITH THE SYSTEM SHOULD BE BACKFILLED, GRADED, AND STABILIZED.

SPECIFICATIONS

SITE MANAGEMENT
- COMPLETE CONSTRUCTION/INSTALLATION OF THE SYSTEM AND HAVE WASHOUT LOCATIONS OPERATIONAL PRIOR TO CONCRETE DELIVERY.
- DO NOT WASH OUT CONCRETE TRUCKS OR EQUIPMENT INTO STORM DRAINS, WETLANDS, STREAMS, RIVERS, CREEKS, DITCHES, OR STREETS.
- NEVER WASH OUT INTO A STORM SEWER DRAINAGE SYSTEM. THESE SYSTEMS ARE TYPICALLY CONNECTED TO A NATURAL CONVEYANCE SYSTEM.
- WHERE NECESSARY, PROVIDE STABLE INGRESS AND EGRESS.
- IT IS RECOMMENDED THAT WASHOUT SYSTEMS BE RESTRICTED TO WASHING CONCRETE FROM MIXER AND PUMP TRUCKS AND NOT USED TO DISPOSE OF EXCESS CONCRETE OR RESIDUAL LOADS DUE TO THE POTENTIAL TO EXCEED THE DESIGN CAPACITY OF THE WASHOUT SYSTEM. SMALL AMOUNTS OF EXCESS OR RESIDUAL CONCRETE (NOT WASHOUT WATER) MAY BE DISPOSED OF IN AREAS THAT WILL NOT RESULT IN FLOW TO AN AREA THAT IS TO BE PROTECTED.
- INSTALL SYSTEMS AT STRATEGIC LOCATIONS THAT ARE CONVENIENT AND IN CLOSE PROXIMITY TO WORK AREAS AND IN SUFFICIENT NUMBER TO ACCOMMODATE THE DEMAND FOR DISPOSAL.
- INSTALL SIGNAGE IDENTIFYING THE LOCATION OF CONCRETE WASHOUT SYSTEMS.

LOCATION
- LOCATE CONCRETE WASHOUT SYSTEMS AT LEAST 50 FEET FROM ANY CREEKS, WETLANDS, DITCHEST, KARST FEATURES, OR STORM DRAINS/MANMADE CONVEYANCE SYSTEMS.
- TO THE EXTENT PRACTICAL, LOCATE CONCRETE WASHOUT SYSTEMS IN RELATIVELY FLAT AREAS THAT HAVE ESTABLISHED VEGETATIVE COVER AND DO NOT RECEIVE RUNOFF FROM ADJACENT LAND AREAS.
- LOCATE IN AREAS THAT PROVIDE EASY ACCESS FOR CONCRETE TRUCKS AND OTHER CONSTRUCTION EQUIPMENT.
- LOCATE AWAY FROM OTHER CONSTRUCTION TRAFFIC TO REDUCE THE POTENTIAL FOR DAMAGE TO THE SYSTEM.

GENERAL DESIGN CONSIDERATIONS
- THE STRUCTURE OR SYSTEM SHALL BE DESIGNED TO CONTAIN THE ANTICIPATED WASHOUT WATER ASSOCIATED WITH CONSTRUCTION ACTIVITIES.
- THE SYSTEM SHALL BE DESIGNED, TO THE EXTENT PRACTICAL, TO ELIMINATE RUNOFF FROM ENTERING THE WASHOUT SYSTEM.
- RUNOFF FROM A RAINSTORM OR SNOWMELT SHOULD NOT CARRY WASTES AWAY FROM THE WASHOUT LOCATION.
- WASHOUT WILL NOT IMPACT FUTURE LAND USES (I.E., OPEN SPACES, LANDSCAPED AREAS, HOME SITES, PARKS),
- WASHOUT SYSTEMS/CONTAINMENTS MEASURES MAY ALSO BE UTILIZED ON SMALLER INDIVIDUAL BUILDING SITES. THE DESIGN AND SIZE OF THE SYSTEM CAN BE ADJUSTED TO ACCOMMODATE THE EXPECTED CAPACITY.

PREFABRICATED WASHOUT SYSTEMS/CONTAINERS
- SELF–CONTAINED STURDY CONTAINMENT SYSTEMS THAT ARE DELIVERED TO A SITE AND LOCATED AT STRATEGIC LOCATIONS FOR CONCRETE DISPOSAL.
- THESE SYSTEMS ARE MANUFACTURED TO RESIST DAMAGE FROM CONSTRUCTION EQUIPMENT AND PROTECT AGAINST LEAKS OR SPILLS.
- MANUFACTURER OR SUPPLIER PROVIDES THE CONTAINERS. THE PROJECT SITE MANAGER MAINTAINS THE SYSTEM OR THE SUPPLIER PROVIDES COMPLETE SERVICE THAT INCLUDES MAINTENANCE AND DISPOSAL.
- UNITS ARE OFTEN AVAILABLE WITH OR WITHOUT RAMPS. UNITS WITH RAMPS LEND THEMSELVES TO ACCOMMODATE PUMP TRUCKS.
- MAINTAIN ACCORDING TO MANUFACTURER'S RECOMMENDATIONS.

DESIGNED AND INSTALLED UNITS

THESE UNITS ARE DESIGNED AND INSTALLED ON SITE. THEY TEND TO BE LESS RELIABLE THAN PREFABRICATED SYSTEMS ARE OFTEN PRONE TO FAILURE. CONCRETE WASHOUT SYSTEMS CAN BE CONSTRUCTED ABOVE OR BELOW GRADE. IT IS NOT UNCOMMON TO HAVE A SYSTEM THAT IS PARTLY BELOW GRADE WITH AN ADDITIONAL CONTAINMENT STRUCTURE ABOVE GRADE.
- WASHOUT SYSTEMS SHALL UTILIZE A PIT OR BERMED AREA DESIGNED AND MAINTAINED AT A CAPACITY TO CONTAIN ALL LIQUID AND CONCRETE WASTE GENERATED BY WASHOUT OPERATIONS.
- THE VOLUME OF THE SYSTEM MUST ALSO BE DESIGNED TO CONTAIN RUNOFF THAT DRAINS TO THE SYSTEM AND RAINFALL THAT ENTERS THE SYSTEM FOR A TWO–YEAR FREQUENCY, 24–HOUR STORM EVENT.

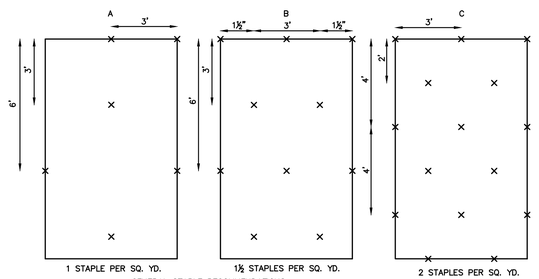
BELOW GRADE SYSTEM
- A WASHOUT SYSTEM INSTALLED BELOW GRADE SHOULD BE A MINIMUM OF TEN FEET WIDE BY TEN FEET LONG, BUT SIZED TO CONTAIN ALL LIQUID AND WASTE THAT IS EXPECTED TO BE GENERATED BETWEEN SCHEDULED CLEANOUT PERIODS. THE SIZE OF THE PIT MAY BE LIMITED BY THE SIZE OF THE POLYETHYLENE AVAILABLE.
- THE POLYETHYLENE LINING SHOULD BE ADEQUATE SIZE TO EXTEND OVER THE ENTIRE EXCAVATION.
- INCLUDE A MINIMUM 12–INCH FREEBOARD TO REASONABLY ENSURE THAT THE STRUCTURE WILL NOT OVERTOP DURING A RAIN EVENT.
- LINE THE PIT WITH TEN MIL POLYETHYLENE LINING TO CONTROL SEEPAGE.
- THE BOTTOM OF EXCAVATED PIT SHOULD BE ABOVE THE SEASONAL HIGH WATER TABLE.

ABOVE GRADE SYSTEM
- A SYSTEM DESIGNED AND BUILT ABOVE GRADE SHOULD BE A MINIMUM OF TEN FEET WIDE BY TEN FEET LONG, BUT SIZED TO CONTAIN ALL LIQUID AND WASTE THAT IS EXPECTED TO BE GENERATED BETWEEN SCHEDULED CLEANOUT PERIODS. THE SIZE OF THE CONTAINMENT SYSTEM MAY BE LIMITED BY THE SIZE OF POLYETHYLENE AVAILABLE. THE POLYETHYLENE LINING SHOULD BE OF ADEQUATE SIZE TO EXTEND OVER THE BERM OR CONTAINMENT SYSTEM.
- THE SYSTEM DESIGN MAY UTILIZE AN EARTHEN BERM, STRAW BALES, SANDBAGS, OR OTHER ACCEPTABLE BARRIERS THAT WILL MAINTAIN ITS SHAPE AND INTEGRITY AND SUPPORT THE POLYETHYLENE LINING.
- INCLUDE A MINIMUM FOUR–INCH FREEBOARD AS PART OF THE DESIGN.

WASHOUT PROCEDURES
- DO NOT LEAVE EXCESS MUD IN THE CHUTES OR HOPPER AFTER THE POUR. EVERY EFFORT SHOULD BE MADE TO EMPTY THE CHUTES AND HOPPER AT THE POUR. THE LESS MATERIAL LEFT IN THE CHUTES AND HOPPER, THE QUICKER AND EASIER THE CLEANOUT. SMALL AMOUNTS OF EXCESS CONCRETE (NOT WASHOUT WATER) MAY BE DISPOSED OF IN AREAS THAT WILL NOT RESULT IN FLOW TO AN AREA THAT IS TO BE PROTECTED.
- AT THE WASHOUT LOCATION, SCRAPE AS MUCH MATERIAL FROM THE CHUTES AS POSSIBLE BEFORE WASHING THEM. USE NON–WATER CLEANING METHODS TO MINIMIZE THE CHANCE FOR WASTE TO FLOW OFF SITE.
- REMOVE AS MUCH MUD AS POSSIBLE WHEN WASHING OUT.
- STOP WASHING OUT IN AN AREA IF YOU OBSERVE WATER RUNNING OFF THE DESIGNATED AREA OR IF THE CONTAINMENT SYSTEM IS LEAKING OR OVERFLOWING AND INEFFECTIVE.
- DO NOT BACK FLUSH EQUIPMENT AT THE PROJECT SITE. BACK FLUSHING SHOULD BE RESTRICTED TO THE PLANT AS IT GENERATES LARGE VOLUMES OF WASTE THAT MORE THAN LIKELY WILL EXCEED THE CAPACITY OF MOST WASHOUT SYSTEMS. IF AN EMERGENCY ARISES, BACK FLUSH SHOULD ONLY BE PERFORMED WITH THE PERMISSION OF AN ON–SITE MANAGER FOR THE PROJECT.
- DO NOT USE ADDITIVES WITH WASH WATER. DO NOT USE SOLVENTS OR ACIDS THAT MAY BE USED AT THE TARGET PLANT.

CONCRETE WASH OUT

NOT TO SCALE (REV. 01/17)



SPECIFICATIONS

EFFECTIVE LIFE
- THE FUNCTIONAL LIFE OF AN EROSION CONTROL BLANKET IS DEPENDENT ON THE MATERIALS USED.

ANCHORING
- STAPLES, PINS OR STAKES USED TO PREVENT MOVEMENT OR DISPLACEMENT OF BLANKET. (FOLLOW MANUFACTURER'S RECOMMENDATIONS FOR SPECIFIC APPLICATIONS.)

MATERIALS
- ORGANIC (STRAW, EXCELSIOR, WOVEN PAPER, COCONUT FIBER, ETC.) OR SYNTHETIC MULCH INCORPORATED WITH A POLYPROPYLENE, NATURAL FIBER OR SIMILAR NETTING MATERIAL. (THE NETTING MAY BE BIODEGRADABLE, PHOTODEGRADABLE OR PERMANENT.)

NOTE: SOME EROSION CONTROL BLANKET NETTINGS MAY POSE A THREAT TO CERTAIN SPECIES OF WILDLIFE IF THEY BECOME ENTANGLED IN THE NETTING MATRIX.
- SIX TO 12–INCH STAPLES, PINS, OR STAKES.

INSTALLATION
1. SELECT THE TYPE AND WEIGHT OF EROSION CONTROL BLANKET TO FIT THE SITE CONDITIONS (E.G., SLOPE, CHANNEL, FLOW VELOCITY) PER THE MANUFACTURER'S RECOMMENDATIONS.
2. PREPARE THE SEEDBED, ADD SOIL AMENDMENTS, AND PERMANENTLY SEED THE AREA IMMEDIATELY FOLLOWING SEEDBED PREPARATION.
3. LAY EROSION CONTROL BLANKETS ON THE SEEDED AREA SO THAT THEY ARE IN CONTINUOUS CONTACT WITH THE SOIL WITH EACH UP–SLOPE OR UP–STREAM BLANKET OVERLAPPING THE DOWN–SLOPE OR DOWN–STREAM BLANKET BY AT LEAST EIGHT INCHES, OR FOLLOW MANUFACTURER'S RECOMMENDATIONS.
4. TUCK THE UPPERMOST EDGE OF THE UPPER BLANKETS INTO A CHECK SLOT (SLIT TRENCH), BACKFILL WITH SOIL AND TAMP DOWN. IN CERTAIN APPLICATIONS, THE MANUFACTURER MAY REQUIRE ADDITIONAL CHECK SLOTS AT SPECIFIC LOCATIONS DOWN SLOPE FROM THE UPPERMOST EDGE OF THE UPPER BLANKETS.
5. ANCHOR THE BLANKETS IN PLACE BY DRIVING STAPLES, PINS, OR STAKES THROUGH THE BLANKET AND INTO THE UNDERLYING SOIL. FOLLOW AN ANCHORING PATTERN APPROPRIATE FOR THE SITE CONDITIONS AND AS RECOMMENDED BY THE MANUFACTURER.

MAINTENANCE
- INSPECT WITHIN 24 HOURS OF EACH RAIN EVENT AND AT LEAST ONCE EVERY SEVEN CALENDAR DAYS.
- CHECK FOR EROSION OR DISPLACEMENT OF THE BLANKET.
- IF ANY AREA SHOWS EROSION, PULL BACK THAT PORTION OF THE BLANKET COVERING THE ERODED AREA, ADD SOIL AND TAMP, RESEED THE AREA, REPLACE AND STAPLE THE BLANKET.

NOTES

CHANNEL LININGS UTILIZE STAPLE PATTERN "C" WITH ADDITIONAL STAPLES ON SIDE SLOPES AT PROJECTED WATER LINE.

STAPLE PATTERNS APPLY TO ALL NORTH AMERICAN GREEN EROSION CONTROL BLANKETS. STAPLE PATTERNS MAY VARY DEPENDING UPON SOIL TYPE AND AVERAGE RAINFALL.

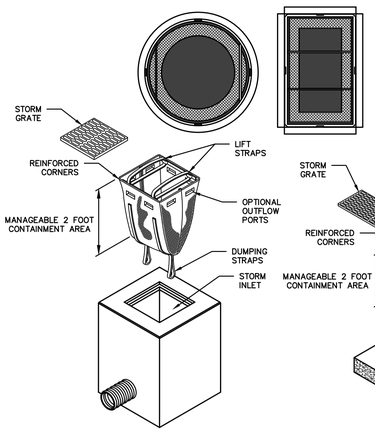
AT SLOPE LENGTHS GREATER THAN 300 FEET OR WHERE DRAINAGE OVER LARGE AREAS IS DIRECTED ONTO THE BLANKETS, STAPLE PATTERN "C" SHOULD BE UTILIZED.

EROSION CONTROL BLANKET

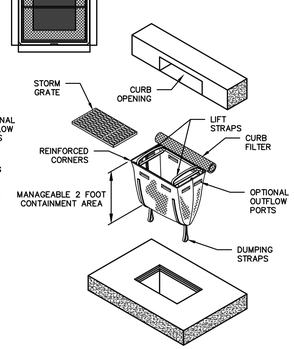
NOT TO SCALE (REV. 01/17)

INSTALLATION
1. REMOVE THE STORM SEWER GRATE AND PLACE THE FRAME INTO THE GRATE OPENING.
2. PLACE GEOTEXTILE FABRIC INTO THE FRAME AND SECURE ACCORDING TO THE MANUFACTURER'S RECOMMENDATIONS.
3. REPLACE THE STORM SEWER GRATE.

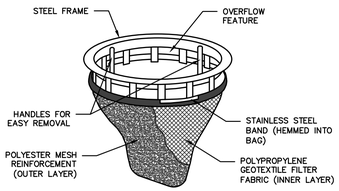
MAINTENANCE
- INSPECT DAILY.
- REMOVE ACCUMULATED SEDIMENT AND DEBRIS AFTER EACH STORM EVENT. DEPOSIT SEDIMENT IN AN AREA WHERE IT WILL NOT RE–ENTER THE PAVED AREA OR STORM DRAINS.
- REPLACE OR CLEAN GEOTEXTILE FABRIC AS NEEDED.
- WHEN THE CONTRIBUTING DRAINAGE AREA HAS BEEN STABILIZED, REMOVE INLET PROTECTION.

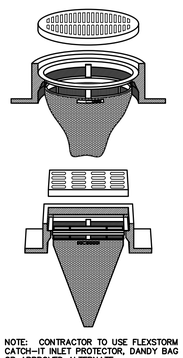


DETAIL OF INLET SEDIMENT CONTROL DEVICE



DETAIL OF INLET SEDIMENT CONTROL DEVICE WITH CURB FILTER





NOTE: CONTRACTOR TO USE FLEXSTORM CATCH–IT INLET PROTECTOR, DANDY BAG OR APPROVED ALTERNATE.

DROP–IN INLET PROTECTION TO BE USED IN PAVED AREAS.

DROP–IN INLET PROTECTION

NOT TO SCALE (REV. 01/17)

SPECIFICATIONS

NOTE: ALTERNATIVE SUPPORT SYSTEMS MAY BE SUBSTITUTED FOR HARDWOOD POSTS AND CROSS BRACES.

CONTRIBUTING DRAINAGE AREA
- ONE ACRE MAXIMUM.

EFFECTIVE LIFE
- SIX MONTHS (MAXIMUM).

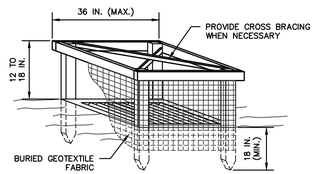
CAPACITY
- RUNOFF FROM A TWO–YEAR FREQUENCY, 24–HOUR STORM EVENT ENTERING A STORM DRAIN WITHOUT BYPASS FLOW.

GEOTEXTILE STRUCTURE
- HEIGHT – 12 TO 18 INCHES, MEASURED FROM THE TOP OF STORM DRAIN INLET.
- POST SPACING – 36–INCH MAXIMUM SPACING BETWEEN POSTS.
- FRAME SUPPORT – BRACING TO STRENGTHEN INTEGRITY OF THE STRUCTURE. (STRUCTURE MUST WITHSTAND 1½–FOOT HEAD OF WATER AND SEDIMENT WITHOUT COLLAPSING OR WITHSTANDING.)

MATERIALS
- SUPPORT POSTS
  - 2 x 2 INCH OR 2 x4 INCH HARDWOOD POSTS.
  - THREE FEET LENGTH, MINIMUM.
- 1 x 2 INCH OR 1 x 3 INCH HARDWOOD CROSS BRACING LUMBER.
- LATHE.
- STAPLES OR NAILS.
- GEOTEXTILE FABRIC.

TABLE 2. GEOTEXTILE FABRIC SPECIFICATIONS FOR SILT FENCE (MINIMUM)

PHYSICAL PROPERTY	WOVEN GEOTEXTILE FABRIC	NON–WOVEN GEOTEXTILE FABRIC
FILTERING EFFICIENCY	85%	85%
UV RESISTANCE (INHIBITORS AND STABILIZERS TO ENSURE SIX MONTH MINIMUM LIFE AT TEMPERATURES 0° TO 120° F)	70%	85%
TEXTILE STRENGTH AT 20% ELONGATION STANDARD STRENGTH EXTRA STRENGTH	30 LBS. PER LINEAL INCH 50 LBS. PER LINEAL INCH	50 LBS. PER LINEAL INCH 70 LBS. PER LINEAL INCH
SLURRY FLOW RATE	0.3 GAL./MIN./SQUARE FOOT	4.5 GAL./MIN./SQUARE FOOT
WATER FLOW RATE	15 GAL./MIN./SQUARE FOOT	220 GAL./MIN./SQUARE FOOT

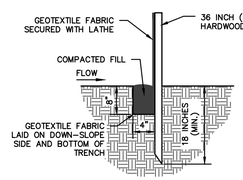


INSTALLATION
1. DIG AN EIGHT–INCH DEEP, FOUR–INCH WIDE TRENCH AROUND THE PERIMETER OF THE INLET.
2. IF USING PRE–ASSEMBLED GEOTEXTILE FABRIC AND POSTS, DRIVE THE POSTS INTO THE SOIL, TIGHTLY STRETCHING THE GEOTEXTILE FABRIC BETWEEN POSTS AS EACH IS DRIVEN. (POSTS MUST BE PLACED ON THE INLET SIDE OF THE ANCHOR TRENCH WITH THE GEOTEXTILE FABRIC ON THE SIDE OF THE TRENCH FARTHEST FROM THE INLET.)

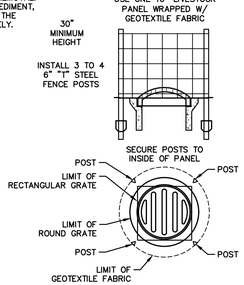
   NOTE: IF ASSEMBLING THE GEOTEXTILE FABRIC AND POSTS ON–SITE, DRIVE THE POSTS INTO THE SOIL AND THEN SECURE THE GEOTEXTILE FABRIC TO THE POSTS BY PLACING A PIECE OF LATHE OVER THE FABRIC AND FASTENING IT TO THE POST (STRETCHING THE FABRIC BETWEEN POSTS AS IT IS FASTENED).
3. USE THE WRAP JOIN METHOD WHEN JOINING POSTS.
4. PLACE THE BOTTOM 12 INCHES OF GEOTEXTILE FABRIC INTO THE EIGHT–INCH DEEP TRENCH, LAYING THE REMAINING FOUR INCHES IN THE BOTTOM OF THE TRENCH AND EXTENDING AWAY FROM THE INLET.
5. BACKFILL THE TRENCH WITH SOIL MATERIAL AND COMPACT IT IN PLACE.
6. BRACE THE POSTS BY NAILING BRACES INTO EACH CORNER POST OR UTILIZE RIGID PANELS TO SUPPORT FABRIC.

   NOTE: IN SITUATIONS WHERE STORM WATER MAY BYPASS THE STRUCTURE, EITHER:
   - SET THE TOP OF THE GEOTEXTILE FABRIC FILTER AT LEAST SIX INCHES LOWER THAN THE GROUND ELEVATION ON THE DOWN–SLOPE SIDE OF THE STORM DRAIN INLET,
   - BUILD A TEMPORARY DIKE, COMPACTED TO SIX INCHES HIGHER THAN THE FABRIC, ON THE DOWN–SLOPE SIDE OF THE STORM DRAIN INLET, AND/OR
   - USE IN CONJUNCTION WITH EXCAVATED DROP INLET PROTECTION.

MAINTENANCE
- INSPECT DAILY.
- INSPECT GEOTEXTILE FABRIC AND MAKE NEEDED REPAIRS IMMEDIATELY.
- REMOVE SEDIMENT FROM POOL AREA TO PROVIDE STORAGE FOR THE NEXT STORM EVENT. AVOID DAMAGING OR UNDERCUTTING FABRIC DURING SEDIMENT REMOVAL.
- WHEN CONTRIBUTING DRAINAGE AREA HAS BEEN STABILIZED, REMOVE SEDIMENT, PROPERLY DISPOSE OF ALL CONSTRUCTION MATERIAL, GRADE AREA TO THE ELEVATION OF THE STORM DRAIN INLET TOP, THEN STABILIZE IMMEDIATELY.



NOTE: THIS MEASURE IS NOT RECOMMENDED FOR PAVED SURFACES DUE TO INABILITY TO ENTRENCH THE FABRIC AND LACK OF AN ANCHORING SYSTEM.



SILT FENCE INLET PROTECTION

NOT TO SCALE (REV. 01/17)

GDI CONSTRUCTION
9775 Crosspoint Blvd
Suite 105
Indianapolis, IN 46256
317.567.6100

AMERICAN STRUCTUREPOINT INC.
9025 River Road, Suite 200 | Indianapolis, Indiana 46240
TEL 317.547.5580 | FAX 317.543.0270
www.structurepoint.com

I-65 SOUTH LOGISTICS CENTER LOT 1

81/89 Forest Road
Franklin, Indiana

CERTIFIED BY

ISSUANCE INDEX
DATE:
12/03/2020
PROJECT PHASE:
CONSTRUCTION DOCUMENTS

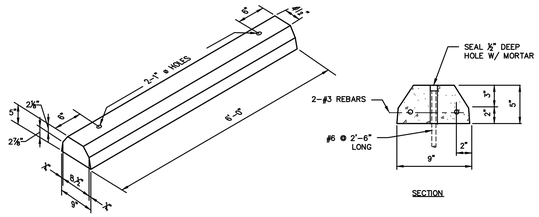
REVISION SCHEDULE		
NO.	DESCRIPTION	DATE

Project Number 2019.02798

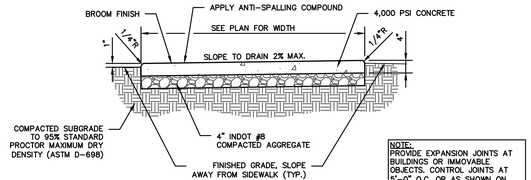
EROSION CONTROL DETAILS

C521

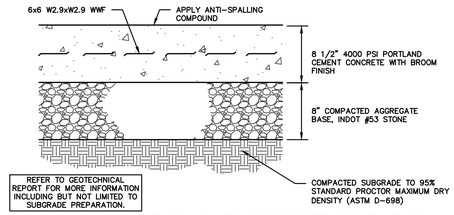
PLOT DATE: 12/3/2020 1:08 PM
PLOT SCALE: 12.5849
EDIT DATE: 3/13/2020
EDITED BY: DVALLACE
DRAWING FILE: P:\2019\02798\D Drawings\Civil\Construction Documents\2019.02798 CE C520 ECD.dwg



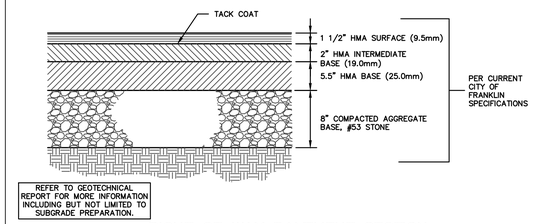
CONCRETE WHEEL STOPS
NOT TO SCALE (REV. 01/17)



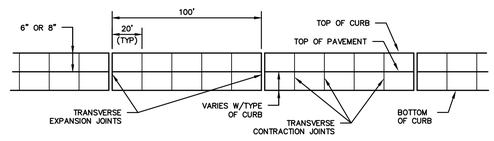
CONCRETE SIDEWALK
NOT TO SCALE (REV. 10/17)



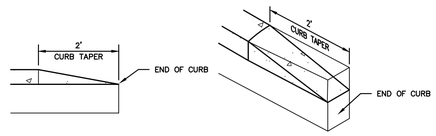
HEAVY DUTY CONCRETE PAVEMENT
NOT TO SCALE (REV. 06/17)



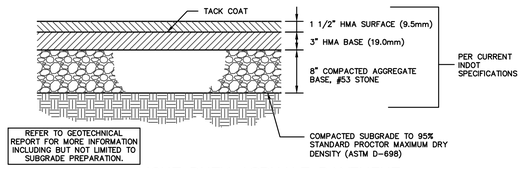
RIGHT OF WAY PAVEMENT SECTION
NOT TO SCALE (REV. 06/17)



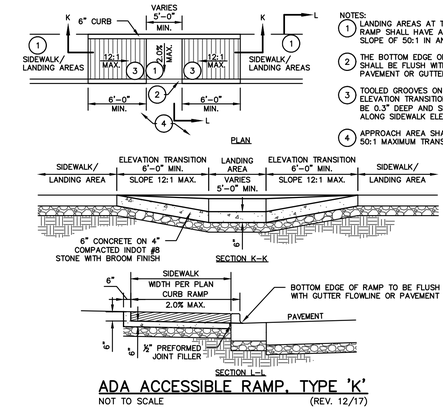
CURB JOINT DETAIL
NOT TO SCALE (REV. 01/17)



CURB TAPER DETAIL
NOT TO SCALE (REV. 01-17)



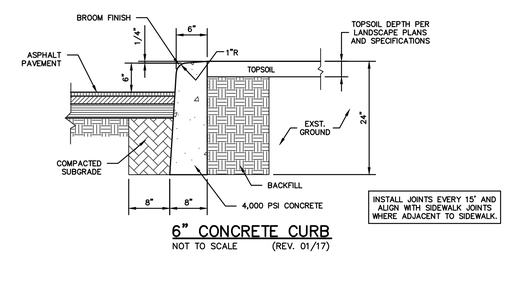
LIGHT DUTY ASPHALT PAVEMENT
NOT TO SCALE (REV. 09/19)



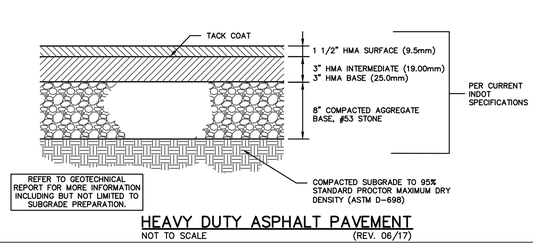
ADA ACCESSIBLE RAMP, TYPE 'K'
NOT TO SCALE (REV. 12/17)



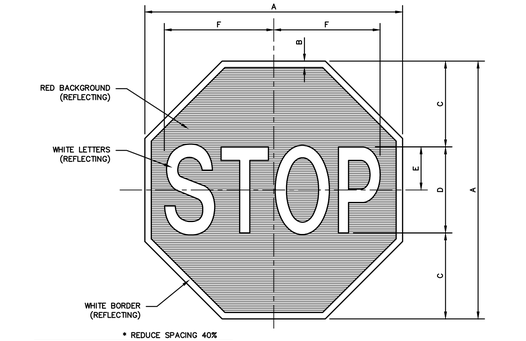
ADA ACCESSIBLE PARKING SIGN DETAIL
NOT TO SCALE (REV. 01/17)



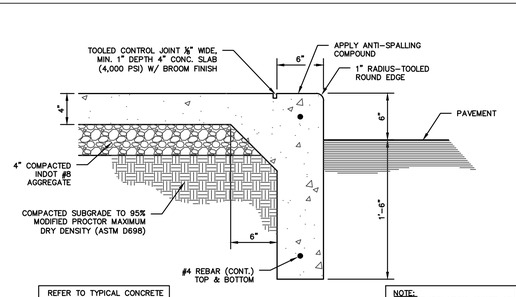
6" CONCRETE CURB
NOT TO SCALE (REV. 01/17)



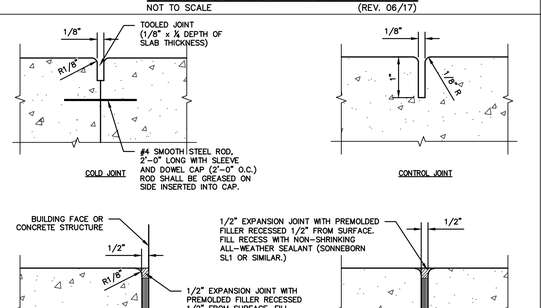
HEAVY DUTY ASPHALT PAVEMENT
NOT TO SCALE (REV. 06/17)



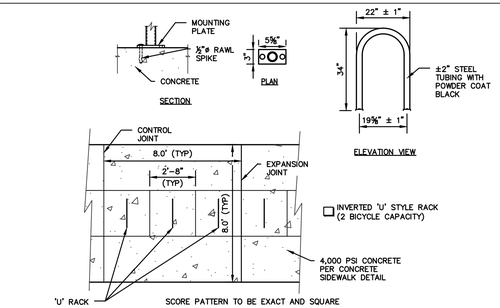
STOP SIGN DETAIL
NOT TO SCALE (REV. 05/18)



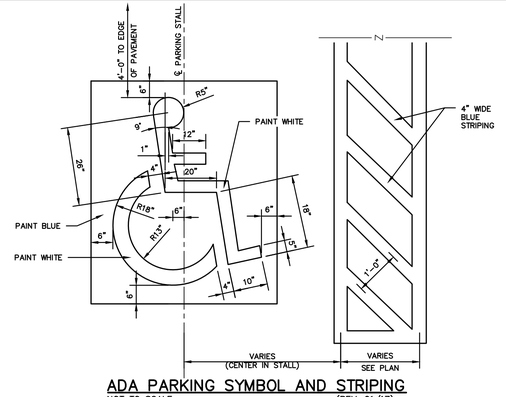
COMBINED CONCRETE CURB AND WALK
NOT TO SCALE (REV. 01/17)



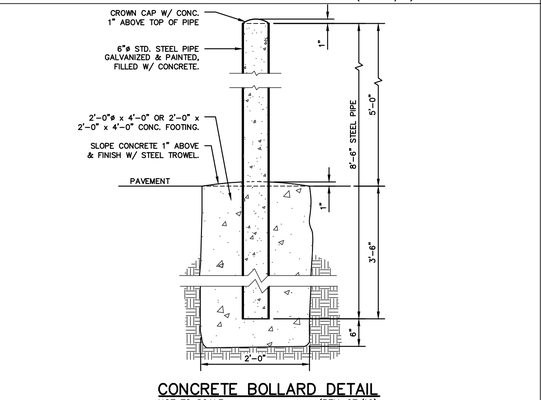
TYPICAL CONCRETE JOINT DETAILS
NOT TO SCALE (REV. 01/17)



BIKE RACK ('U' STYLE)
NOT TO SCALE (REV. 01/17)



ADA PARKING SYMBOL AND STRIPING
NOT TO SCALE (REV. 01/17)



CONCRETE BOLLARD DETAIL
NOT TO SCALE (REV. 07/19)

GDI CONSTRUCTION
9775 Crosspoint Blvd
Suite 105
Indianapolis, IN 46256
317.567.6100

AMERICAN STRUCTUREPOINT INC.
9025 River Road, Suite 200 | Indianapolis, Indiana 46240
TEL 317.547.5580 | FAX 317.543.0270
www.structurepoint.com

I-65 SOUTH LOGISTICS CENTER LOT 1

81/89 Forest Road
Franklin, Indiana

JUSTIN ERIC OLAH REGISTERED NOTARIAL SEAL PUBLIC SEAL NOTARY PUBLIC NOT FOR CONSTRUCTION APPROVED PRINTING PROFESSIONAL ENGINEER

CERTIFIED BY

ISSUANCE INDEX
DATE:
12/03/2020
PROJECT PHASE:
CONSTRUCTION DOCUMENTS

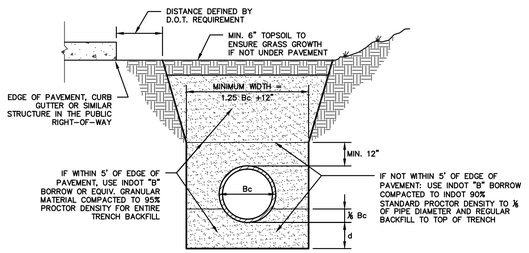
REVISION SCHEDULE		
NO.	DESCRIPTION	DATE

Project Number 2019.02798

SITE DETAILS

C600

PLOT DATE: 12/3/2020 1:08 PM
PLOT SCALE: 1:2.5849
EDIT DATE: 12/2/2020
EDITED BY: MRVING
DRAWING FILE: P:\2019\02798\D Drawings\Civil\Construction Documents\2019.02798 CE C600 SD.dwg



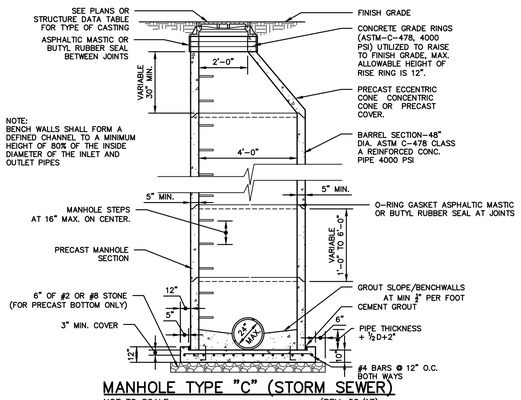
LEGEND
Bc= OUTSIDE DIAMETER
D= INSIDE DIAMETER
d= DEPTH OF BEDDING MATERIAL BELOW PIPE

NOTE:
ALL INITIAL BACKFILL SHALL BE INSTALLED IN 6" TO 12" BALANCED LIFTS.

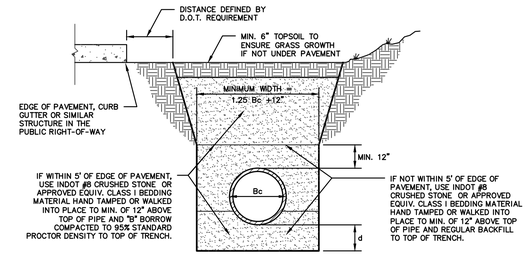
A MINIMUM 9" OF CLEARANCE SHALL BE PROVIDED ON EACH SIDE OF THE INSTALLED PIPE.

DEPTH OF BEDDING MATERIAL BELOW PIPE	
D	d (MIN)
27" & SMALLER	3"
30" TO 60"	4"
66" & LARGER	6"

REINFORCED CONCRETE PIPE (RCP) BEDDING DETAIL
NOT TO SCALE (REV. 12/17)



MANHOLE TYPE "C" (STORM SEWER)
NOT TO SCALE (REV. 06/17)



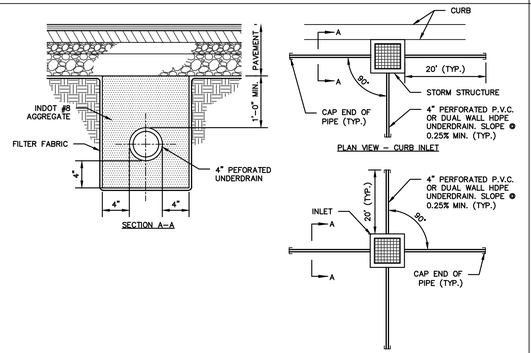
LEGEND
Bc= OUTSIDE DIAMETER
D= INSIDE DIAMETER
d= DEPTH OF BEDDING MATERIAL BELOW PIPE

NOTE:
ALL INITIAL BACKFILL SHALL BE INSTALLED IN 6" TO 12" BALANCED LIFTS.

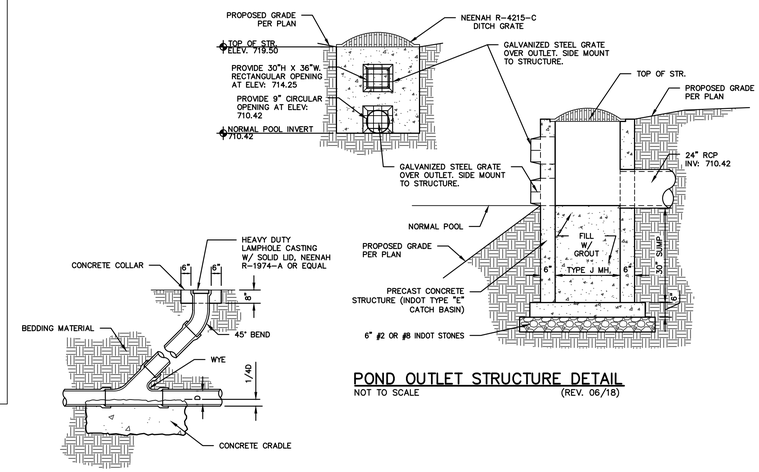
A MINIMUM 9" OF CLEARANCE SHALL BE PROVIDED ON EACH SIDE OF THE INSTALLED PIPE.

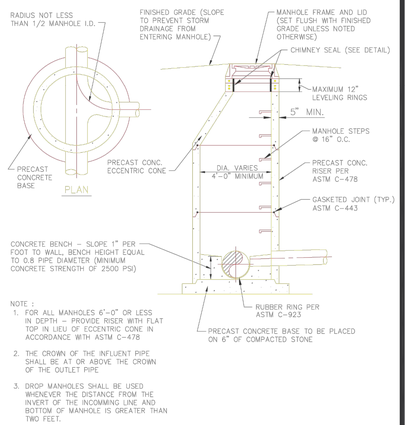
DEPTH OF BEDDING MATERIAL BELOW PIPE	
D	d (MIN)
27" & SMALLER	4"
30" TO 60"	4"
66" & LARGER	4"

PLASTIC PIPE (PVC & HDPE) BEDDING DETAIL
NOT TO SCALE (REV. 12/17)



PAVEMENT UNDERDRAIN DETAIL
NOT TO SCALE (REV. 07/18)


PROPOSED GRADE PER PLAN
TOP OF STR. ELEV. 719.50
NEENAH R-4215-C DITCH GRATE
GALVANIZED STEEL GRATE OVER OUTLET. SIDE MOUNT TO STRUCTURE.
PROVIDE 30"H X 36"W. RECTANGULAR OPENING AT ELEV. 714.25
PROVIDE 9" CIRCULAR OPENING AT ELEV: 710.42
NORMAL POOL INVERT ELEV. 710.42
TOP OF STR.
PROPOSED GRADE PER PLAN
24" RCP INV: 710.42
GALVANIZED STEEL GRATE OVER OUTLET. SIDE MOUNT TO STRUCTURE.
NORMAL POOL
PROPOSED GRADE PER PLAN
FILL W/ GROUT
TYPE J MH.
6"
6"
6"



STANDARD MANHOLE DETAIL

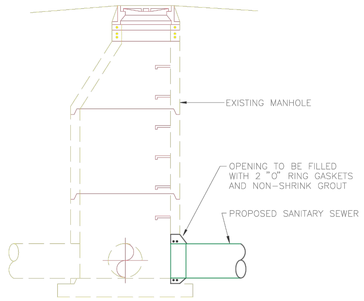
REVISION DATE

CITY of FRANKLIN, INDIANA

DPW

FIGURE

Illustration 5-1



TYPICAL EXISTING MANHOLE ENTRY DETAIL

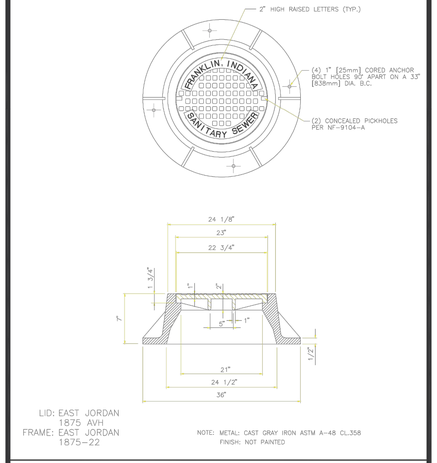
REVISION DATE

CITY of FRANKLIN, INDIANA

DPW

FIGURE

Illustration 5-5



STANDARD FRAME AND LID

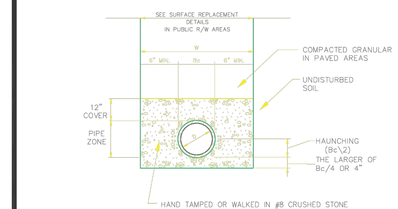
REVISION DATE

CITY of FRANKLIN, INDIANA

DPW

FIGURE

Illustration 5-8



FIRST CLASS PIPE LAYING METHOD FOR:
1) FLEXIBLE (PVC, RPVC, ABS & HDPE PIPE) AND
2) DUCTILE IRON WITHIN PVM'T LIMITS

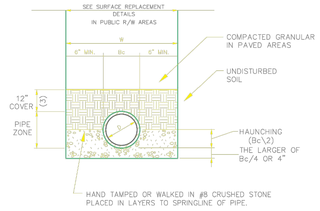
REVISION DATE

CITY of FRANKLIN, INDIANA

DPW

FIGURE

Illustration 7-1



FIRST CLASS PIPE LAYING METHOD FOR:
RIGID CONDUITS (RCP & CMP)

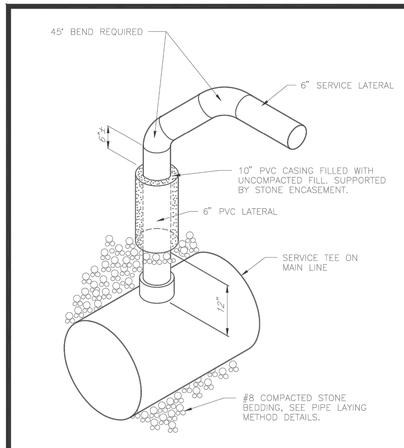
REVISION DATE

CITY of FRANKLIN, INDIANA

DPW

FIGURE

Illustration 7-2



DEEP LATERAL INSTALLATION OVER 15' DEEP (ALT. #1)

REVISION DATE

CITY of FRANKLIN, INDIANA

DPW

FIGURE

Illustration 7-5

GDI CONSTRUCTION
9775 Crosspoint Blvd
Suite 105
Indianapolis, IN 46256
317.567.6100

AMERICAN STRUCTUREPOINT INC.
9025 River Road, Suite 200 | Indianapolis, Indiana 46240
TEL 317.547.5580 | FAX 317.543.0270
www.structurepoint.com

I-65 SOUTH LOGISTICS CENTER LOT 1

81/89 Forest Road
Franklin, Indiana

JUSTIN ERIC OLAH
REGISTERED
NO.
PE11800021
STATE OF INDIANA
PROFESSIONAL ENGINEER
AFFIXING OF THIS SEAL TO THIS DOCUMENT DOES NOT INCLUDE ITS USE BY ANY PROFESSIONAL ENGINEER

CERTIFIED BY

ISSUANCE INDEX
DATE:
12/03/2020
PROJECT PHASE:
CONSTRUCTION DOCUMENTS

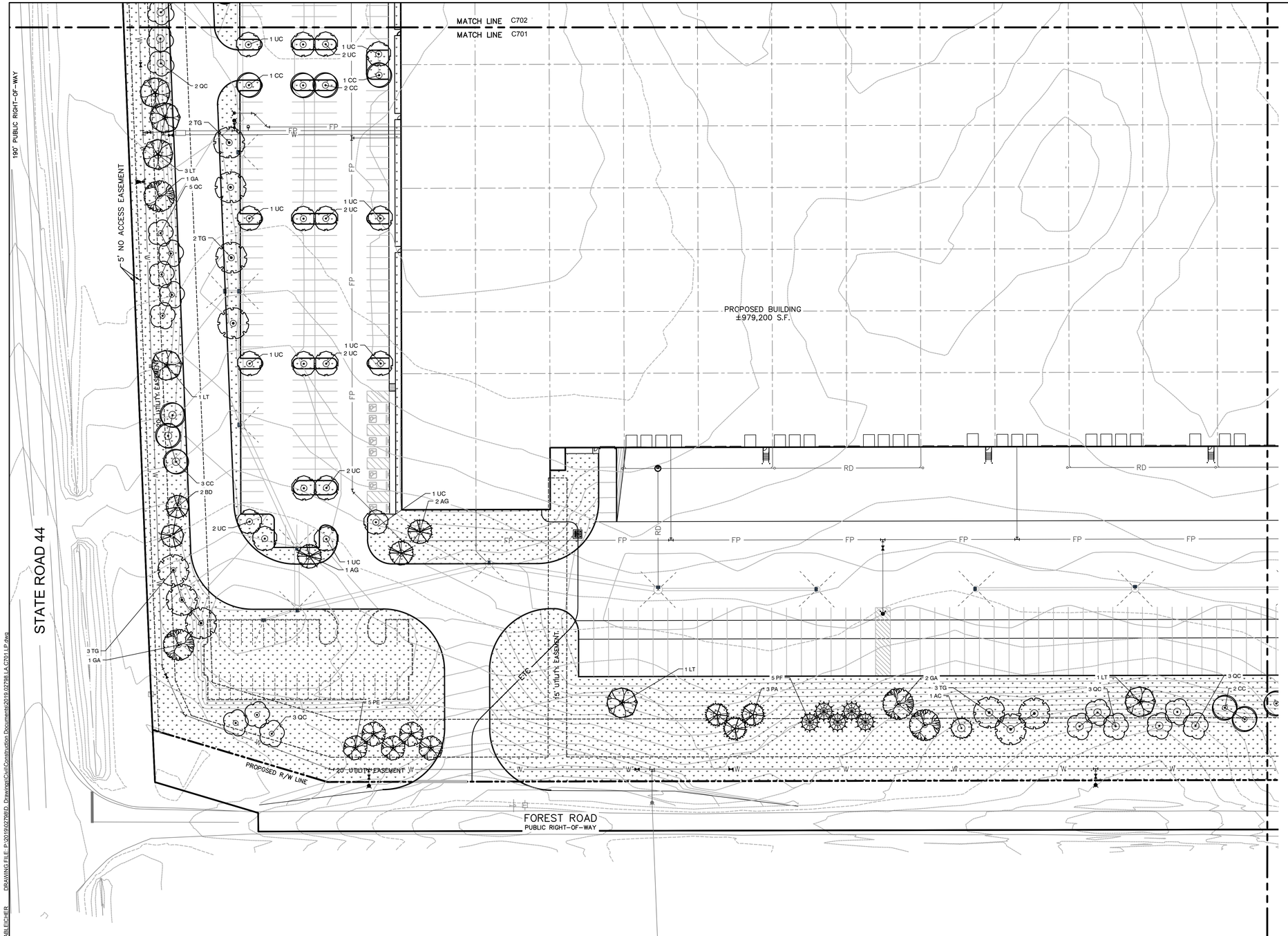
REVISION SCHEDULE		
NO.	DESCRIPTION	DATE

Project Number 2019.02798

CITY OF FRANKLIN STANDARD DETAILS

C602

PLOT DATE: 12/3/2020 1:09 PM
PLOT SCALE: 1:2.5849
EDIT DATE: 12/2/2020
EDITED BY: MRVING
DRAWING FILE: P:\2019\02798\D Drawings\Civil\Construction Documents\2019.02798 CE C600 SD.dwg



0' 40' 80'

SCALE: 1"=40'

GENERAL NOTES:

1. CONTRACTOR TO VERIFY ALL UTILITY LOCATIONS IN THE FIELD PRIOR TO BEGINNING WORK. CONTRACTOR IS RESPONSIBLE FOR ANY DAMAGE TO UTILITIES ASSOCIATED WITH WORK. UTILITIES SHALL BE REPAIRED TO SATISFACTION OF THE UTILITY OWNER AND/OR OPERATING AUTHORITY AT NO ADDITIONAL COST.
2. A MINIMUM OF 4" OF TOPSOIL @ TOPSOIL, ½ MULCH AND SOIL CONDITIONER) SHALL BE PLACED ON ALL AREAS TO BE SEEDED, SODDED AND PLANTED. PLANTING SOIL MIX SHALL BE FREE FROM SUBSOIL, VEGETATION, WEEDS OR ANY EXTRANEOUS OR DELETERIOUS MATERIALS LARGER THAN 1". REMOVE ANY UNSUITABLE AND EXCESS TOPSOIL, AS DETERMINED BY SOILS ENGINEER, FROM THE SITE. FURNISH ANY ADDITIONAL TOPSOIL NEEDED AT NO ADDITIONAL COST. ADDED TOPSOIL SHALL BE INCORPORATED INTO EXISTING SOIL.
3. IN CASE OF DISCREPANCIES BETWEEN THE PLAN AND THE PLANT LIST, THE PLAN SHALL DICTATE. IF IN QUESTION, CONTACT THE LANDSCAPE ARCHITECT.
4. ALL PLANTING BEDS SHALL HAVE A 3" THICK LAYER OF SHREDDED HARDWOOD BARK MULCH. NO UTILITY MULCH OR PROCESSED TREE TRIMMINGS WILL BE ALLOWED. ALL PLANTING BEDS SHALL HAVE PRE-EMERGENT HERBICIDE APPLIED AS PER MANUFACTURER'S RECOMMENDATION, AFTER INSTALLATION IS COMPLETE.
5. FINAL PLACEMENT OF PLANT MATERIALS, ETC. SHALL BE APPROVED BY LANDSCAPE ARCHITECT BEFORE PLANTING OPERATIONS ARE TO PROCEED. ALL TREE LOCATIONS SHALL BE MARKED WITH A WOODEN STAKE INDICATING VARIETY AND SIZE OF TREE.
6. NO SUBSTITUTIONS OF PLANT MATERIAL WILL BE ALLOWED. IF PLANTS ARE SHOWN TO BE UNAVAILABLE, THE CONTRACTOR SHALL NOTIFY LANDSCAPE ARCHITECT PRIOR TO BID DATE IN WRITING. ALL PLANTS SHALL BE INSPECTED AND TAGGED WITH PROJECT IDENTIFICATION AT NURSERY OR CONTRACTOR'S OPERATION PRIOR TO MOVING TO JOB SITE. PLANTS MAY ALSO BE INSPECTED AND APPROVED OR REJECTED ON THE JOB SITE.
7. ALL PLANTS ARE TO MEET OR EXCEED AMERICAN STANDARDS FOR NURSERY STOCK, 2004 EDITION, AS SET FORTH BY AMERICAN ASSOCIATION OF NURSERYMEN.
8. PLANTINGS SHOULD BE INSTALLED BETWEEN APRIL 1ST AND MAY 31ST, OR BETWEEN SEPTEMBER 1ST AND OCTOBER 31ST TO AVOID UNFAVORABLE WEATHER CONDITIONS. LANDSCAPE AND TURF PLANTED OUTSIDE OF THESE PERIODS WILL REQUIRE ADDITIONAL MEASURES TO MAINTAIN ACCEPTABLE HEALTH.
9. PLANTS AND ALL OTHER MATERIALS TO BE STORED ON SITE WILL BE PLACED WHERE THEY WILL NOT CONFLICT WITH CONSTRUCTION AND AS DIRECTED BY OWNER.
10. ALL NEW LANDSCAPE PLANTINGS SHALL BE GUARANTEED FOR A PERIOD OF ONE YEAR FOLLOWING FINAL INSPECTION BY LANDSCAPE ARCHITECT. AT END OF THIS PERIOD, PLANT MATERIAL TERMED DEAD OR UNSATISFACTORY BY LANDSCAPE ARCHITECT SHALL BE REPLACED AT NO ADDITIONAL CHARGE BY THE LANDSCAPE CONTRACTOR.
11. ALL DISTURBED LAWN AREAS SHALL BE SEEDED OR SODDED AS SHOWN PER THE LANDSCAPE AND EROSION CONTROL PLANS.
12. LAWN AND SOD AREAS ARE TO BE GRADED UNIFORMLY WITHOUT ANY UNDULATIONS OR IRREGULARITIES IN THE SURFACE PRIOR TO ANY SEED OR SOD WORK.
13. ALL LAWN IS TO BE A BLEND PER THE PLANT SCHEDULE. SEED AREAS ARE TO HAVE 0% NOXIOUS WEED AND FREE OF DISEASE.
14. PROTECT LAWN SEEDED AREAS WITH STRAW MULCH. SPREAD MULCH UNIFORMLY AT A MINIMUM RATE OF 2 TONS PER ACRE TO FORM A CONTINUOUS BLANKET 1 ½ INCHES IN LOOSE THICKNESS OVER SEEDED AREAS.

LANDSCAPE LEGEND

- DECIDUOUS SHADE TREE
- EVERGREEN TREE
- SHRUBS AND ORNAMENTAL GRASSES
- MULCH BED/ TREE RING (DOUBLE-SHREDDED HARDWOOD BARK MULCH)
- SPADE EDGE SEE DETAIL 04 ON SHEET C710

ORDINANCE NOTES

STREET TREES:
- (1) TREE REQUIRED PER 35 LF OF FRONTAGE

STATE ROAD 44: (1,243 LF): 35.5 TREES REQUIRED / 36 TREES PROVIDED
FOREST DRIVE. (1,950 LF): 55.7 TREES REQUIRED / 79 TREES PROVIDED

LOT INTERIOR LANDSCAPE:
TREES PROVIDED: 226 TREES

PARKING LOT PERIMETER
MINIMUM 10' BUFFER FROM ALL R.O.W. PLANTINGS REQUIRED FOR MULTI-FAMILY AND COMMERCIAL USES. PERIMETER SHRUBS NOT REQUIRED.

PARKING LOT INTERIOR:
5% OPEN SPACE REQUIRED FOR ALL PAVED SURFACES; ALL ISLANDS ARE TO BE A MINIMUM OF 300 SF; (1) SHADE TREE REQUIRED PER 300 SF.

TOTAL IMPERVIOUS DRIVE AREA: 741,154 SF
REQUIRED OPEN SPACE (5.0%): 37,057 SF / PROVIDED (5.25%): 38,912 SF

CONCEPT PLANT SCHEDULE

LAWN SEED- SUN AND PARTIAL SHADE MIX See general notes for additional lawn seed mixes and installation requirements.		1,022,122 sf
Festuca arundinacea / Turf Type Fescue Hybrid		817,697 sf
Poa pratensis / Kentucky Bluegrass Hybrid		204,424 sf

PLANT SCHEDULE

EVERGREEN TREES	QTY	BOTANICAL / COMMON NAME	COND.	SIZE	SPACING
AC	1	Abies concolor / White Fir	Cont, B&B	6` HT	As shown
PA	6	Picea abies / Norway Spruce	Cont, B&B	6` HT	As shown
PF	10	Pinus flexilis `Vanderwolf`s Pyramid` / Vanderwolf`s Pyramid Pine	Cont, B&B	6` HT	As shown
SHADE TREES	**QTY**	**BOTANICAL / COMMON NAME**	**COND.**	**SIZE**	**SPACING**
AG	31	Acer saccharum `Green Mountain` TM / Green Mountain Sugar Maple	B & B	2.5" Cal.	As shown
BD	28	Betula nigra `BNMTF` TM / Dura Heat River Birch - Multi-Stem; 3 to 5 Canes	B & B	8` HT.	As shown
CC	24	Carpinus caroliniana / American Hornbeam	B & B	2.5" Cal.	As shown
GA	9	Ginkgo biloba `Autumn Gold` TM / Maidenhair Tree	B & B	2.5" Cal.	As shown
LT	16	Liriodendron tulipifera / Tulip Tree	B & B	2.5" Cal.	As shown
PO	10	Platanus occidentalis / American Sycamore	B & B	2.5" Cal.	As Shown
PE	11	Platanus x acerifolia `Exclamation` TM / Exclamation London Plane Tree	B & B	2.5" Cal.	As shown
QC	25	Quercus coccinea / Scarlet Oak	B & B	2.5" Cal.	As shown
TA	14	Taxodium distichum `Autumn Gold` / Autumn Gold Bald Cypress	B & B	2.5" Cal.	As Shown
TG	18	Tilia cordata `Greenspire` / Greenspire Littleleaf Linden	B & B	2.5" Cal.	As shown
UC	23	Ulmus x `Frontier` / Frontier Hybrid Elm	B & B	2.5" Cal.	As shown

GDI CONSTRUCTION
9775 Crosspoint Blvd
Suite 105
Indianapolis, IN 46256
317.567.6100

AMERICAN STRUCTUREPOINT INC.
9025 River Road, Suite 200 | Indianapolis, Indiana 46240
TEL 317.547.5580 | FAX 317.543.0270
www.structurepoint.com

I-65 SOUTH LOGISTICS CENTER LOT 1

81/89 Forest Road
Franklin, Indiana

ARTHUR E. BLEICHER REGISTERED LANDSCAPE ARCHITECT STATE OF INDIANA LA21400008 PROFESSIONAL ENGINEER NOT FOR CONSTRUCTION

CERTIFIED BY

ISSUANCE INDEX
DATE:
12/03/2020
PROJECT PHASE:
CONSTRUCTION DOCUMENTS

REVISION SCHEDULE		
NO.	DESCRIPTION	DATE

Project Number 2019.02798

LANDSCAPE PLAN

C701

PLOT DATE: 12/1/2020 10:22 AM
PLOT SCALE: 1:2.5849
EDIT DATE: 11/30/2020
EDITED BY: ABLEICHER
DRAWING FILE: P:\2019\02798\D Drawings\Civil\Construction Documents\2019.02798 LA C701 LP.dwg

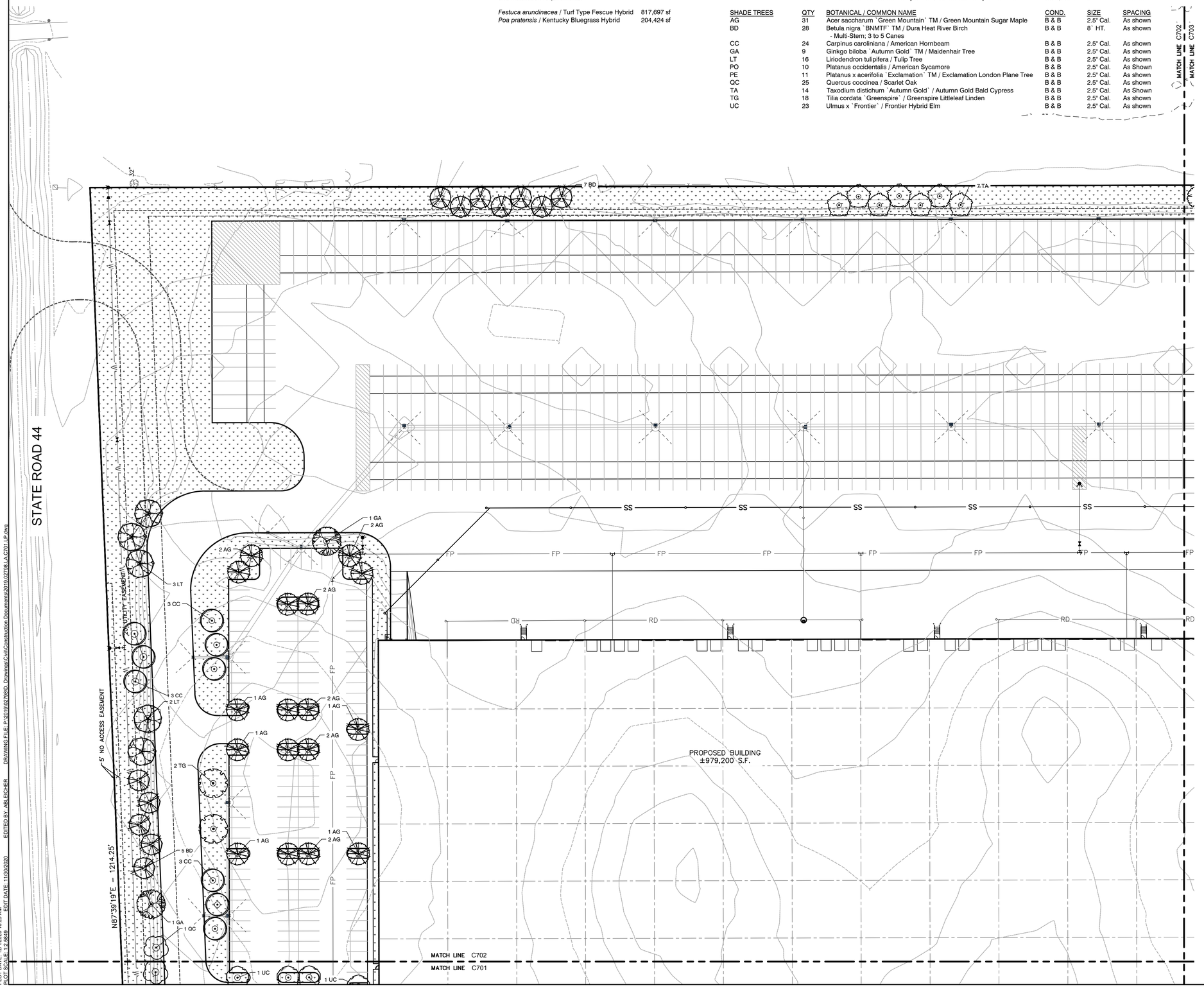
CONCEPT PLANT SCHEDULE

	LAWN SEED- SUN AND PARTIAL SHADE MIX See general notes for additional lawn seed mixes and installation requirements.	1,022,122 sf
	Festuca arundinacea / Turf Type Fescue Hybrid	817,697 sf
	Poa pratensis / Kentucky Bluegrass Hybrid	204,424 sf

PLANT SCHEDULE

EVERGREEN TREES	QTY	BOTANICAL / COMMON NAME	COND.	SIZE	SPACING
AC	1	Abies concolor / White Fir	Cont, B&B	6` HT	As shown
PA	6	Picea abies / Norway Spruce	Cont, B&B	6` HT	As shown
PF	10	Pinus flexilis `Vanderwolf`s Pyramid` / Vanderwolf`s Pyramid Pine	Cont, B&B	6` HT	As shown

SHADE TREES	QTY	BOTANICAL / COMMON NAME	COND.	SIZE	SPACING
AG	31	Acer saccharum `Green Mountain` TM / Green Mountain Sugar Maple	B & B	2.5" Cal.	As shown
BD	28	Betula nigra `BNMTF` TM / Dura Heat River Birch - Multi-Stem; 3 to 5 Canes	B & B	8` HT.	As shown
CC	24	Carpinus caroliniana / American Hornbeam	B & B	2.5" Cal.	As shown
GA	9	Ginkgo biloba `Autumn Gold` TM / Maidenhair Tree	B & B	2.5" Cal.	As shown
LT	16	Liriodendron tulipifera / Tulip Tree	B & B	2.5" Cal.	As shown
PO	10	Platanus occidentalis / American Sycamore	B & B	2.5" Cal.	As Shown
PE	11	Platanus x acerifolia `Exclamation` TM / Exclamation London Plane Tree	B & B	2.5" Cal.	As shown
QC	25	Quercus coccinea / Scarlet Oak	B & B	2.5" Cal.	As shown
TA	14	Taxodium distichum `Autumn Gold` / Autumn Gold Bald Cypress	B & B	2.5" Cal.	As Shown
TG	18	Tilia cordata `Greenspire` / Greenspire Littleleaf Linden	B & B	2.5" Cal.	As shown
UC	23	Ulmus x `Frontier` / Frontier Hybrid Elm	B & B	2.5" Cal.	As shown



0' 40' 80'

SCALE: 1"=40'

GENERAL NOTES:

1. CONTRACTOR TO VERIFY ALL UTILITY LOCATIONS IN THE FIELD PRIOR TO BEGINNING WORK. CONTRACTOR IS RESPONSIBLE FOR ANY DAMAGE TO UTILITIES ASSOCIATED WITH WORK. UTILITIES SHALL BE REPAIRED TO SATISFACTION OF THE UTILITY OWNER AND/OR OPERATING AUTHORITY AT NO ADDITIONAL COST.
2. A MINIMUM OF 4" OF TOPSOIL (6 TOPSOIL : 1 MULCH AND SOIL CONDITIONER) SHALL BE PLACED ON ALL AREAS TO BE SEEDED, SODDED AND PLANTED. PLANTING SOIL MIX SHALL BE FREE FROM SUBSOIL, VEGETATION, WEEDS OR ANY EXTRANEOUS OR DELETERIOUS MATERIALS LARGER THAN 1". REMOVE ANY UNSUITABLE AND EXCESS TOPSOIL, AS DETERMINED BY SOILS ENGINEER, FROM THE SITE. FURNISH ANY ADDITIONAL TOPSOIL NEEDED AT NO ADDITIONAL COST. ADDED TOPSOIL SHALL BE INCORPORATED INTO EXISTING SOIL.
3. IN CASE OF DISCREPANCIES BETWEEN THE PLAN AND THE PLANT LIST, THE PLAN SHALL DICTATE. IF IN QUESTION, CONTACT THE LANDSCAPE ARCHITECT.
4. ALL PLANTING BEDS SHALL HAVE A 3" THICK LAYER OF SHREDDED HARDWOOD BARK MULCH. NO UTILITY MULCH OR PROCESSED TREE TRIMMINGS WILL BE ALLOWED. ALL PLANTING BEDS SHALL HAVE PRE-EMERGENT HERBICIDE APPLIED AS PER MANUFACTURER'S RECOMMENDATION, AFTER INSTALLATION IS COMPLETE.
5. FINAL PLACEMENT OF PLANT MATERIALS, ETC. SHALL BE APPROVED BY LANDSCAPE ARCHITECT BEFORE PLANTING OPERATIONS ARE TO PROCEED. ALL TREE LOCATIONS SHALL BE MARKED WITH A WOODEN STAKE INDICATING VARIETY AND SIZE OF TREE.
6. NO SUBSTITUTIONS OF PLANT MATERIAL WILL BE ALLOWED. IF PLANTS ARE SHOWN TO BE UNAVAILABLE, THE CONTRACTOR SHALL NOTIFY LANDSCAPE ARCHITECT PRIOR TO BID DATE IN WRITING. ALL PLANTS SHALL BE INSPECTED AND TAGGED WITH PROJECT IDENTIFICATION AT NURSERY OR CONTRACTORS OPERATION PRIOR TO MOVING TO JOB SITE. PLANTS MAY ALSO BE INSPECTED AND APPROVED OR REJECTED ON THE JOB SITE.
7. ALL PLANTS ARE TO MEET OR EXCEED AMERICAN STANDARDS FOR NURSERY STOCK, 2004 EDITION, AS SET FORTH BY AMERICAN ASSOCIATION OF NURSERYMEN.
8. PLANTINGS SHOULD BE INSTALLED BETWEEN APRIL 1ST AND MAY 31ST, OR BETWEEN SEPTEMBER 1ST AND OCTOBER 31ST TO AVOID UNFAVORABLE WEATHER CONDITIONS. LANDSCAPE AND TURF PLANTED OUTSIDE OF THESE PERIODS WILL REQUIRE ADDITIONAL MEASURES TO MAINTAIN ACCEPTABLE HEALTH.
9. PLANTS AND ALL OTHER MATERIALS TO BE STORED ON SITE WILL BE PLACED WHERE THEY WILL NOT CONFLICT WITH CONSTRUCTION AND AS DIRECTED BY OWNER.
10. ALL NEW LANDSCAPE PLANTINGS SHALL BE GUARANTEED FOR A PERIOD OF ONE YEAR FOLLOWING FINAL INSPECTION BY LANDSCAPE ARCHITECT. AT END OF THIS PERIOD, PLANT MATERIAL TERMED DEAD OR UNSATISFACTORY BY LANDSCAPE ARCHITECT SHALL BE REPLACED AT NO ADDITIONAL CHARGE BY THE LANDSCAPE CONTRACTOR.
11. ALL DISTURBED LAWN AREAS SHALL BE SEEDED OR SODDED AS SHOWN PER THE LANDSCAPE AND EROSION CONTROL PLANS.
12. LAWN AND SOD AREAS ARE TO BE GRADED UNIFORMLY WITHOUT ANY UNDULATIONS OR IRREGULARITIES IN THE SURFACE PRIOR TO ANY SEED OR SOD WORK.
13. ALL LAWN IS TO BE A BLEND PER THE PLANT SCHEDULE. SEED AREAS ARE TO HAVE 0% NOXIOUS WEED AND FREE OF DISEASE.
14. PROTECT LAWN SEEDED AREAS WITH STRAW MULCH. SPREAD MULCH UNIFORMLY AT A MINIMUM RATE OF 2 TONS PER ACRE TO FORM A CONTINUOUS BLANKET 1½ INCHES IN LOOSE THICKNESS OVER SEEDED AREAS.

LANDSCAPE LEGEND

- DECIDUOUS SHADE TREE
- EVERGREEN TREE
- SHRUBS AND ORNAMENTAL GRASSES
- MULCH BED/ TREE RING (DOUBLE-SHREDDED HARDWOOD BARK MULCH)
- SPADE EDGE SEE DETAIL 04 ON SHEET C710

ORDINANCE NOTES

STREET TREES:
- (1) TREE REQUIRED PER 35 LF OF FRONTAGE

STATE ROAD 44: (1,243 LF): 35.5 TREES REQUIRED / 36 TREES PROVIDED
FOREST DRIVE: (1,950 LF): 55.7 TREES REQUIRED / 79 TREES PROVIDED

LOT INTERIOR LANDSCAPE:
TREES PROVIDED: 226 TREES

PARKING LOT PERIMETER
MINIMUM 10' BUFFER FROM ALL R.O.W. PLANTINGS REQUIRED FOR MULTI-FAMILY AND COMMERCIAL USES. PERIMETER SHRUBS NOT REQUIRED.

PARKING LOT INTERIOR:
5% OPEN SPACE REQUIRED FOR ALL PAVED SURFACES; ALL ISLANDS ARE TO BE A MINIMUM OF 300 SF; (1) SHADE TREE REQUIRED PER 300 SF.

TOTAL IMPERVIOUS DRIVE AREA: 741,154 SF
REQUIRED OPEN SPACE (5.0%): 37,057 SF / PROVIDED (5.25%): 38,912 SF

GDI CONSTRUCTION
9775 Crosspoint Blvd
Suite 105
Indianapolis, IN 46256
317.567.6100

AMERICAN STRUCTUREPOINT INC.
9025 River Road, Suite 200 | Indianapolis, Indiana 46240
TEL 317.547.5580 | FAX 317.543.0270
www.structurepoint.com

I-65 SOUTH LOGISTICS CENTER LOT 1

81/89 Forest Road
Franklin, Indiana

ARTHUR E. BLEICHER REGISTERED LANDSCAPE ARCHITECT STATE OF INDIANA

CERTIFIED BY

ISSUANCE INDEX
DATE:
12/03/2020
PROJECT PHASE:
CONSTRUCTION DOCUMENTS

REVISION SCHEDULE		
NO.	DESCRIPTION	DATE

Project Number 2019.02798

LANDSCAPE PLAN

C702

PLOT DATE: 12/1/2020 10:25 AM
PLOT SCALE: 1:2.5849
EDIT DATE: 11/30/2020
EDITED BY: ABLEICHER
DRAWING FILE: P:\2019\02798\D. Drawings\Civil\Construction Documents\2019.02798 LA C701 LP.dwg

CONCEPT PLANT SCHEDULE

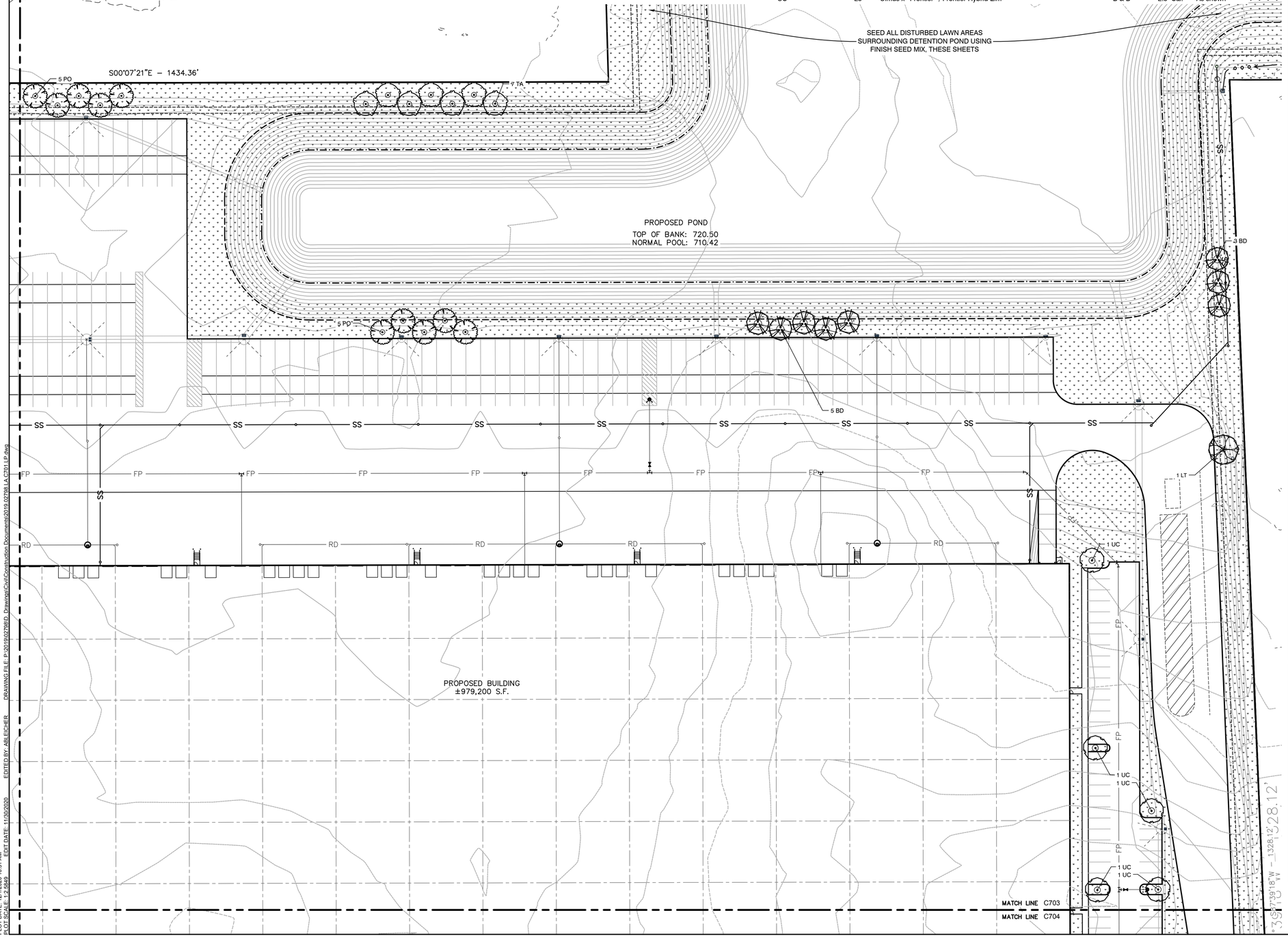
LAWN SEED- SUN AND PARTIAL SHADE MIX 1,022,122 sf
See general notes for additional lawn seed mixes and installation requirements.

Festuca arundinacea / Turf Type Fescue Hybrid 817,697 sf
Poa pratensis / Kentucky Bluegrass Hybrid 204,424 sf

PLANT SCHEDULE

EVERGREEN TREES	QTY	BOTANICAL / COMMON NAME	COND.	SIZE	SPACING
AC	1	Abies concolor / White Fir	Cont, B&B	6` HT	As shown
PA	6	Picea abies / Norway Spruce	Cont, B&B	6` HT	As shown
PF	10	Pinus flexilis `Vanderwolf`s Pyramid` / Vanderwolf`s Pyramid Pine	Cont, B&B	6` HT	As shown

SHADE TREES	QTY	BOTANICAL / COMMON NAME	COND.	SIZE	SPACING
AG	31	Acer saccharum `Green Mountain` TM / Green Mountain Sugar Maple	B & B	2.5" Cal.	As shown
BD	28	Betula nigra `BNMTF` TM / Dura Heat River Birch - Multi-Stem; 3 to 5 Canes	B & B	8` HT.	As shown
CC	24	Carpinus caroliniana / American Hornbeam	B & B	2.5" Cal.	As shown
GA	9	Ginkgo biloba `Autumn Gold` TM / Maidenhair Tree	B & B	2.5" Cal.	As shown
LT	16	Liriodendron tulipifera / Tulip Tree	B & B	2.5" Cal.	As shown
PO	10	Platanus occidentalis / American Sycamore	B & B	2.5" Cal.	As Shown
PE	11	Platanus x acerifolia `Exclamation` TM / Exclamation London Plane Tree	B & B	2.5" Cal.	As shown
QC	25	Quercus coccinea / Scarlet Oak	B & B	2.5" Cal.	As shown
TA	14	Taxodium distichum `Autumn Gold` / Autumn Gold Bald Cypress	B & B	2.5" Cal.	As Shown
TG	18	Tilia cordata `Greenspire` / Greenspire Littleleaf Linden	B & B	2.5" Cal.	As shown
UC	23	Ulmus x `Frontier` / Frontier Hybrid Elm	B & B	2.5" Cal.	As shown



0' 40' 80'
SCALE: 1"=40'

GENERAL NOTES:

1. CONTRACTOR TO VERIFY ALL UTILITY LOCATIONS IN THE FIELD PRIOR TO BEGINNING WORK. CONTRACTOR IS RESPONSIBLE FOR ANY DAMAGE TO UTILITIES ASSOCIATED WITH WORK. UTILITIES SHALL BE REPAIRED TO SATISFACTION OF THE UTILITY OWNER AND/OR OPERATING AUTHORITY AT NO ADDITIONAL COST.
2. A MINIMUM OF 4" OF TOPSOIL (6 TOPSOIL, ½ MULCH AND SOIL CONDITIONER) SHALL BE PLACED ON ALL AREAS TO BE SEEDED, SODDED AND PLANTED. PLANTING SOIL MIX SHALL BE FREE FROM SUBSOIL, VEGETATION, WEEDS OR ANY EXTRANEOUS OR DELETERIOUS MATERIALS LARGER THAN 1". REMOVE ANY UNSUITABLE AND EXCESS TOPSOIL, AS DETERMINED BY SOILS ENGINEER, FROM THE SITE. FURNISH ANY ADDITIONAL TOPSOIL NEEDED AT NO ADDITIONAL COST. ADDED TOPSOIL SHALL BE INCORPORATED INTO EXISTING SOIL.
3. IN CASE OF DISCREPANCIES BETWEEN THE PLAN AND THE PLANT LIST, THE PLAN SHALL DICTATE. IF IN QUESTION, CONTACT THE LANDSCAPE ARCHITECT.
4. ALL PLANTING BEDS SHALL HAVE A 3" THICK LAYER OF SHREDDED HARDWOOD BARK MULCH. NO UTILITY MULCH OR PROCESSED TREE TRIMMINGS WILL BE ALLOWED. ALL PLANTING BEDS SHALL HAVE PRE-EMERGENT HERBICIDE APPLIED AS PER MANUFACTURER'S RECOMMENDATION, AFTER INSTALLATION IS COMPLETE.
5. FINAL PLACEMENT OF PLANT MATERIALS, ETC. SHALL BE APPROVED BY LANDSCAPE ARCHITECT BEFORE PLANTING OPERATIONS ARE TO PROCEED. ALL TREE LOCATIONS SHALL BE MARKED WITH A WOODEN STAKE INDICATING VARIETY AND SIZE OF TREE.
6. NO SUBSTITUTIONS OF PLANT MATERIAL WILL BE ALLOWED. IF PLANTS ARE SHOWN TO BE UNAVAILABLE, THE CONTRACTOR SHALL NOTIFY LANDSCAPE ARCHITECT PRIOR TO BID DATE IN WRITING. ALL PLANTS SHALL BE INSPECTED AND TAGGED WITH PROJECT IDENTIFICATION AT NURSERY OR CONTRACTORS OPERATION PRIOR TO MOVING TO JOB SITE. PLANTS MAY ALSO BE INSPECTED AND APPROVED OR REJECTED ON THE JOB SITE.
7. ALL PLANTS ARE TO MEET OR EXCEED AMERICAN STANDARDS FOR NURSERY STOCK, 2004 EDITION, AS SET FORTH BY AMERICAN ASSOCIATION OF NURSERYMEN.
8. PLANTINGS SHOULD BE INSTALLED BETWEEN APRIL 1ST AND MAY 31ST, OR BETWEEN SEPTEMBER 1ST AND OCTOBER 31ST TO AVOID UNFAVORABLE WEATHER CONDITIONS. LANDSCAPE AND TURF PLANTED OUTSIDE OF THESE PERIODS WILL REQUIRE ADDITIONAL MEASURES TO MAINTAIN ACCEPTABLE HEALTH.
9. PLANTS AND ALL OTHER MATERIALS TO BE STORED ON SITE WILL BE PLACED WHERE THEY WILL NOT CONFLICT WITH CONSTRUCTION AND AS DIRECTED BY OWNER.
10. ALL NEW LANDSCAPE PLANTINGS SHALL BE GUARANTEED FOR A PERIOD OF ONE YEAR FOLLOWING FINAL INSPECTION BY LANDSCAPE ARCHITECT. AT END OF THIS PERIOD, PLANT MATERIAL TERMED DEAD OR UNSATISFACTORY BY LANDSCAPE ARCHITECT SHALL BE REPLACED AT NO ADDITIONAL CHARGE BY THE LANDSCAPE CONTRACTOR.
11. ALL DISTURBED LAWN AREAS SHALL BE SEEDED OR SODDED AS SHOWN PER THE LANDSCAPE AND EROSION CONTROL PLANS.
12. LAWN AND SOD AREAS ARE TO BE GRADED UNIFORMLY WITHOUT ANY UNDULATIONS OR IRREGULARITIES IN THE SURFACE PRIOR TO ANY SEED OR SOD WORK.
13. ALL LAWN IS TO BE A BLEND PER THE PLANT SCHEDULE. SEED AREAS ARE TO HAVE 0% NOXIOUS WEED AND FREE OF DISEASE.
14. PROTECT LAWN SEEDED AREAS WITH STRAW MULCH. SPREAD MULCH UNIFORMLY AT A MINIMUM RATE OF 2 TONS PER ACRE TO FORM A CONTINUOUS BLANKET 1½ INCHES IN LOOSE THICKNESS OVER SEEDED AREAS.

LANDSCAPE LEGEND

- DECIDUOUS SHADE TREE
- EVERGREEN TREE
- SHRUBS AND ORNAMENTAL GRASSES
- MULCH BED/ TREE RING (DOUBLE-SHREDDED HARDWOOD BARK MULCH)
- SPADE EDGE SEE DETAIL 04 ON SHEET C710

ORDINANCE NOTES

STREET TREES:
- (1) TREE REQUIRED PER 35 LF OF FRONTAGE

STATE ROAD 44: (1,243 LF): 35.5 TREES REQUIRED / 36 TREES PROVIDED
FOREST DRIVE, (1,950 LF): 55.7 TREES REQUIRED / 79 TREES PROVIDED

LOT INTERIOR LANDSCAPE:
TREES PROVIDED: 226 TREES

PARKING LOT PERIMETER
MINIMUM 10 BUFFER FROM ALL R.O.W. PLANTINGS REQUIRED FOR MULTI-FAMILY AND COMMERCIAL USES. PERIMETER SHRUBS NOT REQUIRED.

PARKING LOT INTERIOR:
5% OPEN SPACE REQUIRED FOR ALL PAVED SURFACES; ALL ISLANDS ARE TO BE A MINIMUM OF 300 SF; (1) SHADE TREE REQUIRED PER 300 SF.

TOTAL IMPERVIOUS DRIVE AREA: 741,154 SF
REQUIRED OPEN SPACE (5.0%): 37,057 SF / PROVIDED (5.25%): 38,912 SF

GDI CONSTRUCTION
9775 Crosspoint Blvd
Suite 105
Indianapolis, IN 46256
317.567.6100

AMERICAN STRUCTUREPOINT INC.
9025 River Road, Suite 200 | Indianapolis, Indiana 46240
TEL 317.547.5580 | FAX 317.543.0270
www.structurepoint.com

I-65 SOUTH LOGISTICS CENTER LOT 1

81/89 Forest Road
Franklin, Indiana

ARTHUR E. BLEICHER REGISTERED LANDSCAPE ARCHITECT STATE OF INDIANA

CERTIFIED BY

ISSUANCE INDEX
DATE:
12/03/2020
PROJECT PHASE:
CONSTRUCTION DOCUMENTS

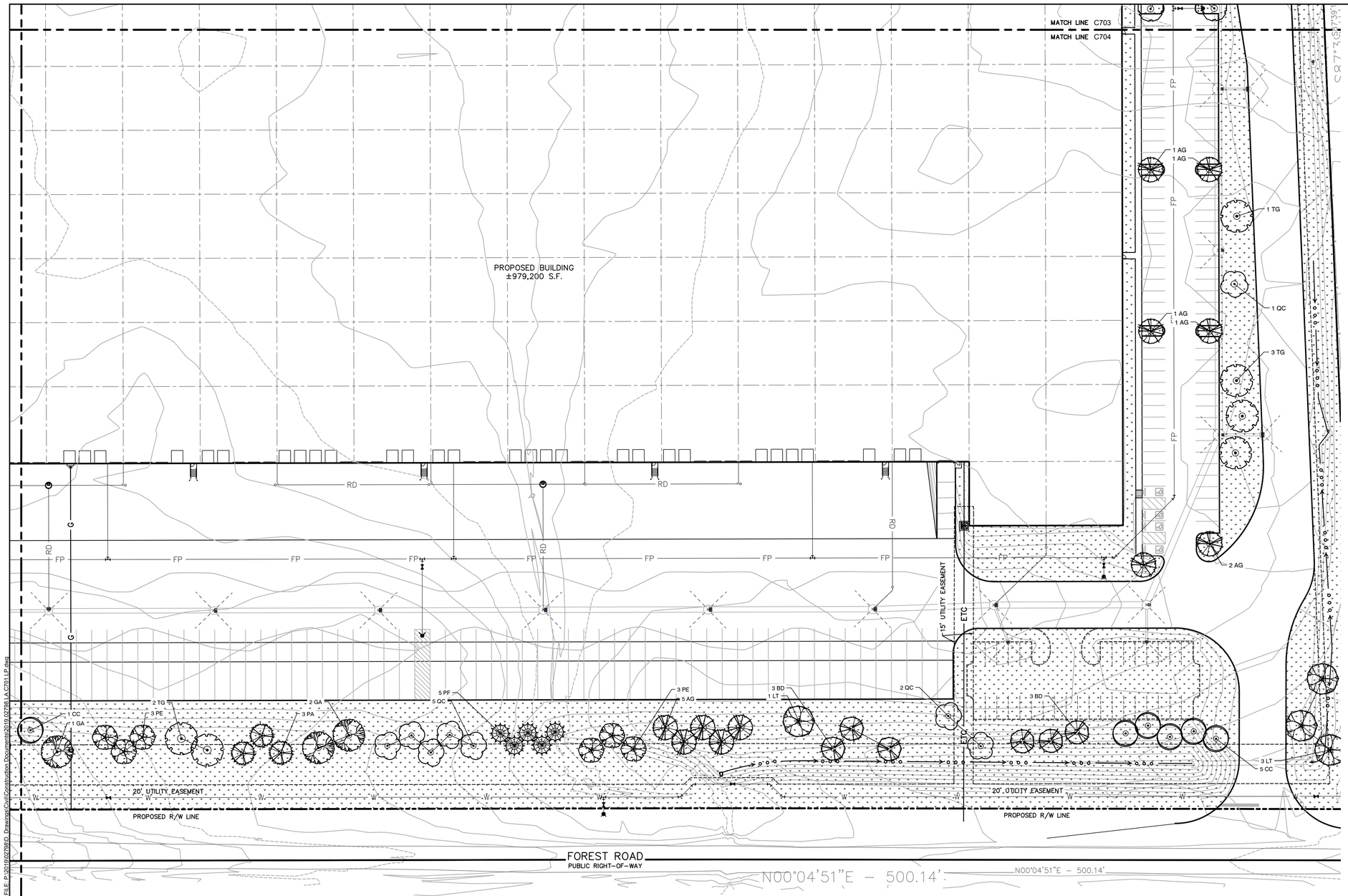
REVISION SCHEDULE		
NO.	DESCRIPTION	DATE

Project Number 2019.02798

LANDSCAPE PLAN

C703

PLOT DATE: 12/1/2020 10:31 AM
PLOT SCALE: 1:2.5849
EDIT DATE: 11/30/2020
EDITED BY: ABLEICHER
DRAWING FILE: P:\2019\02798\D Drawings\Civil\Construction Documents\2019.02798 LA C703 LP.dwg



GENERAL NOTES:

1. CONTRACTOR TO VERIFY ALL UTILITY LOCATIONS IN THE FIELD PRIOR TO BEGINNING WORK. CONTRACTOR IS RESPONSIBLE FOR ANY DAMAGE TO UTILITIES ASSOCIATED WITH WORK. UTILITIES SHALL BE REPAIRED TO SATISFACTION OF THE UTILITY OWNER AND/OR OPERATING AUTHORITY AT NO ADDITIONAL COST.
2. A MINIMUM OF 4" OF TOPSOIL @ TOPSOIL, ½ MULCH AND SOIL CONDITIONER) SHALL BE PLACED ON ALL AREAS TO BE SEEDED, SODDED AND PLANTED. PLANTING SOIL MIX SHALL BE FREE FROM SUBSOIL, VEGETATION, WEEDS OR ANY EXTRANEOUS OR DELETERIOUS MATERIALS LARGER THAN 1". REMOVE ANY UNSUITABLE AND EXCESS TOPSOIL, AS DETERMINED BY SOILS ENGINEER, FROM THE SITE. FURNISH ANY ADDITIONAL TOPSOIL NEEDED AT NO ADDITIONAL COST. ADDED TOPSOIL SHALL BE INCORPORATED INTO EXISTING SOIL.
3. IN CASE OF DISCREPANCIES BETWEEN THE PLAN AND THE PLANT LIST, THE PLAN SHALL DICTATE. IF IN QUESTION, CONTACT THE LANDSCAPE ARCHITECT.
4. ALL PLANTING BEDS SHALL HAVE A 3" THICK LAYER OF SHREDDED HARDWOOD BARK MULCH. NO UTILITY MULCH OR PROCESSED TREE TRIMMINGS WILL BE ALLOWED. ALL PLANTING BEDS SHALL HAVE PRE-EMERGENT HERBICIDE APPLIED AS PER MANUFACTURER'S RECOMMENDATION, AFTER INSTALLATION IS COMPLETE.
5. FINAL PLACEMENT OF PLANT MATERIALS, ETC. SHALL BE APPROVED BY LANDSCAPE ARCHITECT BEFORE PLANTING OPERATIONS ARE TO PROCEED. ALL TREE LOCATIONS SHALL BE MARKED WITH A WOODEN STAKE INDICATING VARIETY AND SIZE OF TREE.
6. NO SUBSTITUTIONS OF PLANT MATERIAL WILL BE ALLOWED. IF PLANTS ARE SHOWN TO BE UNAVAILABLE, THE CONTRACTOR SHALL NOTIFY LANDSCAPE ARCHITECT PRIOR TO BID DATE IN WRITING. ALL PLANTS SHALL BE INSPECTED AND TAGGED WITH PROJECT IDENTIFICATION AT NURSERY OR CONTRACTORS OPERATION PRIOR TO MOVING TO JOB SITE. PLANTS MAY ALSO BE INSPECTED AND APPROVED OR REJECTED ON THE JOB SITE.
7. ALL PLANTS ARE TO MEET OR EXCEED AMERICAN STANDARDS FOR NURSERY STOCK, 2004 EDITION, AS SET FORTH BY AMERICAN ASSOCIATION OF NURSERYMEN.
8. PLANTINGS SHOULD BE INSTALLED BETWEEN APRIL 1ST AND MAY 31ST, OR BETWEEN SEPTEMBER 1ST AND OCTOBER 31ST TO AVOID UNFAVORABLE WEATHER CONDITIONS. LANDSCAPE AND TURF PLANTED OUTSIDE OF THESE PERIODS WILL REQUIRE ADDITIONAL MEASURES TO MAINTAIN ACCEPTABLE HEALTH.
9. PLANTS AND ALL OTHER MATERIALS TO BE STORED ON SITE WILL BE PLACED WHERE THEY WILL NOT CONFLICT WITH CONSTRUCTION AND AS DIRECTED BY OWNER.
10. ALL NEW LANDSCAPE PLANTINGS SHALL BE GUARANTEED FOR A PERIOD OF ONE YEAR FOLLOWING FINAL INSPECTION BY LANDSCAPE ARCHITECT. AT END OF THIS PERIOD, PLANT MATERIAL TERMED DEAD OR UNSATISFACTORY BY LANDSCAPE ARCHITECT SHALL BE REPLACED AT NO ADDITIONAL CHARGE BY THE LANDSCAPE CONTRACTOR.
11. ALL DISTURBED LAWN AREAS SHALL BE SEEDED OR SODDED AS SHOWN PER THE LANDSCAPE AND EROSION CONTROL PLANS.
12. LAWN AND SOD AREAS ARE TO BE GRADED UNIFORMLY WITHOUT ANY UNDULATIONS OR IRREGULARITIES IN THE SURFACE PRIOR TO ANY SEED OR SOD WORK.
13. ALL LAWN IS TO BE A BLEND PER THE PLANT SCHEDULE. SEED AREAS ARE TO HAVE 0% NOXIOUS WEED AND FREE OF DISEASE.
14. PROTECT LAWN SEEDED AREAS WITH STRAW MULCH. SPREAD MULCH UNIFORMLY AT A MINIMUM RATE OF 2 TONS PER ACRE TO FORM A CONTINUOUS BLANKET 1½ INCHES IN LOOSE THICKNESS OVER SEEDED AREAS.

LANDSCAPE LEGEND

- DECIDUOUS SHADE TREE
- EVERGREEN TREE
- SHRUBS AND ORNAMENTAL GRASSES
- MULCH BED/ TREE RING (DOUBLE-SHREDDED HARDWOOD BARK MULCH)
- SPADE EDGE SEE DETAIL 04 ON SHEET C710

ORDINANCE NOTES

STREET TREES:
- (1) TREE REQUIRED PER 35 LF OF FRONTAGE

STATE ROAD 44: (1,243 LF): 35.5 TREES REQUIRED / 36 TREES PROVIDED
FOREST DRIVE, (1,950 LF): 55.7 TREES REQUIRED / 79 TREES PROVIDED

LOT INTERIOR LANDSCAPE:
TREES PROVIDED: 226 TREES

PARKING LOT PERIMETER
MINIMUM 10 BUFFER FROM ALL R.O.W. PLANTINGS REQUIRED FOR MULTI-FAMILY AND COMMERCIAL USES. PERIMETER SHRUBS NOT REQUIRED.

PARKING LOT INTERIOR:
5% OPEN SPACE REQUIRED FOR ALL PAVED SURFACES; ALL ISLANDS ARE TO BE A MINIMUM OF 300 SF; (1) SHADE TREE REQUIRED PER 300 SF.

TOTAL IMPERVIOUS DRIVE AREA: 741,154 SF
REQUIRED OPEN SPACE (5.0%): 37,057 SF / PROVIDED (5.25%): 38,912 SF

CONCEPT PLANT SCHEDULE

LAWN SEED- SUN AND PARTIAL SHADE MIX See general notes for additional lawn seed mixes and installation requirements.		1,022,122 sf
Festuca arundinacea / Turf Type Fescue Hybrid		817,697 sf
Poa pratensis / Kentucky Bluegrass Hybrid		204,424 sf

PLANT SCHEDULE

EVERGREEN TREES	QTY	BOTANICAL / COMMON NAME	COND.	SIZE	SPACING
AC	1	Abies concolor / White Fir	Cont, B&B	6` HT	As shown
PA	6	Picea abies / Norway Spruce	Cont, B&B	6` HT	As shown
PF	10	Pinus flexilis `Vanderwolf`s Pyramid` / Vanderwolf`s Pyramid Pine	Cont, B&B	6` HT	As shown
SHADE TREES	**QTY**	**BOTANICAL / COMMON NAME**	**COND.**	**SIZE**	**SPACING**
AG	31	Acer saccharum `Green Mountain` TM / Green Mountain Sugar Maple	B & B	2.5" Cal.	As shown
BD	28	Betula nigra `BNMTF` TM / Dura Heat River Birch - Multi-Stem; 3 to 5 Canes	B & B	8` HT.	As shown
CC	24	Carpinus caroliniana / American Hornbeam	B & B	2.5" Cal.	As shown
GA	9	Ginkgo biloba `Autumn Gold` TM / Maidenhair Tree	B & B	2.5" Cal.	As shown
LT	16	Liriodendron tulipifera / Tulip Tree	B & B	2.5" Cal.	As shown
PO	10	Platanus occidentalis / American Sycamore	B & B	2.5" Cal.	As Shown
PE	11	Platanus x acerifolia `Exclamation` TM / Exclamation London Plane Tree	B & B	2.5" Cal.	As shown
QC	25	Quercus coccinea / Scarlet Oak	B & B	2.5" Cal.	As shown
TA	14	Taxodium distichum `Autumn Gold` / Autumn Gold Bald Cypress	B & B	2.5" Cal.	As Shown
TG	18	Tilia cordata `Greenspire` / Greenspire Littleleaf Linden	B & B	2.5" Cal.	As shown
UC	23	Ulmus x `Frontier` / Frontier Hybrid Elm	B & B	2.5" Cal.	As shown

GDI CONSTRUCTION
9775 Crosspoint Blvd
Suite 105
Indianapolis, IN 46256
317.567.6100

AMERICAN STRUCTUREPOINT INC.
9025 River Road, Suite 200 | Indianapolis, Indiana 46240
TEL 317.547.5580 | FAX 317.543.0270
www.structurepoint.com

I-65 SOUTH LOGISTICS CENTER LOT 1

81/89 Forest Road
Franklin, Indiana

ARTHUR E. BLEICHER REGISTERED LANDSCAPE ARCHITECT

CERTIFIED BY

ISSUANCE INDEX
DATE:
12/03/2020
PROJECT PHASE:
CONSTRUCTION DOCUMENTS

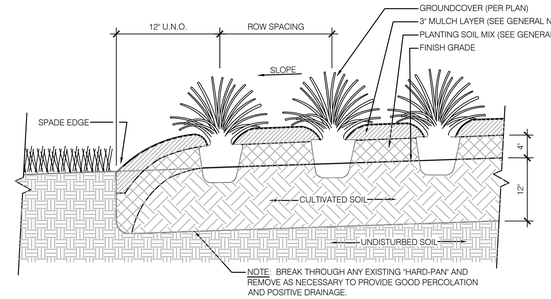
REVISION SCHEDULE		
NO.	DESCRIPTION	DATE

Project Number 2019.02798

LANDSCAPE PLAN

C704

PLOT DATE: 12/1/2020 10:25 AM
PLOT SCALE: 1:2.5849
EDIT DATE: 11/30/2020
EDITED BY: ABLEICHER
DRAWING FILE: P:\2019\02798\D Drawings\Civil\Construction Documents\2019.02798 LA C701 LP.dwg
C701
C704

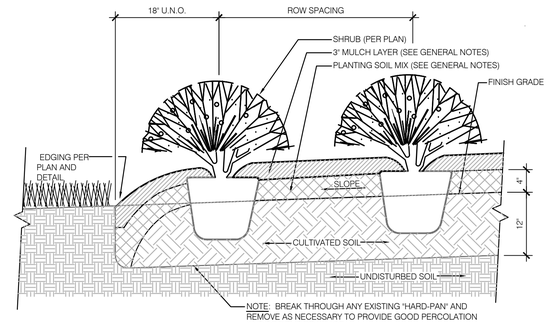


PLANTING PROCEDURE

1. LAYOUT BED AND OUTLINE WITH SPADE EDGE. PLACE SOIL FROM SPADE EDGE WITHIN BED.
2. ROTOTILL BED TO 12" DEPTH. SPREAD 4" MIN. LAYER OF PLANTING SOIL MIX OVER BED. ROTOTILL PLANTING SOIL MIX INTO TOP OF BED.
3. INSTALL PLANTS, MULCH AND WATER THOROUGHLY. DO NOT ALLOW AIR POCKETS TO FORM WHEN BACKFILLING.

03 GROUNDCOVER PLANTING DETAIL

C710

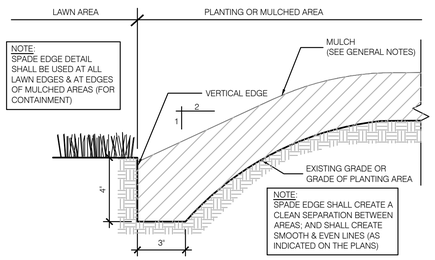


PLANTING PROCEDURE

1. LAYOUT BED AND OUTLINE WITH SPADE EDGE. PLACE SOIL FROM SPADE EDGE WITHIN BED.
2. ROTOTILL BED TO 12" DEPTH. SPREAD 4" MIN. LAYER OF PLANTING SOIL MIX OVER BED. ROTOTILL PLANTING SOIL MIX INTO TOP OF BED.
3. INSTALL PLANTS, MULCH AND WATER THOROUGHLY. DO NOT ALLOW AIR POCKETS TO FORM WHEN BACKFILLING.

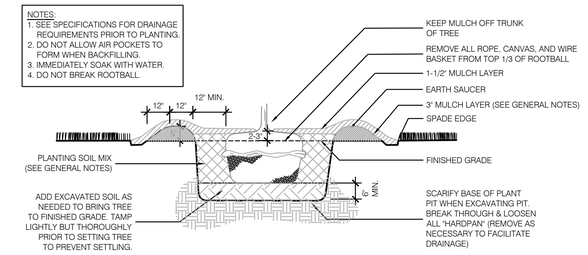
02 SHRUB PLANTING DETAIL

C710



04 SPADE EDGE DETAIL

C710



PLANTING PROCEDURE

1. EXCAVATE ROOTBALL PIT
2. ADD EXCAVATED SOIL & TAMP. SET TREE SUCH THAT TOP OF ROOTBALL IS 2-3" HIGHER THAN FINISHED GRADE.
3. BACKFILL WITH SOIL MIX & "WATER IN"
4. COMPLETE BACKFILLING, CONSTRUCT SAUCER, SPADE EDGE & ADD MULCH
5. STAKE & GUY SECURELY (AS REQUIRED)

01 TREE PLANTING DETAIL

C710

GDI CONSTRUCTION
9775 Crosspoint Blvd
Suite 105
Indianapolis, IN 46256
317.567.6100

AMERICAN STRUCTUREPOINT INC.
9025 River Road, Suite 200 | Indianapolis, Indiana 46240
TEL 317.547.5580 | FAX 317.543.0270
www.structurepoint.com

I-65 SOUTH LOGISTICS CENTER LOT 1

81/89 Forest Road
Franklin, Indiana



CERTIFIED BY

ISSUANCE INDEX
DATE:
12/03/2020
PROJECT PHASE:
CONSTRUCTION DOCUMENTS

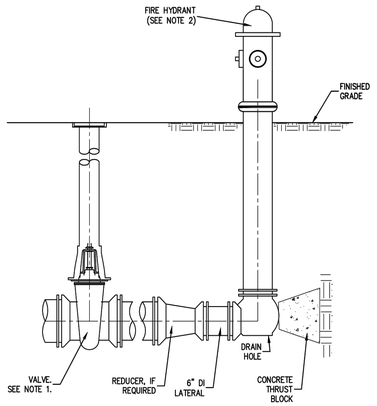
REVISION SCHEDULE		
NO.	DESCRIPTION	DATE

Project Number 2019.02798

LANDSCAPE DETAILS

C710

PLOT DATE: 11/30/2020 2:06 PM
PLOT SCALE: 1:2.5849
EDIT DATE: 11/30/2020
EDITED BY: ANDENS
DRAWING FILE: P:\2019\02798\D Drawings\Civil\Construction Documents\2019.02798 LA C700 LP.dwg



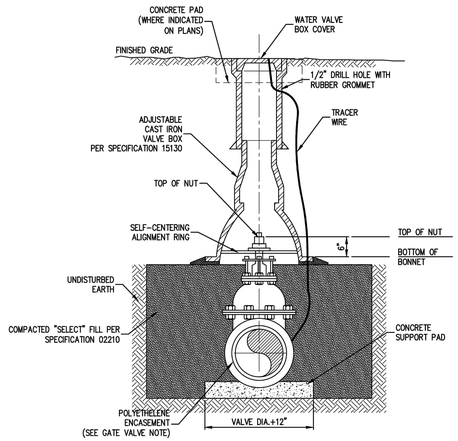
SECTION

NOTE:
1. RESTRAIN VALVE AS A DEAD-END.
2. INSTALL FIRE HYDRANT PER INSTALLATION STANDARD DETAIL. HYDRANT AUXILIARY VALVE NOT REQUIRED.

TEMPORARY DEAD-END FIRE HYDRANT

N.T.S.

INDIANA AMERICAN WATER	STANDARD DETAIL	
ENGINEERING DEPARTMENT 153 N. EMERSON AVENUE GREENWOOD, INDIANA 46143	**TEMPORARY DEAD-END FIRE HYDRANT DETAIL**	
	DATE: JANUARY, 2018	DRAWN BY: S. FORD
	LATEST REV: JULY, 2018	APP'D BY: E.N.

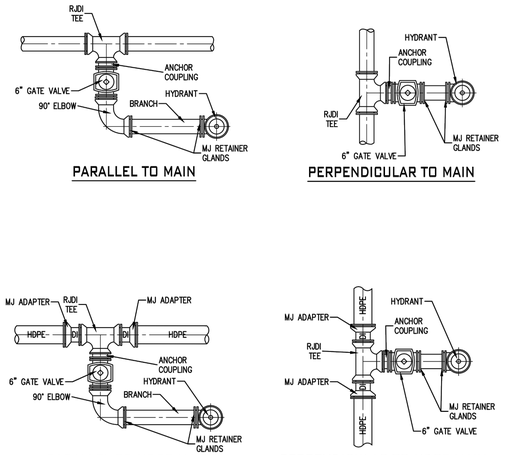


GATE VALVE (12" AND SMALLER)

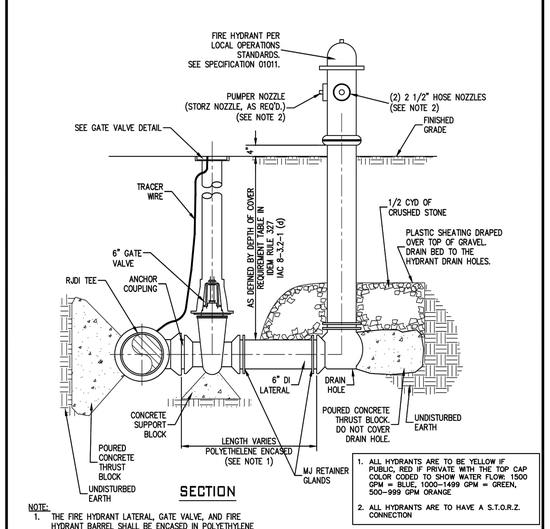
N.T.S.

GATE VALVE NOTE
THE POLYETHELENE ENCASEMENT SHALL BE INSTALLED UP TO THE OPERATING NUT, AND OVER THE LOWER PORTION OF THE VALVE BOX, LEAVING THE OPERATING NUT EXPOSED AND FREE TO BE OPERATED WITHIN THE VALVE BOX.

INDIANA AMERICAN WATER	STANDARD DETAIL	
ENGINEERING DEPARTMENT 153 N. EMERSON AVENUE GREENWOOD, INDIANA 46143	**GATE VALVE (12" AND SMALLER)**	
	DATE: JANUARY, 2018	DRAWN BY: S. FORD
	LATEST REV: JANUARY, 2018	APP'D BY: E.N.



INDIANA AMERICAN WATER	STANDARD DETAIL	
ENGINEERING DEPARTMENT 153 N. EMERSON AVENUE GREENWOOD, INDIANA 46143	**FIRE HYDRANT INSTALLATION DETAILS**	
	DATE: JANUARY, 2018	DRAWN BY: S. FORD
	LATEST REV: JULY, 2018	APP'D BY: E.N.



SECTION

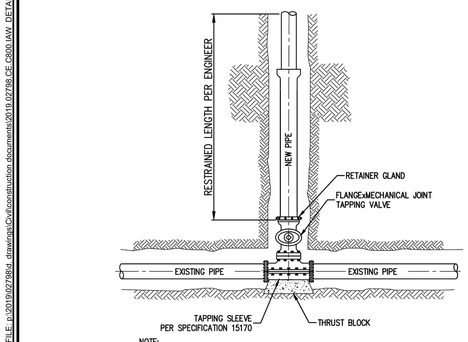
NOTE:
1. THE FIRE HYDRANT LATERAL, GATE VALVE, AND FIRE HYDRANT BARREL SHALL BE ENCASED IN POLYETHYLENE ENCASEMENT UP TO FINISHED GRADE PER SPECIFICATION 15130 PRIOR TO BACKFILL. THE POLYETHYLENE ENCASEMENT SHALL NOT INTERFERE WITH THE DRAIN HOLE.
2. WHEN INSTALLED BEHIND CURB, PUMPER AND HOSE NOZZLES TO BE AT LEAST 18"-24", DEPENDING ON LOCAL REQUIREMENTS, FROM FACE OF CURB.

1. ALL HYDRANTS ARE TO BE YELLOW IF PUBLIC, RED IF PRIVATE WITH THE TOP CAP COLOR CODED TO SHOW WATER FLOW. 1500 GPM = BLUE, 1000-1499 GPM = GREEN, 500-999 GPM ORANGE.
2. ALL HYDRANTS ARE TO HAVE A S.T.O.R.Z. CONNECTION

FIRE HYDRANT DETAILS

N.T.S.

INDIANA AMERICAN WATER	STANDARD DETAIL	
ENGINEERING DEPARTMENT 153 N. EMERSON AVENUE GREENWOOD, INDIANA 46143	**FIRE HYDRANT DETAIL**	
	DATE: JANUARY, 2018	DRAWN BY: S. FORD
	LATEST REV: JULY, 2018	APP'D BY: E.N.

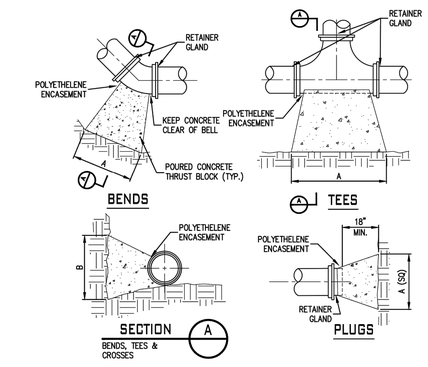


NOTE:
1. RETAINER GLAND PER SPECIFICATION 15130.
2. TAPPING SLEEVE FOR HDPE PIPE MUST BE APPROVED FOR THE APPLICATION BY THE MANUFACTURER AND INAWC.

TAPPING SLEEVE AND TAPPING VALVE DETAIL

N.T.S.

INDIANA AMERICAN WATER	STANDARD DETAIL	
ENGINEERING DEPARTMENT 153 N. EMERSON AVENUE GREENWOOD, INDIANA 46143	**TAPPING SLEEVE AND TAPPING VALVE**	
	DATE: JANUARY, 2018	DRAWN BY: S. FORD
	LATEST REV: JANUARY, 2018	APP'D BY: E.N.

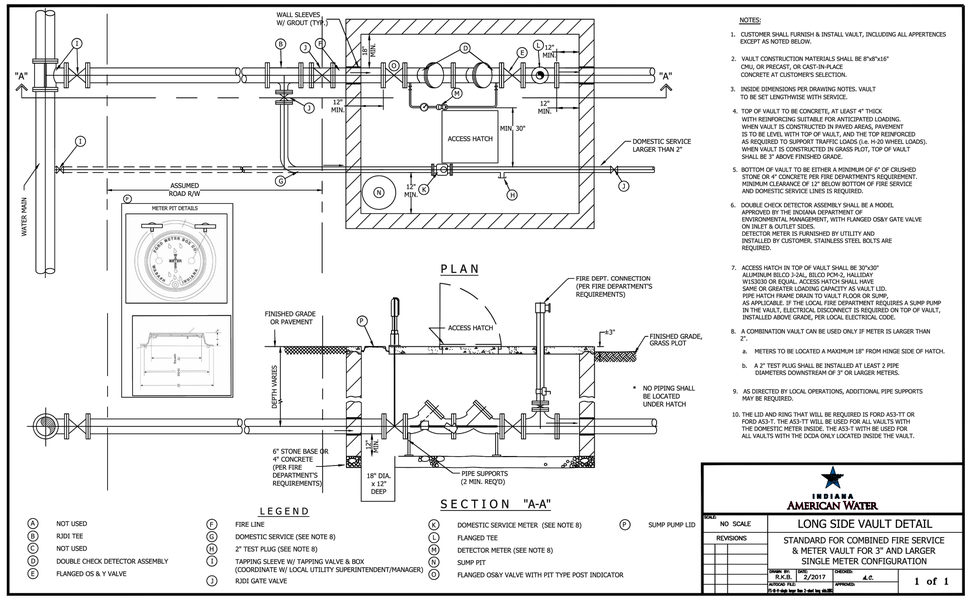


THRUST BLOCK DETAIL

N.T.S.

NOTES:
1. THRUST BLOCK DIMENSIONS SHALL BE PROVIDED BY THE DESIGN ENGINEER.
2. THRUST BLOCKS SHALL BE INSTALLED AGAINST UNDISTURBED SOIL WITH ADEQUATE BEARING TO PREVENT MOVEMENT OF FITTING.
3. NO THRUST BLOCKS TO BE PLACED IN SEWER LATERAL DITCHES.
4. THRUST BLOCKING MUST FIT IN EASEMENT, IN SOME CASES ADDITIONAL RESTRAINT MAY BE REQUIRED.
5. DESIGN TO BE BASED ON 200 PSI HYDROSTATIC WATER PRESSURE (150 PSI STATIC PRESSURE PLUS 50 PSI WATER HAMMER).
6. INSTALL POLYETHYLENE ENCASEMENT ON ALL D.I. PIPE AND FITTINGS PRIOR TO POURING CONCRETE.
7. PIPE JOINTS AND BOLTS MUST BE ACCESSIBLE.
8. ALLOW SUFFICIENT CLEARANCE BETWEEN CONCRETE AND BOLTS FOR FUTURE MAINTENANCE.
9. ALL ANCHOR BOLTS SHALL BE CORROSION RESISTANT, AND SIZED PER SPECIFICATION.
10. THRUST BLOCKING DETAILS ARE SHOWN HERE FOR TYPICAL INSTALLATIONS. IN SOME CASES, ADDITIONAL RESTRAINT MAY BE REQUIRED.
11. CONCRETE USED FOR THRUST BLOCKS SHALL BE MIN 3000 PSI CONCRETE.
12. FOR UNSTABLE SOIL CONDITIONS, THE ENGINEER SHALL VERIFY THRUST BLOCK DIMENSIONS.

INDIANA AMERICAN WATER	STANDARD DETAIL	
ENGINEERING DEPARTMENT 153 N. EMERSON AVENUE GREENWOOD, INDIANA 46143	**THRUST BLOCKS**	
	DATE: JANUARY, 2018	DRAWN BY: S. FORD
	LATEST REV: JANUARY, 2018	APP'D BY: E.N.



NOTES:
1. CUSTOMER SHALL FURNISH & INSTALL VAULT, INCLUDING ALL APPERTENCES EXCEPT AS NOTED BELOW.
2. VAULT CONSTRUCTION MATERIALS SHALL BE 8"x8"x16" CMU, OR PRECAST, OR CAST-IN-PLACE CONCRETE AT CUSTOMER'S SELECTION.
3. INSIDE DIMENSIONS PER DRAWING NOTES. VAULT TO BE SET LENGTHWISE WITH SERVICE.
4. TOP OF VAULT TO BE CONCRETE, AT LEAST 4" THICK WITH REINFORCING SUITABLE FOR ANTICIPATED LOADING. WHEN VAULT IS CONSTRUCTED IN PAVED AREAS, PAVEMENT IS TO BE LEVEL WITH TOP OF VAULT, AND THE TOP REINFORCED AS REQUIRED TO SUPPORT TRAFFIC LOADS (i.e. H-20 WHEEL LOADS). WHEN VAULT IS CONSTRUCTED IN GRASS PLOT, TOP OF VAULT SHALL BE 3" ABOVE FINISHED GRADE.
5. BOTTOM OF VAULT TO BE EITHER A MINIMUM OF 6" OF CRUSHED STONE OR 4" CONCRETE PER FIRE DEPARTMENT'S REQUIREMENT. MINIMUM CLEARANCE OF 12" BELOW BOTTOM OF FIRE SERVICE AND DOMESTIC SERVICE LINES IS REQUIRED.
6. DOUBLE CHECK DETECTOR ASSEMBLY SHALL BE A MODEL APPROVED BY THE INDIANA DEPARTMENT OF ENVIRONMENTAL MANAGEMENT, WITH FLANGED OS&Y GATE VALVE ON INLET & OUTLET SIDES. DETECTOR METER IS FURNISHED BY UTILITY AND INSTALLED BY CUSTOMER. STAINLESS STEEL BOLTS ARE REQUIRED.
7. ACCESS HATCH IN TOP OF VAULT SHALL BE 30"x30" ALUMINUM BILCO (I-JAL, BILCO PCW-2, HALSEY WISE3030 OR EQUAL. ACCESS HATCH SHALL HAVE SAME OR GREATER LOADING CAPACITY AS VAULT LID. FIRE HATCH FRAME DRAIN TO VAULT FLOOR OR SUMP, AS APPLICABLE. IF THE LOCAL FIRE DEPARTMENT REQUIRES A SUMP PUMP IN THE VAULT, ELECTRICAL DISCONNECT IS REQUIRED ON TOP OF VAULT, INSTALLED ABOVE GRADE, PER LOCAL ELECTRICAL CODE.
8. A COMBINATION VAULT CAN BE USED ONLY IF METER IS LARGER THAN 2".
   a. METERS TO BE LOCATED A MAXIMUM 18" FROM HINGE SIDE OF HATCH.
   b. A 2" TEST PLUG SHALL BE INSTALLED AT LEAST 2 PIPE DIAMETERS DOWNSTREAM OF 3" OR LARGER METERS.
9. AS DIRECTED BY LOCAL OPERATIONS, ADDITIONAL PIPE SUPPORTS MAY BE REQUIRED.
10. THE LID AND RING THAT WILL BE REQUIRED IS FORD A53-T1 OR FORD A53-T. THE A53-TT WILL BE USED FOR ALL VAULTS WITH THE DOMESTIC METER INSIDE. THE A53-T WITH BE USED FOR ALL VAULTS WITH THE OCDA ONLY LOCATED INSIDE THE VAULT.

LEGEND

(A) NOT USED
(B) RJDI TEE
(C) NOT USED
(D) DOUBLE CHECK DETECTOR ASSEMBLY
(E) FLANGED OS & Y VALVE
(F) FIRE LINE
(G) DOMESTIC SERVICE (SEE NOTE 8)
(H) 2" TEST PLUG (SEE NOTE 8)
(I) TAPPING SLEEVE W/ TAPPING VALVE & BOX (COORDINATE W/ LOCAL UTILITY SUPERINTENDENT/MANAGER)
(J) RJDI GATE VALVE
(K) DOMESTIC SERVICE METER (SEE NOTE 8)
(L) FLANGED TEE
(M) DETECTOR METER (SEE NOTE 8)
(N) SUMP PIT
(O) FLANGED OS&Y VALVE WITH PIT TYPE POST INDICATOR
(P) SUMP PUMP LID

INDIANA AMERICAN WATER		
SCALE: NO SCALE	LONG SIDE VAULT DETAIL	
REVISIONS	STANDARD FOR COMBINED FIRE SERVICE & METER VAULT FOR 3" AND LARGER SINGLE METER CONFIGURATION	
	DRAWN BY: R.K.B. 2/2017	CHECKED: A.C.
	DESIGN PER:	APPROVED:
	1 of 1	

GDI CONSTRUCTION
9775 Crosspoint Blvd
Suite 105
Indianapolis, IN 46256
317.567.6100

AMERICAN STRUCTUREPOINT INC.
9025 River Road. Suite 200 | Indianapolis, Indiana 46240
TEL 317.547.5580 | FAX 317.543.0270
www.structurepoint.com

I-65 SOUTH LOGISTICS CENTER LOT 1

81/89 Forest Road
Franklin, Indiana

JUSTIN ERIC OLAH
REGISTERED
PROFESSIONAL ENGINEER
STATE OF INDIANA
PE 10009881
NOT VALID WITHOUT ORIGINAL SIGNATURE
AND SEAL
12/3/2020
PROFESSIONAL ENGINEER

CERTIFIED BY

ISSUANCE INDEX
DATE:
12/03/2020
PROJECT PHASE:
CONSTRUCTION DOCUMENTS

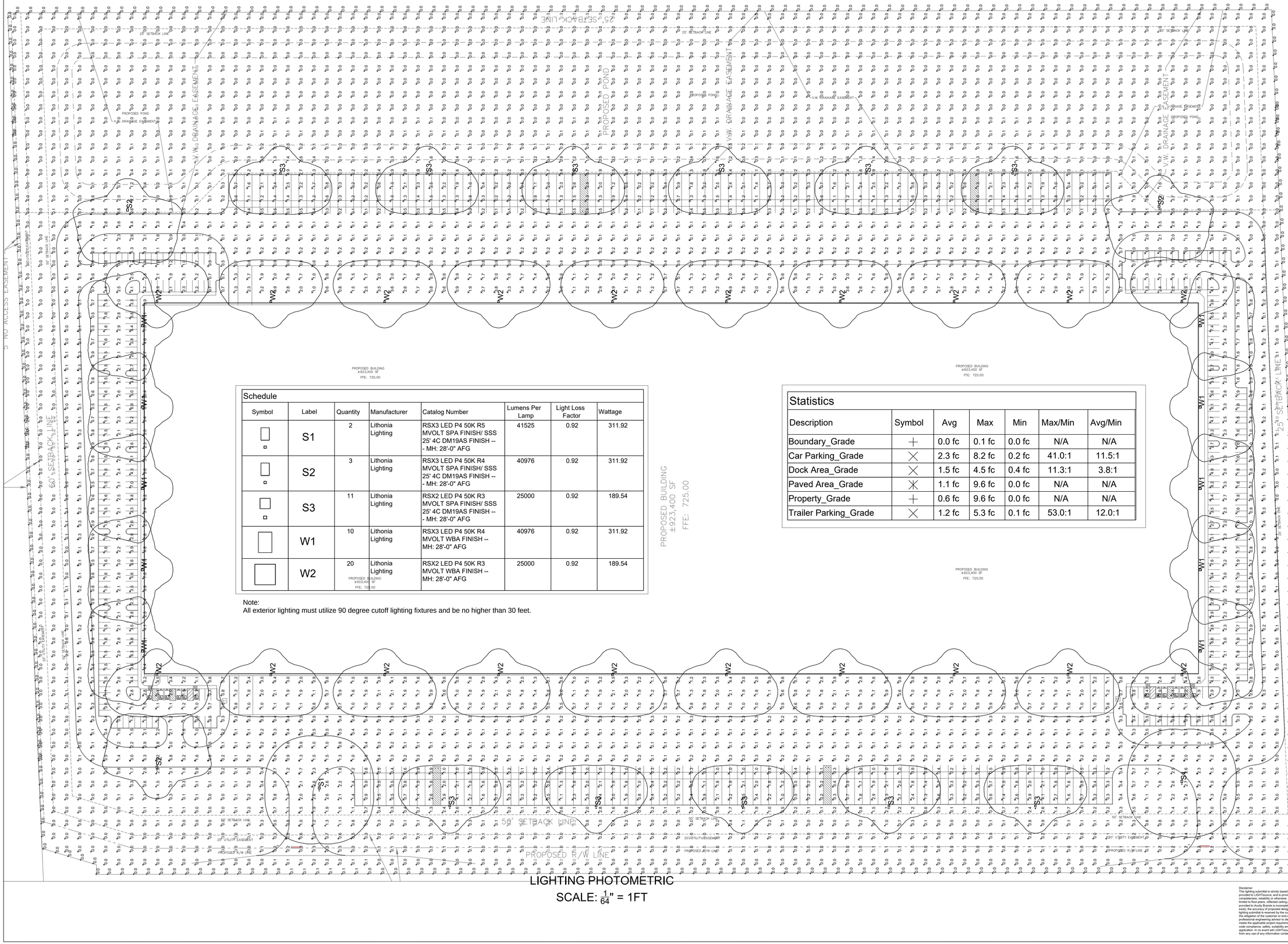
REVISION SCHEDULE		
NO.	DESCRIPTION	DATE

Project Number 2019.02798

INDIANA AMERICAN WATER STANDARD DETAILS

C800

PLOT DATE: 12/3/2020 1:11 PM
PLOT SCALE: 1:2.5849
EDIT DATE: 3/13/2020
EDITED BY: DWALLACE
DRAWING FILE: p:\2019\02798\d_drawings\Civil\construction documents\2019.02798_CE_C800 IAW_DETAILS.dwg



Schedule							
Symbol	Label	Quantity	Manufacturer	Catalog Number	Lumens Per Lamp	Light Loss Factor	Wattage
	S1	2	Lithonia Lighting	RSX3 LED P4 50K R5 MVOLT SPA FINISH/ SSS 25' 4C DM19AS FINISH -- - MH: 28'-0" AFG	41525	0.92	311.92
	S2	3	Lithonia Lighting	RSX3 LED P4 50K R4 MVOLT SPA FINISH/ SSS 25' 4C DM19AS FINISH -- - MH: 28'-0" AFG	40976	0.92	311.92
	S3	11	Lithonia Lighting	RSX2 LED P4 50K R3 MVOLT SPA FINISH/ SSS 25' 4C DM19AS FINISH -- - MH: 28'-0" AFG	25000	0.92	189.54
	W1	10	Lithonia Lighting	RSX3 LED P4 50K R4 MVOLT WBA FINISH -- MH: 28'-0" AFG	40976	0.92	311.92
	W2	20	Lithonia Lighting	RSX2 LED P4 50K R3 MVOLT WBA FINISH -- MH: 28'-0" AFG	25000	0.92	189.54

Note:
All exterior lighting must utilize 90 degree cutoff lighting fixtures and be no higher than 30 feet.

Statistics						
Description	Symbol	Avg	Max	Min	Max/Min	Avg/Min
Boundary_Grade	+	0.0 fc	0.1 fc	0.0 fc	N/A	N/A
Car Parking_Grade	×	2.3 fc	8.2 fc	0.2 fc	41.0:1	11.5:1
Dock Area_Grade	×	1.5 fc	4.5 fc	0.4 fc	11.3:1	3.8:1
Paved Area_Grade	×	1.1 fc	9.6 fc	0.0 fc	N/A	N/A
Property_Grade	+	0.6 fc	9.6 fc	0.0 fc	N/A	N/A
Trailer Parking_Grade	×	1.2 fc	5.3 fc	0.1 fc	53.0:1	12.0:1

LIGHTING PHOTOMETRIC
SCALE: $\frac{1}{64}$" = 1FT

GENERAL NOTES

GENERAL PLAN NOTES:

- MH: 28'-0" A.F.G.
- POINTS CALCULATED AT: GRADE
- LIGHT LOSS FACTOR: AS NOTED

****

FOR PRICING CONTACT
JANINE BURKHART 317-698-4175
****

No.	Revision/Issue	Date

Firm Name and Address

LIGHT|source
THE LIGHTING & CONTROLS EXPERTS

8719 CASTLE PARK DRIVE
INDIANAPOLIS, IN 46256
WWW.LIGHTSOURCEINDIANA.COM
p:317-598-6900

Project Name and Address

FRANKLIN INDUSTRIAL DEVELOPMENT
SITE LIGHTING PHOTOMETRIC

Drawn By: MJC

Scale: $\frac{1}{64}$" = 1'-0"

Date: 2/5/20

Drawing #: **LS-20-5028**

Sheet No.: **E101**

Disclaimer:
Any lighting submittal is strictly based on the information provided to LIGHTsource, and is provided without warranty as to accuracy completeness, reliability or otherwise. If the information (including but not limited to floor plans, reflected ceiling plans, electrical plans and specifications) provided to Acuity Brands is incomplete or not current (i.e., newer versions exist), the accuracy of proposed design may be adversely effected. Once this lighting submittal is received by the customer or end-user (as applicable),it is the responsibility of the customer or end-user (as applicable) to consult with a knowledgeable lighting professional to determine whether the proposed design meets the applicable project requirements for lighting system performance, code compliance, safety, suitability and effectiveness for use in a particular application. In no event will LIGHTsource be responsible for any loss resulting from any use of any information contained in this lighting submittal.

LIGHT|source	Project 20-70104-4 I-65 Logistics Center - Lot 1 Submitted By LIGHT SOURCE	Catalog Number RSX3 LED P4 50K R5 MVOLT SPA DDBXD Notes	Type S1



RSX3 LED
Area Luminaire

Catalog Number

Notes

Type

*See the full list of listed and non-listed options at www.acuitybrands.com/rsx

Introduction

The new RSX LED Area family delivers maximum value by providing significant energy savings, long life and outstanding photometric performance at an affordable price. The RSX3 delivers 25,000 to 41,000 lumens allowing it to replace 400W to 1000W HID luminaires.

The RSX features an integral universal mounting mechanism that allows the luminaire to be mounted on most existing drill hole patterns. This "no-drill" solution provides significant labor savings. An easy-access door on the bottom of mounting arm allows for wiring without opening the electrical compartment. A mast arm adaptor, adjustable integral slipfitter and other mounting configurations are available.

Specifications

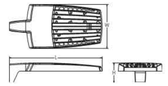
EPA (ft²@0°): 0.70 ft² (0.07 m²)

Length: 33.8" (85.9 cm) (SPA mount)

Width: 16.1" (40.9 cm)

Height: 3.0" (7.6 cm) Main Body, 7.2" (18.3 cm) Arm

Weight (max): 48.0 lbs (21.8 kg)



Ordering Information

EXAMPLE: RSX3 LED P4 40K R3 MVOLT SPA DDBXD

RSX3 LED

Series	Performance Package	Color Temperature	Distribution	Voltage	Mounting
RSX3 LED	P1 P2 P3 P4	30K 3000K 40K 4000K 50K 5000K	R2 Type 2 Wide R3 Type 3 Wide R3S Type 3 Short R4 Type 4 Wide R4S Type 4 Short R5 Type 5 Wide [1] R5S Type 5 Short [1] AFR Automotive Front Row AFRR90 Automotive Front Row Right Rotated AFRL90 Automotive Front Row Left Rotated	MVOLT (120V-277V) [1] HVOLT (347V-480V) [1] (see specific voltage for options as noted) 120 [1] 277 [1] 208 [1] 347 [1] 240 [1] 480 [1]	SPA Square pole mounting (3.0" min. SQ pole for 1 at 90°, 3.5" min. SQ pole for 2, 3, 4 at 90°) RPA Round pole mounting (3.2" min. dia. RND pole for 2, 3, 4 at 90°, 3.9" min. dia. RND pole for 1 at 90°, 2 at 180°, 3 at 120°) MA Mast arm adapter (fits 2-3/8" OD horizontal tenon) IS Adjustable slipfitter (fits 2-3/8" OD tenon) [3] WBA Wall bracket [4] WBASC Wall bracket with surface conduit box AASP Adjustable tilt arm square pole mounting [3] AARP Adjustable tilt arm round pole mounting [3] AAWB Adjustable tilt arm with wall bracket [4] AAWSC Adjustable tilt arm wall bracket and surface conduit box [4]

Options

Shipped Installed

HS	House-side shield [2]
PE	Photocontrol, button style [5,6]
PEX	Photocontrol external threaded, adjustable [6,7]
PER7	Seven-wire twist-lock receptacle only (no controls) [5,8,9,10,11]
CE34	Conduit entry 3/4" NPT (Qty 2)
SF	Single fuse (120, 277, 347) [1]
DF	Double fuse (208, 240, 480) [1]
SPD20KV	20KV Surge pack (10KV standard)
FAO	Field adjustable output [6,12]
DMG	0-10V dimming extend out back of housing for external control (control ordered separate) [6,13]

Shipped Installed

***Standalone and Networked Sensors/Controls (factory default settings, see table page 9)**

NLTAIR2	nLight AIR generation 2 [5,14,15]
PIRHN	Networked, Bi-Level motion/ambient sensor (for use with NLTAIR2) [5,14,15]

***Note: PIRHN with nLight Air can be used as a standalone or networked solution. Sensor coverage pattern is affected when luminaire is tilted.**

Shipped Separately (requires some field assembly)

EGS	External glare shield [6]
EGFV	External glare full visor (360° around light aperture) [6]
BS	Bird spikes [16]

Finish CONFIRM FINISH

DDBXD	Dark Bronze
DBLXD	Black
DNAXD	Natural Aluminum
DWHXD	White
DDBTXD	Textured Dark Bronze
DBLBXD	Textured Black
DNATXD	Textured Natural Aluminum
DWHGXD	Textured White

© 2018-2020 Acuity Brands Lighting, Inc. All rights reserved.

LIGHT|source	Project 20-70104-4 I-65 Logistics Center - Lot 1 Submitted By LIGHT SOURCE	Catalog Number RSX2 LED P4 50K R3 MVOLT WBA DDBXD Notes	Type W2



RSX2 LED
Area Luminaire

Catalog Number

Notes

Type

*See the full list of listed and non-listed options at www.acuitybrands.com/rsx

Introduction

The new RSX LED Area family delivers maximum value by providing significant energy savings, long life and outstanding photometric performance at an affordable price. The RSX2 delivers 11,000 to 31,000 lumens allowing it to replace 250W to 1000W HID luminaires.

The RSX features an integral universal mounting mechanism that allows the luminaire to be mounted on most existing drill hole patterns. This "no-drill" solution provides significant labor savings. An easy-access door on the bottom of mounting arm allows for wiring without opening the electrical compartment. A mast arm adaptor, adjustable integral slipfitter and other mounting configurations are available.

Specifications

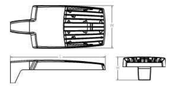
EPA (ft²@0°): 0.69 ft² (0.06 m²)

Length: 29.3" (74.4 cm) (SPA mount)

Width: 13.4" (34.0 cm)

Height: 3.0" (7.6 cm) Main Body, 7.2" (18.3 cm) Arm

Weight (max): 39.0 lbs (17.7 kg)



Ordering Information

EXAMPLE: RSX2 LED P6 40K R3 MVOLT SPA DDBXD

RSX2 LED

Series	Performance Package	Color Temperature	Distribution	Voltage	Mounting
RSX2 LED	P1 P2 P3 P4 P5 P6	30K 3000K 40K 4000K 50K 5000K	R2 Type 2 Wide R3 Type 3 Wide R3S Type 3 Short R4 Type 4 Wide R4S Type 4 Short R5 Type 5 Wide [1] R5S Type 5 Short [1] AFR Automotive Front Row AFRR90 Automotive Front Row Right Rotated AFRL90 Automotive Front Row Left Rotated	MVOLT (120V-277V) HVOLT (347V-480V) [1] (see specific voltage for options as noted) 120 [1] 277 [1] 208 [1] 347 [1] 240 [1] 480 [1]	SPA Square pole mounting (3.0" min. SQ pole for 1 at 90°, 3.5" min. SQ pole for 2, 3, 4 at 90°) RPA Round pole mounting (3.2" min. dia. RND pole for 2, 3, 4 at 90°, 3.9" min. dia. RND pole for 1 at 90°, 2 at 180°, 3 at 120°) MA Mast arm adapter (fits 2-3/8" OD horizontal tenon) IS Adjustable slipfitter (fits 2-3/8" OD tenon) [3] WBA Wall bracket [4] WBASC Wall bracket with surface conduit box AASP Adjustable tilt arm square pole mounting [3] AARP Adjustable tilt arm round pole mounting [3] AAWB Adjustable tilt arm with wall bracket [4] AAWSC Adjustable tilt arm wall bracket and surface conduit box [4]

Options

Shipped Installed

HS	House-side shield [2]
PE	Photocontrol, button style [5,6]
PEX	Photocontrol external threaded, adjustable [6,7]
PER7	Seven-wire twist-lock receptacle only (no controls) [5,8,9,10,11]
CE34	Conduit entry 3/4" NPT (Qty 2)
SF	Single fuse (120, 277, 347) [1]
DF	Double fuse (208, 240, 480) [1]
SPD20KV	20KV Surge pack (10KV standard)
FAO	Field adjustable output [6,12]
DMG	0-10V dimming extend out back of housing for external control (control ordered separate) [6,13]
DS	Dual switching [5,17]

Shipped Installed

***Standalone and Networked Sensors/Controls (factory default settings, see table page 9)**

NLTAIR2	nLight AIR generation 2 [5,14,15]
PIRHN	Networked, Bi-Level motion/ambient sensor (for use with NLTAIR2) [5,14,15]

***Note: PIRHN with nLight Air can be used as a standalone dimming sensor with out-of-box settings or as a wireless networked solution. See factory default settings table. Sensor coverage pattern is affected when luminaire is tilted.**

Shipped Separately (requires some field assembly)

EGS	External glare shield [6]
EGFV	External glare full visor (360° around light aperture) [6]
BS	Bird spikes [16]

Finish CONFIRM FINISH

DDBXD	Dark Bronze
DBLXD	Black
DNAXD	Natural Aluminum
DWHXD	White
DDBTXD	Textured Dark Bronze
DBLBXD	Textured Black
DNATXD	Textured Natural Aluminum
DWHGXD	Textured White

© 2017-2020 Acuity Brands Lighting, Inc. All rights reserved.

Disclaimer
This lighting submittal is strictly based on the information provided to LIGHTsource, and is provided without warranty as to accuracy, completeness, reliability or otherwise. If the information (including but not limited to floor plans, reflected ceiling plans, electrical plans and specifications) provided to Acuity Brands is incomplete or not current (i.e., newer versions exist), the accuracy of proposed design may be adversely affected. Once this lighting submittal is approved, it is the responsibility of the customer and it is the obligation of the customer or end-user (as applicable) to consult with a professional engineering advisor to determine whether the proposed design meets the applicable project requirements for lighting system performance, code compliance, safety, suitability and effectiveness for use in a particular application. In no event will LIGHTsource be responsible for any loss resulting from any use of any information contained in this lighting submittal.

GENERAL NOTES

GENERAL PLAN NOTES:

- MH: 28'-0" A.F.G.
- POINTS CALCULATED AT: GRADE
- LIGHT LOSS FACTOR: AS NOTED

****

FOR PRICING CONTACT
JANINE BURKHART 317-698-4175
****

No.	Revision/Issue	Date

Firm Name and Address

LIGHT|source THE LIGHTING & CONTROLS EXPERTS

8719 CASTLE PARK DRIVE
INDIANAPOLIS, IN 46256
WWW.LIGHTSOURCEINDIANA.COM
p:317-598-6900

Project Name and Address

FRANKLIN INDUSTRIAL DEVELOPMENT

SITE LIGHTING PHOTOMETRIC

Drawn By	MJC
Scale	1/64" = 1'-0"
Date	2/5/20
Drawing #	LS-20-5028
Sheet No.	E102