CITY OF FRANKLIN

DEPARTMENT OF PLANNING & ECONOMIC DEVELOPMENT › DEPARTMENT OF ENGINEERING
70 E. MONROE STREET › FRANKLIN, INDIANA 46131 › 877.736.3631 › FAX 317.736.5310 › www.franklin-in.gov/planning

APPLICATION FOR SITE DEVELOPMENT PLAN REVIEW

DEPARTMENT USE ONLY

Case No:

TRC Date:

Reviewed By:

Date:

SUBJECT PROPERTY INFORMATION

Lincoln Court
Common Address*

N/A - Within Right of Way
Zoning Classification

0.11 acres
Area (in acres)

N/A
Proposed Use

*Attach Recorded Legal Description of the Subject Property

APPLICANT:

Email: jacquelyne.sanders@amwater.com

Indiana-American Water
Name

317-807-2462
Phone Number

555 E County Line Rd. Ste 201 | Greenwood | Indiana, 46143
Mailing Address | City | State | Zip

AGENT OR REPRESENTATIVE:

Email: jacquelyne.sanders@amwater.com

Jacquelyne Sanders
Name

317-807-2462
Phone Number

555 E County Line Rd. Ste 201 | Greenwood | Indiana, 46143
Mailing Address | City | State | Zip

PROPERTY OWNER:

Email: _____

City of Franklin Right of Way
Name

_____
Phone Number

_____
Mailing Address | City | State | Zip

The above information and attached exhibits, to the best of my knowledge and belief, are true and correct.

_____
Applicant's Name (printed)

_____
Applicant's Signature

State of_____

County of_____

SS:

Subscribed and sworn to me this _____day of _____, 20_____

My Commission expires:_____

_____
Notary Public

CITY OF FRANKLIN – SITE DEVELOPMENT PLAN REVIEW

Certificate of Sufficiency of Plan

To be submitted with drainage calculations

PREMISES AFFECTED-COMMON ADDRESS (ATTACH LEGAL DESCRIPTION)

DATE OF PLAN COMPLETION: N/A - We will be placing are main under existing sidewalk and road and replacing to as good or better condition. We will not be affecting the drainage

With the Submission of my Professional Seal: I hereby certify that to the best of my knowledge and belief:

1. The drainage plan for this project is in compliance with all of the drainage requirements set forth in the Franklin City Subdivision Control and Zoning Ordinances.

2. The calculations, designs, reproducible drawings, masters, and original ideas reproduced in this drainage plan are under my domain and control and they were prepared by me and/or my employees.

Name (Printed)

Signature

Date

Business Address

City

State

Zip

☐ Surveyor: Indiana Registration No.

☐ Engineer: Indiana Registration No.

☐ Architect: Indiana Registration No.

CITY OF FRANKLIN – SITE DEVELOPMENT PLAN REVIEW

Affidavit & Consent of Property Owner

I (WE) Project will be completed within the City of Franklin Right of Way.

after being duly sworn, depose and say:

1. That I (we) are the owner(s) of real estate located at:

Common Address	City	State	Zip

2. That I (we) have read and examined the Application for Site Development Plan Review and are familiar with its contents.

3. That I (we) have no objections to, and consent to such request as set forth in the application.

4. That such being made by the applicant is (is not) a condition to the sale or lease of the above referenced property.

Owner's Name (Please Print)

Owner's Signature

State of _____

SS:

County of _____

Subscribed and sworn to me this _____ day of _____, 20 _____

My Commission expires: _____

Notary Public

CITY OF FRANKLIN – SITE DEVELOPMENT PLAN REVIEW

Industrial Performance Affidavit

I (WE) N/A _____

after being duly sworn, depose and say:

1. That I (we) are the operations of an industrially classified use, on the real estate located at:

_____	_____	_____	_____
Common Address	City	State	Zip

2. The business that is/will be operated on the above referenced real estate will comply fully with the City of Franklin Zoning Setion7.5, exempting there from:
   1) Construction and maintenance activity;
   2) Motor vehicles; and
   3) Public safety alerts as described in the Franklin City Zoning Ordinance, Article 7.5(B)

3. The business that is/will be operated on the above referenced real estate will conform with any and all applicable requirements of the State of Indiana and Federal Governments (including the standards of the Occupational Safety and Healthier Administration-OSHA).

   3. That no use will exhibit obnoxious characteristics to the extent that it constitutes a public nuisance defined by and subject to the City of Franklin, Indiana Municipal Code.

_____
Owner's Name (Please Print)

_____
Owner's Signature

State of _____

SS:

County of _____

Subscribed and sworn to me this _____ day of _____, 20 _____

My Commission expires: _____

_____
Notary Public

REQUEST TO WAIVE REQUIREMENTS OF THE CITY OF FRANKLIN SUBDIVISION CONTROL ORDINANCE

PETITIONER INFORMATION

Case Number: PC 20_____ - _____

Property Address: N/A _____

Subdivision/Project Name: _____

Petitioner's Name(s): _____

Address: _____ City: _____

State: _____ Zip: _____ Phone: _____ Fax: _____

Article of Subdivision Control Ordinance: _____

Title of the Article: _____

Reasons: _____

_____

_____

_____

_____ _____

Signature of Petitioner Date

OFFICE USE ONLY

This Request for a waiver of Article _____ of the City of Franklin Subdivision Control Ordinance has been . . .

❑ ***Approved*** ❑ ***Approved w/ conditions*** ❑ ***Denied***

…by the City of Franklin Plan Commission on the _____ day of _____, 20 ____.

_____ _____

Signature of Plan Commission President Date

INDIANA-AMERICAN WATER
JOHNSON COUNTY OPERATIONS
LINCOLN COURT-WASHINGTON ST. TO DEAD END
WATER MAIN REPLACEMENT
FRANKLIN, INDIANA

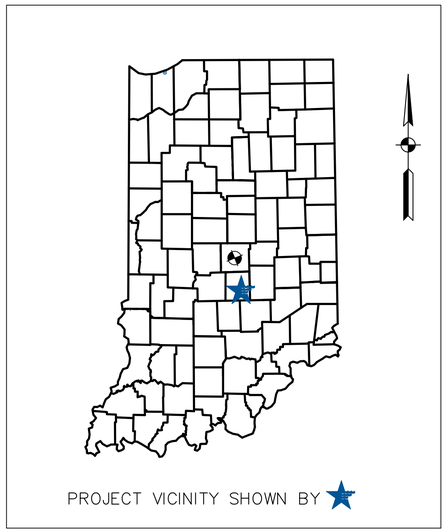

VICINITY MAP
N.T.S.

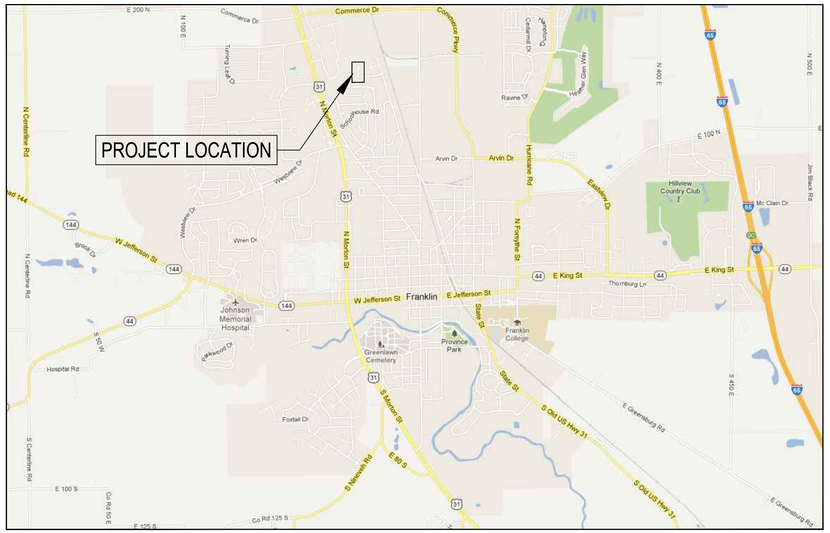

LOCATION MAP
N.T.S.

PLAN INDEX	
SHEET #	SUBJECT
1	TITLE SHEET
2	PLAN & PROFILE – LINCOLN COURT
3	STANDARD DETAILS

INDIANA Know what's below. Call before you dig 811

MICHAEL WAYNE SEALS REGISTERED No. 19300365 STATE OF INDIANA PROFESSIONAL ENGINEER

CERTIFIED BY:

Michael W. Seals — MAY 13, 2013
DATE

MICHAEL W. SEALS
REGISTERED ENGINEER NO. 19300365
STATE OF INDIANA

DISTRICT OFFICE
JOHNSON COUNTY OPERATIONS
110 SOUTH PARK BOULEVARD
GREENWOOD, INDIANA 46143
PHONE: (317) 881-0270
OPERATIONS SUPERINTENDENT: ?
?@amwater.com

INDIANA AMERICAN WATER
555 E. COUNTY LINE RD. STE 201
GREENWOOD, IN 46143
PHONE: (317) 807-2462
CONTACT: JACQUELYNE SANDERS
Jacquelyne.Sanders@amwater.com

DISTRICT OFFICE: JOHNSON COUNTY OPERATIONS

PROJECT: LINCOLN COURT WASHINGTON ST. TO DEAD END WATER MAIN REPLACEMENT

WBS R10-01B1.12-P-0021

REV. #	DATE	REVISIONS
7		
6		
5		
4		
3		
2		
1		

MICHAEL WAYNE SEALS REGISTERED No. 19300365 STATE OF INDIANA PROFESSIONAL ENGINEER

INDIANA AMERICAN WATER
ENGINEERING DEPARTMENT
555 E. COUNTY LINE ROAD
GREENWOOD, INDIANA 46143

EXISTING CONDITIONS: PREPARED BY VS ENGINEERING, INC.
DATE: 01/31/13
DRAWN BY: SHD

SHEET TITLE: TITLE SHEET
DATE: FEBRUARY, 2013
DESIGNED BY: J. SANDERS
DRAWN BY: S. FORD
SCALES: N/A
SHEET 1 OF 3

EXISTING LEGEND

- MONUMENT
- CLEAN OUT
- GAS VALVE
- FIRE HYDRANT
- UTILITY POLE W/LIGHT
- WATER METER
- WATER VALVE
- SIGN
- SANITARY MANHOLE
- CURB INLET MANHOLE
- DECIDUOUS TREE w/TRUNK SIZE
- CONIFEROUS TREE w/TRUNK SIZE
- PARCEL LINE
- RIGHT-OF-WAY
- TELEPHONE LINE
- WATER LINE
- GAS LINE
- SANITARY SEWER
- STORM SEWER
- OVERHEAD UTILITIES
- FLOWLINE
- FENCE LINE
- INDEX CONTOUR
- INTER. CONTOUR
- EXISTING PAVEMENT
- EXISTING CURB
- TREELINE
- ASPHALT
- GRAVEL
- CONCRETE
- CONCRETE WITH ASPHALT OVERLAY

PROPOSED LEGEND

- 4" WATER MAIN
- 2" WATER MAIN
- WATER SERVICE LINE
- BEND (ANGLE NOTED)
- TEE/TAPPING SADDLE
- VALVE
- CUT & CAP
- REDUCER
- THRUST BLOCK
- S1 — 3/4" LONG SIDE SERVICE TAP AND CONNECTION TO EXISTING METER. SEE CONTRACTOR NOTE #3 (RIGHT).
- S2 — 3/4" SHORT SIDE SERVICE TAP AND CONNECTION TO EXISTING METER. SEE CONTRACTOR NOTE #3 (RIGHT).
- SSR — SANITARY SEWER REPLACEMENT (SEE DETAIL – SHEET 3)
- DRIVEWAY RESTORATION PER INAWC STANDARDS & SPECIFICATIONS
- B — SIDEWALK RESTORATION PER CITY OF FRANKLIN STANDARDS & SPECIFICATIONS
- C — HANDICAP RAMP REPLACEMENT PER CITY OF FRANKLIN STANDARDS & SPECIFICATIONS
- F — CONCRETE DRIVE RESTORATION PER CITY OF FRANKLIN STANDARDS & SPECIFICATIONS

GENERAL NOTES

1. COMPARE ALL POINTS IN FIELD PRIOR TO ANY CONSTRUCTION AND REPORT ANY DISCREPANCIES TO SURVEYOR AT ONCE.
2. DO NOT SCALE DIMENSIONS FROM THIS PLAT.
3. CALL INDIANA UNDERGROUND PLAT PROTECTION AT 1–800–382–5544 FOR FIELD LOCATION OF ALL UNDERGROUND UTILITIES PRIOR TO ANY DIGGING OR CONSTRUCTION.
4. UNDERGROUND UTILITY LINES SHOWN HEREON ARE BASED ON FIELD LOCATED EVIDENCE, AND AVAILABLE MAPS.
5. BOUNDARY INFORMATION SHOWN HEREON, IF ANY EXISTS, IS FOR GRAPHICAL DEPICTION ONLY.

CONTRACTOR NOTES

1. UTILITIES SHOWN PER SURVEY PROVIDED BY VS ENGINEERING, INC. (SEE GENERAL NOTES 3 & 4 AT LEFT). CONTRACTOR SHALL FIELD VERIFY ALL UTILITIES VIA VACUUM EXCAVATION/POTHOLING PRIOR TO ANY CONSTRUCTION.
2. CONTRACTOR TO FIELD VERIFY LOCATION OF ALL SANITARY OR STORM SEWER LATERALS PRIOR TO CONSTRUCTION.
3. CONTRACTOR SHALL FIELD VERIFY LOCATION AND SIZE OF ALL WATER SERVICES. ALL AFFECTED FACILITIES MUST BE CONNECTED TO THE PROPOSED 8" WATER MAIN.
4. CONTRACTOR TO INSTALL NEW METER PIT AND WATER METERS WITH ALL ¾" OR 1" DOMESTIC SERVICE CONNECTIONS. INSTALL DUAL METER PITS AT PROPERTY LINES WHERE REQUIRED.
5. CONTRACTOR RESPONSIBLE FOR STAKING RIGHT–OF–WAY BY REGISTERED LAND SURVEYOR.
6. CONTRACTOR IS RESPONSIBLE FOR RED LINE DRAWINGS.

ASSUMED MERIDIAN

0' 20' 40'

SCALE: 1"=20'

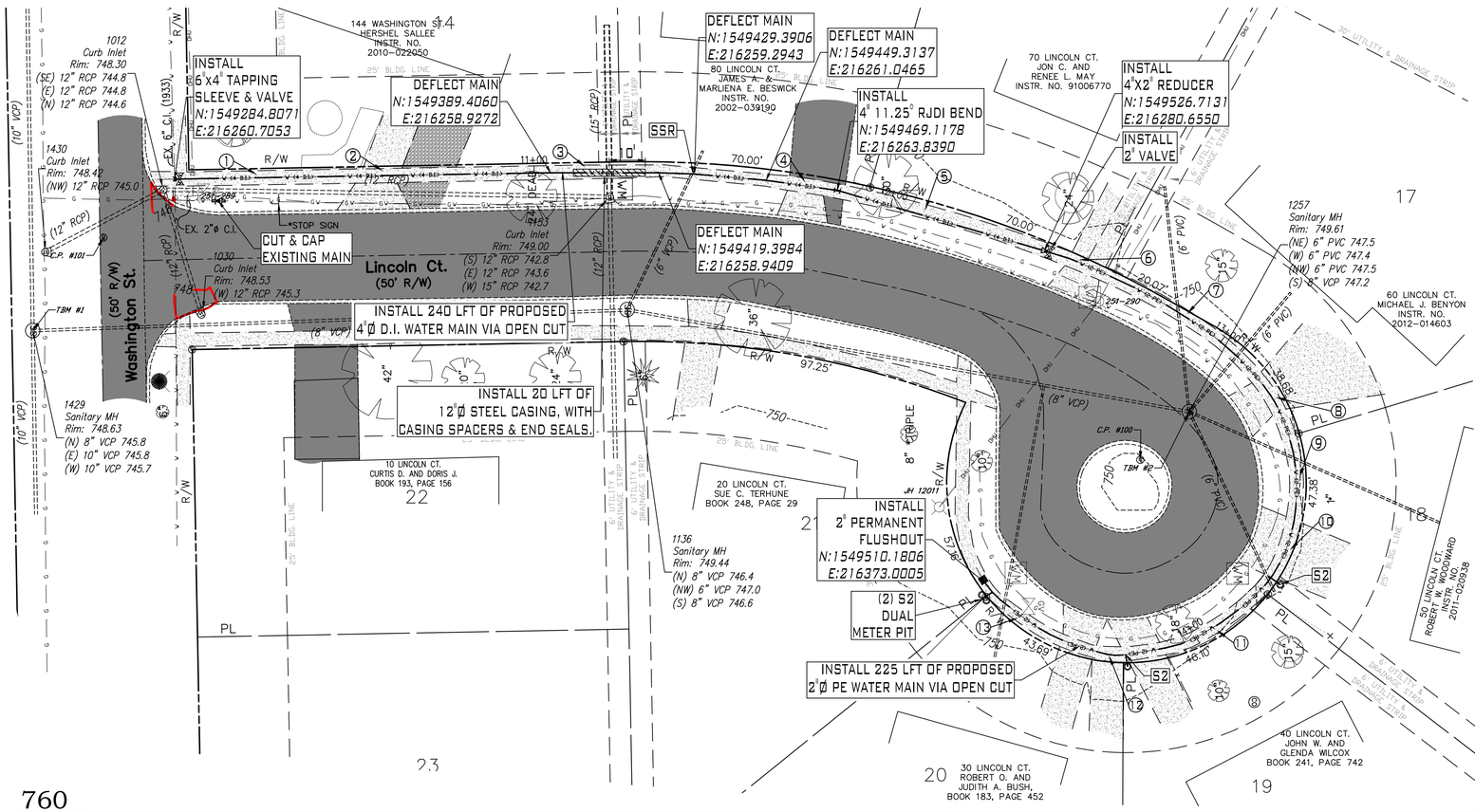

BENCHMARK INFO

CONTROL INFORMATION:
THE HORIZONTAL AND VERTICAL DATUM HEREON ARE BASED UPON THE NAD83 (CORS96) REFERENCE SYSTEM (EPOCH 2002) AND THE NORTH AMERICAN VERTICAL DATUM OF 1988
(NAVD 88), RESPECTIVELY, BY UTILIZING INDOT CONTINUOUSLY OPERATING REFERENCE STATIONS (InCORS) NETWORK. THE ORIGINATING BENCHMARK FOR THE SITE WAS DERIVED FROM THE NEAREST InCORS STATION, INMT, IS WITHIN 20 MILES OF THE PROJECT SITE.

TBM #1
Sanitary Manhole (1429) at the southeast quadrant of the intersection of Lincoln Court and Washington Street
Elev. = 748.63

TBM #2
Sanitary Manhole (1257) at the northwest quadrant of the Lincoln Court cul–de–sac
Elev. = 749.61

CONTROL POINT INFO

POINT #	NORTHING	EASTING	ELEV.	DESCRIPTION
100	1,549,553.3920	216,338.7968	750.16	REBAR SET - RED "VSE" CAP (SURVEY CONTROL POINT)
101	1,549,265.0070	216,276.9717	748.39	MAG NAIL SET

TRENCH REPAIR

1. 49 LFT OF CONCRETE SIDEWALK REPLACEMENT
2. 25 LFT OF CONCRETE DRIVEWAY REPLACEMENT
3. 94 LFT OF CONCRETE SIDEWALK REPLACEMENT
4. 16 LFT OF CONCRETE DRIVEWAY REPLACEMENT
5. 64 LFT OF CONCRETE SIDEWALK REPLACEMENT
6. 11 LFT OF CONCRETE DRIVEWAY REPLACEMENT
7. 52 LFT OF CONCRETE SIDEWALK REPLACEMENT
8. 11 LFT OF CONCRETE DRIVEWAY REPLACEMENT
9. 30 LFT OF CONCRETE SIDEWALK REPLACEMENT
10. 18 LFT OF CONCRETE DRIVEWAY REPLACEMENT
11. 37 LFT OF CONCRETE SIDEWALK REPLACEMENT
12. 28 LFT OF CONCRETE DRIVEWAY REPLACEMENT
13. 30 LFT OF CONCRETE SIDEWALK REPLACEMENT

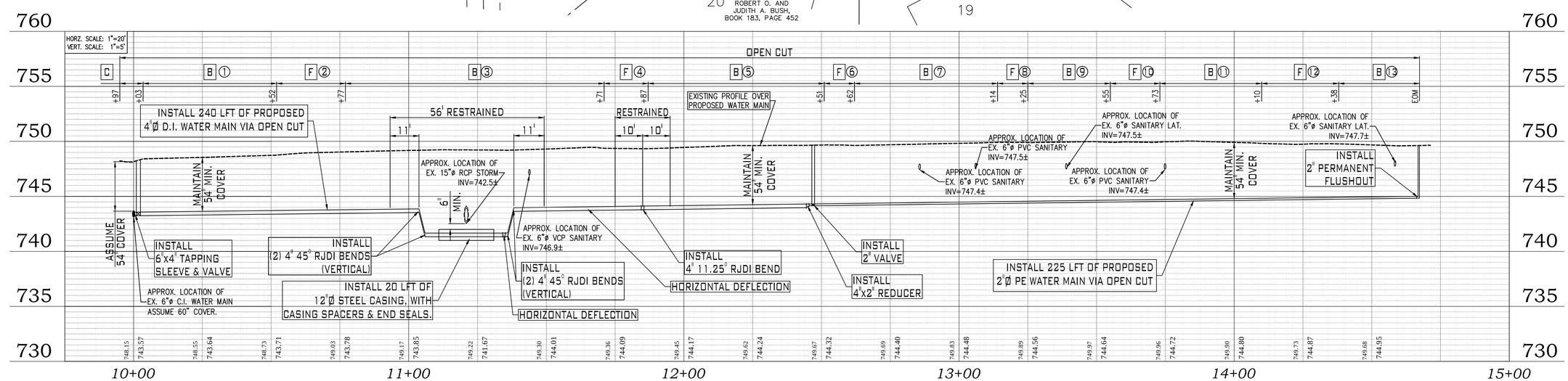

DISTRICT OFFICE: JOHNSON COUNTY OPERATIONS

PROJECT: LINCOLN COURT WASHINGTON ST. TO DEAD END WATER MAIN REPLACEMENT

WBS R10-01B1.12-P-0021

REV. #	DATE	REVISIONS
7		
6		
5		
4		
3		
2		
1		

MICHAEL WAYNE SEALS REGISTERED No. 19300365 STATE OF INDIANA PROFESSIONAL ENGINEER

INDIANA AMERICAN WATER
ENGINEERING DEPARTMENT
555 E. COUNTY LINE ROAD
GREENWOOD, INDIANA 46143

EXISTING CONDITIONS: PREPARED BY VS ENGINEERING, INC.
DRAWN BY: SHD DATE: 01/31/13

SHEET TITLE: PLAN & PROFILE

DATE:	MARCH, 2013
DESIGNED BY:	J. SANDERS
DRAWN BY:	S. FORD
SCALES:	N/A
SHEET	2 OF 3

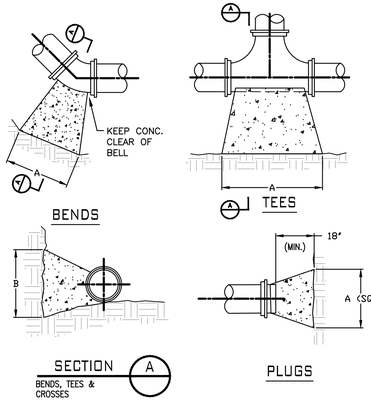

NOTES:

1. COVER OVER TOP OF PIPE SHALL BE BELOW FROST LINE OR 30" MINIMUM, 72" MAXIMUM ACCORDING TO REGULATORY REQUIREMENTS. IF GRADING PLANS RECEIVED BY THE ENGINEER/OWNER WITH THE REQUEST FOR WATER MAIN LAYOUT, INDICATE ADJUSTMENTS TO EXISTING GRADE, THEN PIPE SHALL BE INSTALLED TO MEET MINIMUM AND MAXIMUM COVER FROM PROPOSED GRADES SHOWN ON SAID PLANS.
2. THRUST BLOCKS SHALL BE BUILT AGAINST UNDISTURBED SOIL WITH ADEQUATE BACKING TO PREVENT MOVEMENT OF FITTING.
3. NO THRUST BLOCKS TO BE PLACED IN SEWER LATERAL DITCHES.
4. THRUST BLOCKING MUST FIT IN EASEMENT, IN SOME CASES ADDITIONAL RESTRAINT MAY BE REQUIRED.
5. BASED ON 200 PSI (150 PSI STATIC PRESSURE PLUS 50 PSI WATER HAMMER) AND 2000 PSF SOIL BEARING.
6. POLYETHYLENE ENCASEMENT ON ALL D.I. PIPE AND FITTINGS.
7. PIPE JOINTS AND BOLTS MUST BE ACCESSIBLE.
8. ALLOW SUFFICIENT CLEARANCE BETWEEN CONCRETE AND BOLTS FOR FUTURE MAINTENANCE.
9. ALL ANCHOR BOLTS SHALL BE COR-BLUE, MINIMUM 1/2" DIAMETER. COAT EXPOSED ROD WITH ASPHALT CEMENT AFTER CONCRETE HAS SET.
10. ALL M.J. AND FLG. FITTINGS TO RECEIVE THRUST BLOCKS SHALL HAVE THE FASTENER AREAS FELT WRAPPED AND TAPED PRIOR TO THE CONCRETE POUR TO ALLOW FUTURE ACCESS TO THE FASTENERS AT THE JOINTS.
11. THRUST BLOCKING DETAILS ARE SHOWN HERE FOR TYPICAL INSTALLATIONS. IN SOME CASES, ADDITIONAL RESTRAINT MAY BE REQUIRED.
12. PORTLAND CEMENT CONCRETE USED FOR THRUST BLOCKS SHALL BE MIN 3000 PSI CONCRETE.
13. FOR UNSTABLE SOIL CONDITIONS, CHECK WITH ENGINEER FOR THRUST BLOCK DIMENSIONS.
14. FOR MAIN SIZES GREATER THAN 16", SEE ENGINEER FOR THRUST BLOCK DIMENSIONS.

REQUIRED BEARING AREA ON UNDISTURBED SOIL AND TYPICAL DIMENSIONS

PIPE SIZE	90 DEGREE BENDS			45 DEGREE BENDS			11.25 DEGREE BENDS			22.5 DEGREE BENDS			TEES/PLUGS		
	AREA (sq ft)	"A"	"B"	AREA (sq ft)	"A"	"B"	AREA (sq ft)	"A"	"B"	AREA (sq ft)	"A"	"B"	AREA (sq ft)	"A"	"B"
6	5.3	43"	18"	2.9	23"	18"	0.7	6"	18"	1.5	12"	18"	3.7	30"	18"
8	9.2	55"	24"	5.0	30"	24"	1.3	8"	24"	2.5	15"	24"	6.4	39"	24"
10	13.8	66"	30"	7.5	36"	30"	1.9	9"	30"	3.8	18"	30"	9.7	46"	30"
12	19.4	78"	36"	10.6	42"	36"	2.7	11"	36"	5.3	21"	36"	13.8	55"	36"
14	26.0	89"	42"	14.0	48"	42"	3.6	12"	42"	7.2	25"	42"	18.5	63"	42"
16	33.7	101"	48"	18.3	55"	48"	4.7	14"	48"	9.4	28"	48"	23.9	72"	48"

Area in square feet "A" and "B" in inches
Bearing table area is based on 200 psi maximum with soil bearing capacity of 2000 lbs/square foot.
For higher water pressures or lower soil pressures, consult Engineer for adjustments.
Bearing table area does not include a safety factor.
A safety factor and additional bearing area may be required as directed by the Engineer.

THRUST BLOCKING

NO SCALE

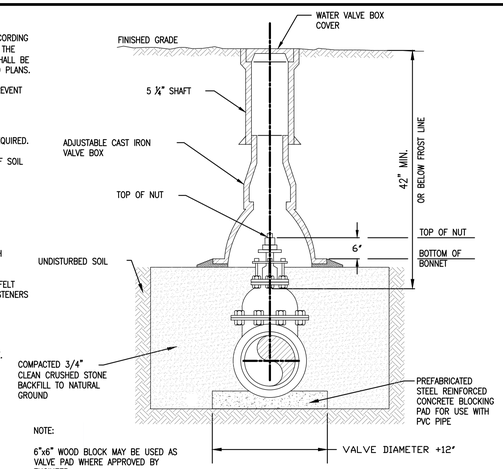

NOTE:

6"x6" WOOD BLOCK MAY BE USED AS VALVE PAD WHERE APPROVED BY ENGINEER.

VALVE BOX INSTALLATION FOR FROST AREAS

NO SCALE

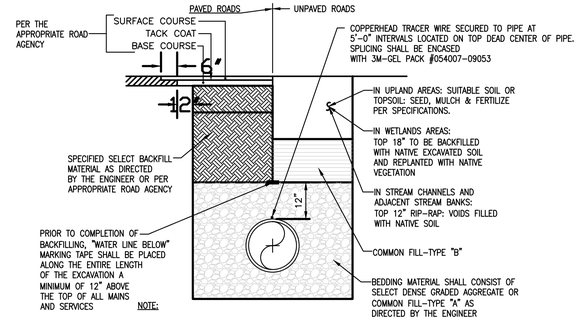

NOTE:

ALL BEDDING AND BACKFILL MATERIALS SHALL BE PROVIDED, PLACED AND COMPACTED IN SPECIFIED LIFTS IN ACCORDANCE WITH THE ENGINEER'S DIRECTION OR THE REQUIREMENTS OF THE REGULATING AGENCY HAVING JURISDICTION IF MORE STRINGENT

TRENCH BACKFILL DETAIL

NO SCALE

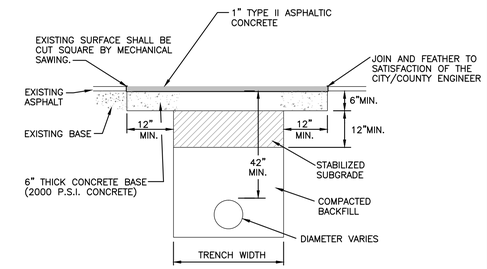

ALL BACKFILLING SHALL BE DONE WITH SUITABLE MATERIAL, TAMPED IN LAYERS NOT TO EXCEED 6", IN ACCORDANCE WITH DIVISION OF TRANSPORTATION'S SPECIFICATIONS.

PAVEMENT REPAIR DETAIL

NO SCALE — SEE BACKFILL SPECIFICATION FOR ADDITIONAL DEPTH (6" MIN.)

MAXIMUM JOINT DEFLECTION DUCTILE IRON PUSH ON PIPE

NOMINAL PIPE SIZE	DEFLECTION ANGLE	MAX OFFSET - S		APPROXIMATE RADIUS OF CURVATURE - R PRODUCED BY SUCCESSION OF ANGLED JOINTS	
INCHES	DEGREES	INCHES		FEET	
		L=18 FT	L=20 FT	L=18 FT	L=20 FT
3	4	15	17	256	285
4	4	15	17	256	285
6	4	15	17	256	285
8	4	15	17	256	285
10	4	15	17	256	285
12	4	15	17	256	285
14	4	9	10	256	285
16	2.5	9	10	429	476
18	2.5	9	10	429	476
20	2.5	9	10	429	476
24	2.5	9	10	429	476

MAXIMUM JOINT DEFLECTION DUCTILE IRON PUSH ON PIPE

NOMINAL PIPE SIZE	DEFLECTION ANGLE	MAX OFFSET - S		APPROXIMATE RADIUS OF CURVATURE - R PRODUCED BY SUCCESSION OF ANGLED JOINTS	
INCHES	DEGREES	INCHES		FEET	
		L=18 FT	L=20 FT	L=18 FT	L=20 FT
3	4	15	17	256	285
4	4	15	17	256	285
6	4	15	17	256	285
8	4	15	17	256	285
10	4	15	17	256	285
12	4	15	17	256	285
14	4	9	10	256	285
16	2.5	9	10	429	476
18	2.5	9	10	429	476
20	2.5	9	10	429	476
24	2.5	9	10	429	476

MAXIMUM JOINT DEFLECTION
FULL-LENGTH PIPE-PUSH-ON TYPE JOINT PIPE

NO SCALE

NOTE:

1. PIPE JOINT DEFLECTION ALLOWED ON DUCTILE IRON PIPE ONLY. **PIPE JOINT DEFLECTION NOT ALLOWED ON PVC PIPE.**

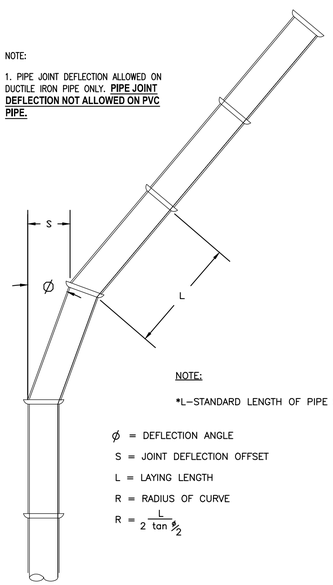

NOTE:

*L=STANDARD LENGTH OF PIPE SECTION.

ϕ = DEFLECTION ANGLE

S = JOINT DEFLECTION OFFSET

L = LAYING LENGTH

R = RADIUS OF CURVE

$R = \frac{L}{2 \tan \frac{\phi}{2}}$

PIPE CURVE GEOMETRY - TYPICAL DETAIL

HORIZONTAL BENDS AND VERTICAL OFFSETS (See Notes Below)

Nominal Pipe Size (Inches)	Type of Bend	Restrained Joint Length (feet)			
		90-degree	45-degree	22.5-degree	11.25-degree
4	Horizontal	18	10	10	10
4	Vertical (Upper)		22	11	10
4	Vertical (Lower)		10	10	10

PIPE JOINT RESTRAINT TABLE

NO SCALE

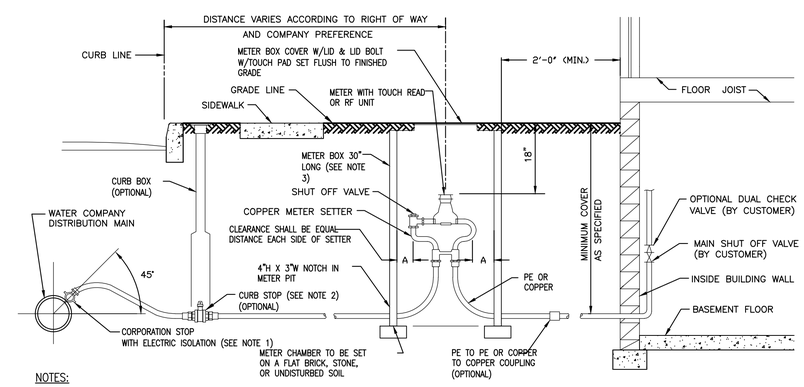

NOTES:

1. CORPORATION STOP WITH STRAIGHT COUPLING NUT. SERVICE SADDLES WILL BE USED FOR ALL TAPS IN A/C, PVC OR CONCRETE MAINS.
2. MATERIAL UTILIZED SHOULD BE TYPE "K" (OR "L" COPPER IF PERMITTED) WITH A COPPER TO COPPER CURB STOP, BOTH ENDS COMPRESSION FITTING, POLYETHYLENE ENCASE AS REQUIRED.
3. 18" I.D. CHAMBER FOR USE WITH 5/8" METER. 20" I.D. CHAMBER FOR USE WITH 1" METER. SQUARE METER PITS MAY BE USED IF LOCAL PREFERENCE EXISTS.
4. METER BOX LOCATION TO BE DETERMINED BY LOCAL AUTHORITY AND AWW.
5. SERVICE LINE AND METER BOX OWNERSHIP VARIES BY LOCAL TARIFF.
6. POLYWRAP SERVICE FROM MAIN TO METER PIT IF SOIL IS CORROSIVE.
7. IN HEAVY FROST AREAS, A PLASTIC INNER LID AND BLANKET CAN BE USED.
8. CONNECTIONS BETWEEN PIPE LENGTHS SHALL BE COMPRESSION OR FLARE AND MAY DEPEND ON LOCAL PLUMBING REQUIREMENT.

SINGLE WATER SERVICE CONNECTION FOR 3/4" METERS

DISTRICT OFFICE: JOHNSON COUNTY OPERATIONS

PROJECT: LINCOLN COURT
WASHINGTON ST. TO DEAD END
WATER MAIN REPLACEMENT
WBS R10-01B1.12-P-0021

REVISIONS

REV. #	DATE
7	
6	
5	
4	
3	
2	
1	

MICHAEL WAYNE SEALS
REGISTERED No. 19300365 STATE OF INDIANA
PROFESSIONAL ENGINEER

INDIANA AMERICAN WATER
ENGINEERING DEPARTMENT
555 E. COUNTY LINE ROAD
GREENWOOD, INDIANA 46143

SHEET TITLE: STANDARD DETAILS

DATE:	MARCH, 2013
DESIGNED BY:	J. SANDERS
DRAWN BY:	S. FORD
SCALES:	N/A
SHEET	3 OF 3