PROPOSED SITE IMPROVEMENTS FOR A BUILDING ADDITION AND NEW PARKING LOT

Homeview Healthcare & Rehabilitation

651 State Street

Franklin, Johnson County, Indiana 46131

GENERAL DESCRIPTION OF PROPOSED IMPROVEMENTS

This project consists of the necessary site improvements to construct a building addition onto the existing Homeview Healthcare & Rehabilitation Center. This includes demolition of a portion of existing site improvements, site grading, extension of dedicated waterline, new sanitary sewer connection, new waterline connections, storm collection system (both off-site and on-site), storm water detention and water quality systems, and parking lot improvements. These improvements includes lands on both the northerly and southerly side of Palmer Street, located at 651 State Street. The purpose of the building addition is add additional rooms so to convert rooms with shared beds into private rooms. In addition, rehabilitation facilities will be enlarged and improved. The number of employees is currently 140. No additional employment is planned as a result of this project.

LAND DESCRIPTIONS OF PARCELS

LANDS NORTH OF PALMER STREET:
Homeview Center North Parking Lot Parcel (Combined)

A part of the lands defined in Instruments #2002-034113 (Georganna Halton), #2010-006403 (Carmel K Sanders), #2014-006496 (Dirinda F. Asher) and #2003-012996 (Johnson County Public Library), all recorded in the office of the Recorder, Johnson County, Indiana, being a part of the Northeast Quarter of Section 23, and the Northwest Quarter of Section 24, both in Township 12 North, Range 4 East, of the second Principal Meridian, Franklin Township, Johnson County, Indiana, more particularly described as follows:

Commencing on the East Line of said Northeast Quarter section, said line also being the West Line of said Northwest Quarter section, 1526 feet, more or less, south of the Northeast corner thereof, said point being the intersection of said East and West Line, with the Northerly right-of-way line of Palmer Street, as now located; thence South 44 degrees, 06 minutes, 01 seconds West, (basis of bearing per ALTA surveys of the subject parcels, prepared by Miller Surveying, dated November 14, 2014); along said northerly right-of-way line, and the southerly line of said Halton and Johnson County Library parcels, 107.70 feet, to a point on the easterly right-of-way line of State Street as now located and the southwesterly corner of last said parcel; thence North 23 degrees, 47 minutes, 59 seconds West, along said easterly right-of-way line and westerly line of last said parcel, 86.98 feet; thence North 44 degrees, 06 minutes, 01 seconds East, parallel with said northerly right-of-way line of Palmer Street and across all four referenced parcels, 289.12 feet, to a point on the easterly line of said Asher parcel, said point being on the common line of said Asher parcel with the parcel described in Instrument #87647 (Brown); thence South 47 degrees, 33 minutes, 59 seconds East, along said common parcel line, 80.62 feet, to the common south corner of last said parcels, said point being on said northerly right-of-way line of said Palmer Street; thence South 44 degrees, 06 minutes, 01 seconds West, along said right-of-way line, 216.49 feet to the POINT OF BEGINNING, containing 0.567 acres (27,712.9 square feet), more or less.

LANDS SOUTH OF PALMER STREET:
A PART OF THE NORTHWEST QUARTER OF SECTION 24, TOWNSHIP 12 NORTH, RANGE 4 EAST AND PART OF THE NORTHEAST QUARTER OF SECTION 23, TOWNSHIP 12 NORTH, RANGE 4 EAST LOCATED IN JOHNSON COUNTY, INDIANA, DESCRIBED AS FOLLOWS:

COMMENCING AT THE MAGSPIKE SET AT THE SOUTHWEST CORNER OF THE NORTHWEST QUARTER OF SECTION 24, TOWNSHIP 12 NORTH, RANGE 4 EAST THENCE NORTH 00 DEGREES 29 MINUTES 41 SECONDS WEST (ASSUMED BEARING) 1126.51 FEET TO A 5/8" STEEL REBAR WITH YELLOW CAP STAMPED "MILLER SURVEYING" ON THE SOUTH LINE OF PALMER STREET AND THE POINT OF BEGINNING OF THIS DESCRIPTION. THENCE SOUTH 44 DEGREES 06 MINUTES 01 SECONDS WEST 69.53 FEET ALONG THE MONUMENTED SOUTH LINE OF SAID PALMER STREET (ALSO THE NORTH LINE OF THE 1.598 ACRE TRACT OF REAL ESTATE DESCRIBED IN INSTRUMENT #980038200) TO A 5/8" STEEL REBAR WITH YELLOW CAP STAMPED "MILLER SURVEYING" AT THE POINT OF INTERSECTION OF SAID SOUTH LINE AND THE EASTERLY RIGHT-OF-WAY LINE OF STATE STREET (OLD U.S. 31) SAID 5/8" STEEL REBAR WITH YELLOW CAP STAMPED "MILLER SURVEYING" BEING 30 FEET MEASURED RADIALLY FROM THE AS BUILT CENTERLINE OF STATE STREET. (SEPTEMBER 2015). THENCE SOUTHEASTERLY (30 FEET MEASURED NORTHEASTERLY FROM SAID CENTERLINE) ALONG A NON TANGENT CURVE TO THE LEFT, SAID CURVE HAVING A RADIUS OF 1703.52 FEET, AN ARC LENGTH OF 148.26 AND BEING SUBTENDED BY A CHORD HAVING A BEARING OF SOUTH 28 DEGREES 19 MINUTES 53 SECONDS EAST A CHORD DISTANCE OF 148.21 FEET TO A 5/8" STEEL REBAR WITH YELLOW CAP STAMPED "MILLER SURVEYING"; THENCE SOUTHEASTERLY (30 FEET MEASURED NORTHEASTERLY FROM SAID CENTERLINE) ALONG A NON TANGENT CURVE TO THE LEFT, SAID CURVE HAVING A RADIUS OF 1243.25 , AN ARC LENGTH OF 138.84 FEET SUBTENDED BY A CHORD HAVING A BEARING OF SOUTH 33 DEGREES 40 MINUTES 27 SECONDS EAST A CHORD DISTANCE OF 138.77 FEET TO A 5/8" STEEL REBAR WITH YELLOW CAP STAMPED "MILLER SURVEYING" AT THE POINT OF TERMINUS OF SAID CURVE TO THE LEFT. THENCE SOUTH 43 DEGREES 16 MINUTES 00 SECONDS EAST 9.20 FEET PARALLEL WITH SAID CENTERLINE TO A 5/8" STEEL REBAR WITH YELLOW CAP STAMPED "MILLER SURVEYING" ON THE SOUTH LINE OF TRACT 2 AS DESCRIBED IN INSTRUMENT #2004-028120; THENCE NORTH 43 DEGREES 20 MINUTES 19 SECONDS EAST 282.90 FEET ALONG THE SOUTH LINE OF SAID TRACT 2 TO A 5/8" STEEL REBAR WITH YELLOW CAP STAMPED "MILLER SURVEYING" AT THE SOUTHEASTERLY CORNER OF SAID TRACT 2. THENCE NORTH 36 DEGREES 51 MINUTES 48 SECONDS WEST 65.74 FEET (PARALLEL WITH AND 300 FEET NORTHEAST OF THE MIDDLE OF THE MADISON AND INDIANAPOLIS STATE ROAD AS DESCRIBED IN D.R. 71, P.491-493) AND ALONG THE EASTERLY LINE OF SAID TRACT 2 TO A 5/8" STEEL REBAR WITH YELLOW CAP STAMPED "MILLER SURVEYING" ON THE SOUTH LINE OF TRACT 1 AS DESCRIBED IN INSTRUMENT #2004-028120. THENCE NORTH 43 DEGREES 20 MINUTES 19 SECONDS EAST 246.43 FEET TO A 5/8" STEEL REBAR WITH YELLOW CAP STAMPED "MILLER SURVEYING" AT THE SOUTHEASTERLY CORNER OF SAID TRACT 1. THENCE NORTH 49 DEGREES 09 MINUTES 30 SECONDS WEST 93.75 FEET PARALLEL WITH AND 63 FEET MEASURED SOUTHWESTERLY FROM THE CENTERLINE OF THE CONRAIL RAILROAD ALONG THE EASTERLY LINE OF SAID TRACT 1 AND SAID EASTERLY LINE EXTENDED NORTHWEST TO A MAGNAIL ON THE SOUTH LINE OF SAID 1.598 ACRE TRACT. THENCE NORTH 41 DEGREES 44 MINUTES 01 SECONDS EAST 33.37 FEET ALONG THE SOUTH LINE OF SAID 1.598 ACRE TRACT TO A 5/8" STEEL REBAR WITH YELLOW CAP STAMPED "MILLER SURVEYING" AT THE SOUTHEASTERLY CORNER OF SAID 1.598 ACRE TRACT. THENCE NORTH 59 DEGREES 47 MINUTES 59 SECONDS WEST 122.70 FEET ALONG THE EASTERLY LINE OF SAID 1.598 ACRE TRACT TO A CALLED FOR AND FOUND IRON PIN AT THE NORTHEASTERLY CORNER OF SAID 1.598 ACRE TRACT. THENCE SOUTH 44 DEGREES 06 MINUTES 01 SECONDS WEST 393.27 FEET ALONG THE SOUTH LINE OF PALMER STREET TO THE POINT OF BEGINNING, CONTAINING 2.942 ACRES, MORE OR LESS.

GENERAL NOTES AND SPECIFICATIONS

ALL BUILDING CONSTRUCTION WORK, ALTERATIONS, REPAIRS AND MECHANICAL INSTALLATIONS CONNECTED THEREWITH SHALL COMPLY WITH ALL LOCAL, STATE BUILDING RULES AND REGULATIONS. LOCAL ORDINANCES SHALL BE FOLLOWED.

ALL IMPROVEMENTS SHALL MEET THE REQUIREMENTS FOR DEDICATED IMPROVEMENTS TO THE CITY OF FRANKLIN, INDIANA AMERICAN WATER, AND ANY OTHER AUTHORITIES HAVING JURISDICTION.

DRAWINGS ARE DIAGRAMMATIC AND SCHEMATIC AND INDICATE THE GENERAL ARRANGEMENT ONLY. EACH CONTRACTOR SHALL MAKE HIS WORK COMPLETE AND PERFECT IN ALL RESPECTS AND READY FOR OPERATION. ALL REQUIRED WORK, EVEN IF PARTICULARLY NOT SPECIFIED, SHALL BE FURNISHED AND INSTALLED BY THE CONTRACTOR WITHOUT ADDITIONAL EXPENSE TO THE OWNER. DRAWINGS ARE AT SUCH A SCALE THAT IT IS NOT POSSIBLE TO INDICATE OFFSETS, FITTINGS AND ACCESSORIES WHICH MAY BE REQUIRED OF THE RESPECTIVE CONTRACTORS.

CONTRACTOR SHALL FURNISH ALL LABOR, MATERIALS, TOOLS, AND EQUIPMENT NECESSARY TO COMPLETE ALL WORK SHOWN ON THE DRAWINGS AND SPECIFIED HEREIN. WHERE REQUIRED, SUBMIT SAMPLES AND/OR SHOP DRAWINGS FOR APPROVAL BY ENGINEER.

CONTRACTOR SHALL HAVE CONTROL OR CHARGE OF, AND SHALL BE RESPONSIBLE FOR CONSTRUCTION MEANS, METHODS, TECHNIQUES, SEQUENCES OF PROCEDURES AND FOR SAFETY PRECAUTIONS AND PROGRAMS IN CONNECTION WITH WORK. CONTRACTOR SHALL BE RESPONSIBLE FOR AND CORRECT ALL ACTS OF OMISSIONS OF THE CONTRACTOR, SUBCONTRACTOR OR PERSONS PERFORMING ANY OF THE WORK, OR FAILURE OF THEM TO CARRY OUT THE WORK IN ACCORDANCE WITH THE CONTRACT DOCUMENTS.

EACH CONTRACTOR SHALL OBTAIN NECESSARY MEASUREMENTS FROM OTHER CONTRACTORS IN ORDER THAT HIS WORK FIT OTHER BRANCHES OF WORK AND SHALL FURTHER VERIFY NECESSARY MEASUREMENTS OF BUILDING IN ORDER THAT HIS WORK MAY FIT THAT ALREADY IN PLACE.

CONTRACTOR IS RESPONSIBLE FOR REVIEWING CONSTRUCTION DOCUMENTS AND REPORTING ANY DISCREPANCIES IN WRITING TO THE ENGINEER PRIOR BEGINNING OF CONSTRUCTION. CONTRACTOR ASSUMES ALL RESPONSIBILITY FOR DISCREPANCIES NOT REPORTED PRIOR TO COMMENCEMENT OF CONSTRUCTION.

CONTRACTOR IS TO INFORM ENGINEER OF ANY CHANGE OF FIELD CONDITIONS THAT AFFECTS CONSTRUCTION OF SPACE IN ACCORDANCE WITH CONSTRUCTION DOCUMENTS.

CONTRACTOR IS RESPONSIBLE FOR REPAIRING ALL DAMAGED WORK AS RECOMMENDED BY APPLICABLE MANUFACTURER, OR INDUSTRY STANDARDS. REPAIRS SHALL BE MADE TO THE SATISFACTION OF THE ENGINEER, OR DAMAGED MATERIALS/AREAS SHOULD BE REPLACED AT NO COST TO THE OWNER.

CONTRACTOR IS TO FIELD VERIFY EXISTING CONDITIONS AND REPORT ANY DISCREPANCIES TO THE ENGINEER PRIOR TO COMMENCING WORK.

SOME IMPROVEMENTS ARE REQUIRED TO BE DEDICATED TO THE CITY OF FRANKLIN AND INDIANA AMERICAN. THE CONTRACTOR IS RESPONSIBLE FOR PROVIDING ANY TESTS, AS-BUILT MEASUREMENTS, AND OTHER INFORMATION AS NEEDED TO COMPLETED THE DEDICATION REQUIREMENTS.

UPON COMPLETION OF WORK, AREAS AFFECTED BY THE WORK ARE TO BE BROOM CLEAN.

CODE INFORMATION AND GENERAL SPECIFICATIONS FOR SITE:

THE CONTRACTOR(S) SHALL VERIFY THAT ALL WORK IS IN CONFORMANCE WITH THE APPLICABLE CODES AND REGULATIONS. IF ANY UNREASONABLE MISUNDERSTANDINGS ARISE AS THE INTENT OF THE DESIGNS OR CONSTRUCTION, IT IS HEREBY AGREED BY ALL PARTIES THAT THE RULES OF THE AMERICAN ARBITRATION ASSOCIATION SHALL PREVAIL. IN THE EVENT OF DEVIATION BETWEEN THE DRAWINGS AND PROVISIONS OF THE CODE AND REGULATIONS, THE CODE AND REGULATIONS REQUIREMENTS SHALL APPLY.

ANY DISCREPANCIES FOUND IN THE PLANS MUST BE BROUGHT TO THE ATTENTION TO THE OWNER AND HIS REPRESENTATIVES PRIOR TO CONSTRUCTION OF ANY FACILITIES AFFECTED. THE OWNER WILL NOT BE RESPONSIBLE FOR ANY ADDITIONAL EXPENSES THAT ARISE FROM THE CONTRACTOR ASSUMING AND TAKING ACTION ON ANY DISCREPANCY WITHOUT NOTIFYING THE OWNER AND HIS REPRESENTATIVES.

IN THE EVENT OF A CONFLICT BETWEEN THE TERMS AND PROVISIONS OF THE IN CENTER BUILDING SHELL EXHIBIT AND ANY OF THE BIDDING DRAWINGS OR SPECIFICATIONS, THE IN CENTER BUILDING SHELL EXHIBIT SHALL GOVERN. IF CONFLICTS ARE FOUND, THE CONTRACTOR SHALL NOTIFY THE OWNER REPRESENTATIVE AT LEAST 7 CALENDAR DAYS PRIOR TO THE BID FOR CLARIFICATION. IF NOTIFICATION BY THE CONTRACTOR IS NOT PROVIDED WITHIN THIS TIME PERIOD, THEN THE CONTRACTOR SHALL HAVE INCLUDED THE IN CENTER BUILDING SHELL EXHIBIT REQUIREMENTS.

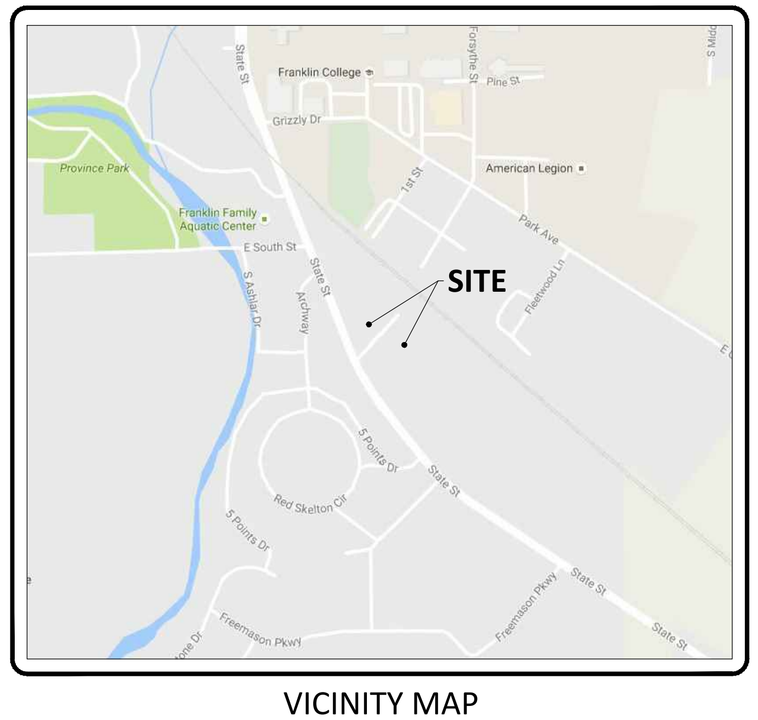

VICINITY MAP

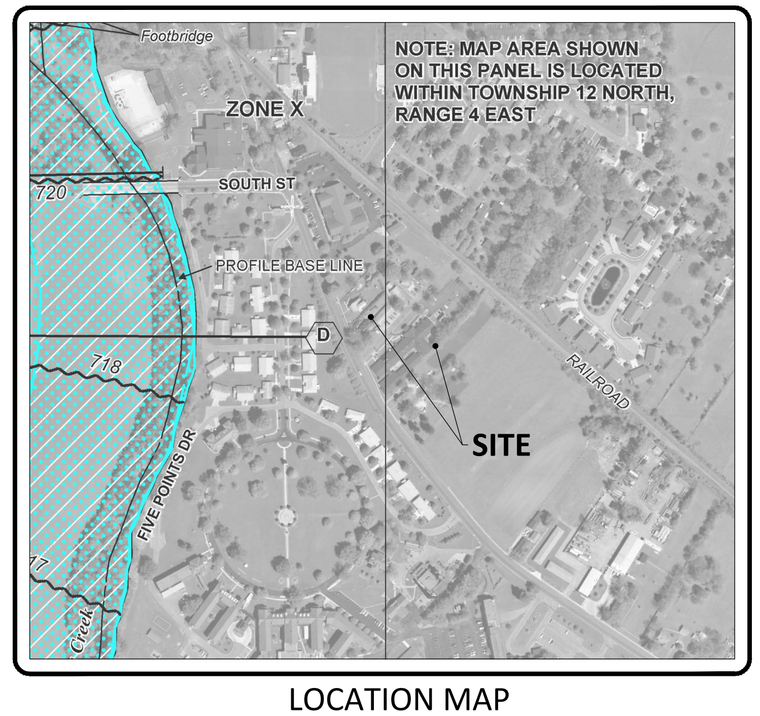

LOCATION MAP
(Based on FEMA Map #18081C0231D, dated August 7, 2007)

LIST OF DRAWINGS

Issue Date: 08.19.2016

NO.	SHEET	REVISION DATE
C000	TITLE SHEET	08.19.2016
C101	EXISTING ALTA LAND TITLE SURVEY & TOPOGRAPHY, Page 1 (PREPARED BY MILLER SURVEYING, INC)	01.11.2016
C102	EXISTING ALTA LAND TITLE SURVEY & TOPOGRAPHY, Page 1 (PREPARED BY MILLER SURVEYING, INC)	01.11.2016
C103	RETRACEMENT – ORIGINAL SURVEY, COMBINING PARCELS NORTH OF PALMER	
C201	SITE LOCATION PLAN	01.11.2016
C203	SITE PHOTOMETRIC PLAN	08.19.2016
C204	SITE PHOTOMETRIC PLAN EQUIPMENT LIST	08.19.2016
C301	SITE GRADING PLAN	08.19.2016
C302	SITE EROSION CONTROL PLAN	08.19.2016
C303	SITE DETAILS EROSION CONTROL	08.19.2016
C401	SITE LANDSCAPE PLAN	08.19.2016
C501	SITE UTILITY PLAN	08.19.2016
C601	SITE DETAILS	08.19.2016
C602	SITE STANDARD DETAILS/SANITARY-STORM-WATER	08.19.2016

REVISIONS

DATE	DESCRIPTION	SHEETS REVISED

OWNER:
HOMEVIEW HEALTHCARE OPERATIONS COMPANY, INC.
1800 N Wabash Ave
Marion, IN 46952
PH 765-664-5400

BUILDING ENGINEERS:
AET,INC.
12358 HOOSIER ROAD
FISHERS, IN 46038
PH 317-842-3003
FX 317-842-3458
EMAIL: aetinc.robta@gmail.com

SITE CONSULTANTS:
LAND FOCUS CONSULTING
PO BOX 67
PENDLETON, IN 46064
PH 765-778-4540
EMAIL: s.bourquein@landfocusconsulting.com

PROFESSIONAL CERTIFICATION

CERTIFYING THAT THE INFORMATION SHOWN HEREIN FOR THE PREPARATION OF THE SITE LOCATION PLAN, SITE GRADING PLAN, SITE UTILITY PLAN AND THEIR ASSOCIATED SECTIONS AND DETAILS WERE PREPARED UNDER MY DIRECT SUPERVISION AND REVIEW BASED ON AVAILABLE DOCUMENTS AND FIELD MEASUREMENTS AVAILABLE AT THE DATES NOTED AND FOR THE EXCLUSIVE USE OF THE CLIENT NOTED HEREON.

Stephen E. Bourquein
Indiana Professional Surveyor #80040441
(certification not valid without original signature)

STEPHEN E. BOURQUEIN REGISTERED No. S0441 STATE OF INDIANA LAND SURVEYOR

DATE
08.19.2016

SHEET
C000

THESE DESIGNS AND DRAWINGS ARE PROTECTED BY FEDERAL COPYRIGHT LAWS AND MAY NOT BE COPIED, REPRODUCED, MODIFIED, DISTRIBUTED OR USED IN ANY OTHER WAY WITHOUT THE SPECIFIC CONSENT OF LAND FOCUS CONSULTING THE COPYRIGHT OWNER

G:\TLC\Franklin\Building Addition\Final\C000 Title Sheet.dwg, Layout1, 8/17/2016 6:43:01 PM

RETRACEMENT - ORIGINAL SURVEY

PART OF THE N.E. QUARTER OF SECTION 23 AND N.W. QUARTER OF SECTION 24, TOWNSHIP 12 NORTH, RANGE 4 EAST
FRANKLIN & NEEDAM TOWNSHIPS, JOHNSON COUNTY, INDIANA

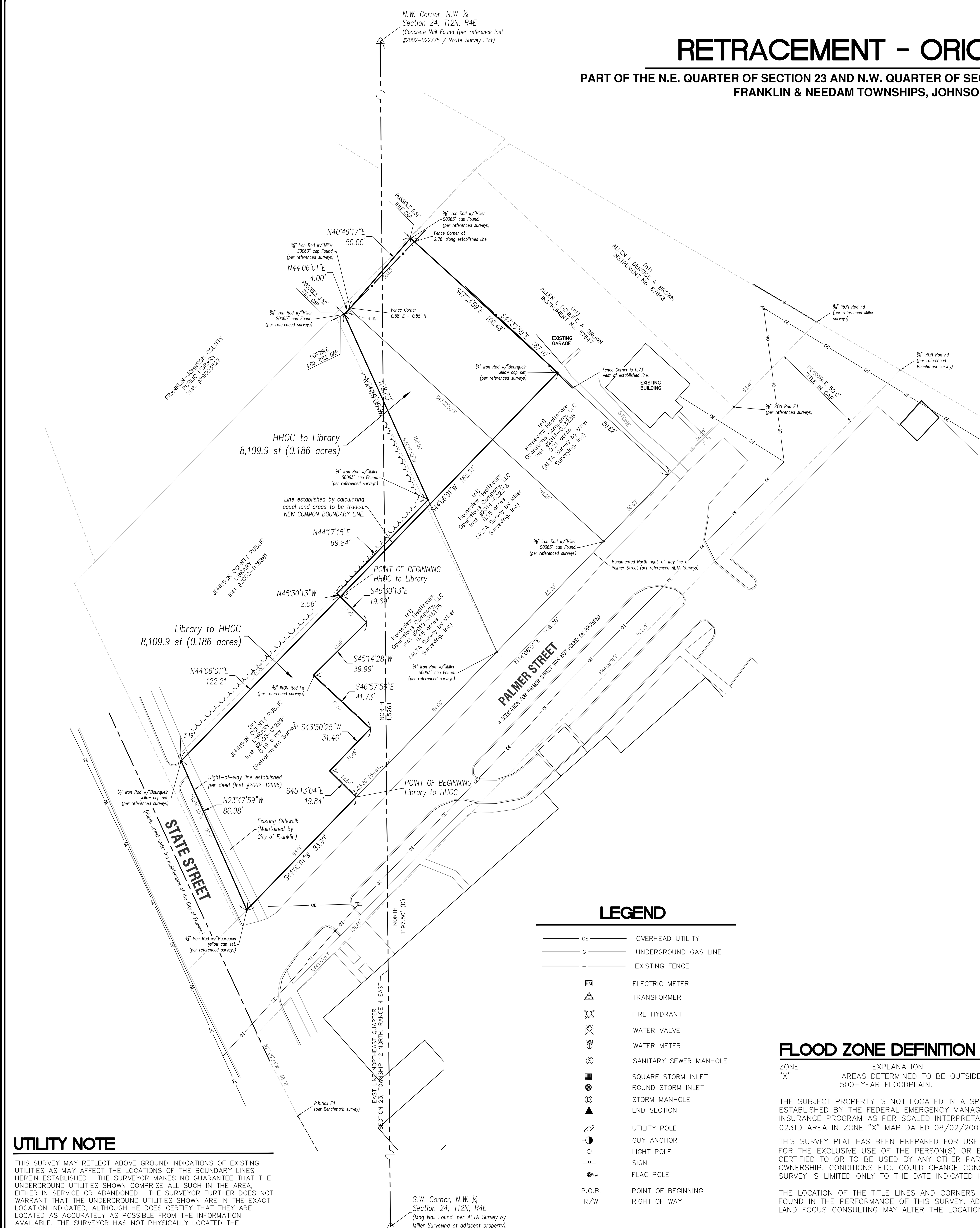

VICINITY MAP
NOT TO SCALE

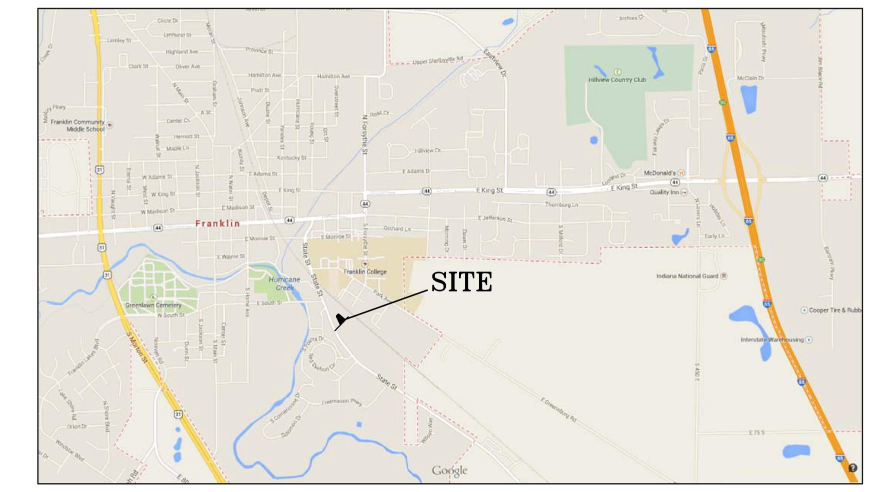

SURVEYOR'S REPORT

IN ACCORDANCE WITH TITLE 865, ARTICLE 1, CHAPTER 12 OF THE INDIANA ADMINISTRATIVE CODE (RULES FOR LAND SURVEYS IN INDIANA), THE FOLLOWING OBSERVATIONS AND OPINIONS ARE SUBMITTED REGARDING THE VARIOUS UNCERTAINTIES IN THE LOCATIONS OF THE LINES AND CORNERS ESTABLISHED THIS SURVEY AS A RESULT OF UNCERTAINTIES IN REFERENCE MONUMENTATION; IN RECORD DESCRIPTIONS AND PLATS; IN LINES OF OCCUPATION; AND AS INTRODUCED BY RANDOM ERRORS IN MEASUREMENT ("RELATIVE POSITIONAL ACCURACY"). THERE MAY BE UNWRITTEN RIGHTS ASSOCIATED WITH THESE UNCERTAINTIES. THE CLIENT SHOULD ASSUME THERE IS AN AMOUNT OF UNCERTAINTY ALONG ANY LINE EQUAL IN MAGNITUDE TO THE DISCREPANCY IN THE LOCATION OF THE LINES OF POSSESSION FROM THE SURVEYED LINES.

THERE MAY BE DIFFERENCES OF DEED DIMENSIONS VERSUS MEASURED DIMENSIONS ALONG THE BOUNDARY LINES SHOWN HEREON AND LIKEWISE, THERE MAY BE FOUND SURVEY MARKERS NEAR, BUT NOT PRECISELY AT, SOME BOUNDARY CORNERS. IN CASES WHERE THE MAGNITUDE OF THESE DIFFERENCES ARE LESS THAN THE RELATIVE POSITIONAL ACCURACY AND LESS THAN THE UNCERTAINTY IDENTIFIED FOR THE REFERENCE MONUMENTATION (DISCUSSED BELOW), THE DIFFERENCES MAY BE CONSIDERED INSIGNIFICANT AND ARE SHOWN ONLY FOR PURPOSES OF MATHEMATICAL CLOSURE. SUCH DIFFERENCES THAT ARE GREATER THAN THE RELATIVE POSITIONAL ACCURACY AND THE UNCERTAINTY IN REFERENCE MONUMENTATION SHOULD BE CONSIDERED WORTHY OF NOTICE AND ARE THEREFORE DISCUSSED FURTHER BELOW.

THIS SURVEY AND REPORT ARE BASED IN PART UPON OPINIONS FORMED IN ACCORDANCE WITH AN INDIANA LAND SURVEYOR'S RESPONSIBILITY TO CONDUCT A SURVEY IN ACCORDANCE WITH "LAW OR A PRECEDENT" (865 IAC 1-12-11(5), RULES OF THE INDIANA STATE BOARD OF REGISTRATION FOR LAND SURVEYORS). SINCE INDIANA HAS NO STATUTES ADDRESSING HOW TO RESOLVE BOUNDARY LINES, A SOLUTION BASED ON PRINCIPLES DERIVED FROM COMMON LAW PRECEDENT MUST BE RELIED UPON AS THE BASIS FOR A BOUNDARY RESOLUTION. UNLESS OTHERWISE NOTED OR DEPICTED HEREON, THERE IS NO EVIDENCE OF OCCUPATION ALONG THE PERIMETER LINES OF THE SUBJECT TRACT. ALL SURVEY MONUMENTS SET OR FOUND THIS SURVEY ARE FLUSH WITH EXISTING GRADE UNLESS OTHERWISE NOTED.

THE RELATIVE POSITIONAL ACCURACY (DUE TO RANDOM ERRORS IN MEASUREMENT) OF THE CORNERS OF THE SUBJECT TRACT ESTABLISHED THIS SURVEY DOES NOT EXCEED THAT ALLOWABLE FOR A RURAL CLASS SURVEY (0.26 FEET PLUS 200 PPM) AS DEFINED IN IAC 865.

THE WITHIN SURVEY IS TWO PARTS:

1) A RETRACEMENT SURVEY OF A PARCEL IN THE TITLE OF THE JOHNSON COUNTY PUBLIC LIBRARY AS DEFINED IN A CORPORATE WARRANTY DEED RECORDED AS INSTRUMENT #2003-012996. AN ALTA/ACSM LAND TITLE SURVEY OF A TRACT OF REAL ESTATE DESCRIBED IN INSTRUMENT #2010-006403. (ADDRESS 605 S. STATE STREET)

2) USING THE ABOVE DEFINED PARCEL AND 3 PARCELS IN THE OWNERSHIP OF HOMEVIEW HEALTHCARE OPERATIONS COMPANY, LLC (INSTRUMENTS # 2014-022218, 2014-023238 AND 2015-016175) (ADDRESSES 506, 510, AND 530 PALMER STREET) DEFINE AND ESTABLISH A NEW COMMON BOUNDARY LINE. THE LOCATION OF THIS NEW COMMON BOUNDARY LINE IS BASED ON A CREATING A LAND TRADE OF TWO PARCELS THE EXACT SAME SIZE (ORIGINAL SURVEYS).

REFERENCE INFORMATION:

ALTA SURVEYS FOR THE THREE PARCELS IN THE OWNERSHIP OF HOMEVIEW HEALTHCARE OPERATIONS COMPANY, LLC, PREPARED BY MILLER SURVEYING, INC.

A SURVEY DATED 12/16/2002 PREPARED BY BENCHMARK SURVEYING OF PROPERTIES ON THE SOUTHERLY SIDE OF PALMER STREET.

DEEDS OF THE SUBJECT PROPERTIES.

ESTABLISHMENT OF BOUNDARY OF LIBRARY PARCEL:

SOUTHERLY LINE WAS HELD TO THE ESTABLISHED NORTHERLY RIGHT-OF-WAY OF PALMER STREET PER REFERENCED MILLER SURVEYS.

WESTERLY LINE WAS ESTABLISHED BY HOLDING DEED DISTANCES. NOTE THAT AN EXISTING SIDEWALK THAT APPEARS TO BE MAINTAINED BY THE CITY OF FRANKLIN ENCROACHES ALONG THIS LINE. RESEARCH ON OTHER ADJACENT PARCELS HELD BY THE LIBRARY DISCLOSES PURCHASES BY THE CITY OF ADDITIONAL RIGHT-OF-WAY. NO SUCH ADDITIONAL RIGHT-OF-WAY PURCHASE OR DEDICATION WAS FOUND OVER THE SUBJECT PARCEL. THE NORTHERLY LINE WAS ESTABLISHED AT THE DEED DISTANCE. THE EASTERLY LINE WAS ESTABLISHED AT THE DEED DISTANCES WHICH SOMEWHAT MATCH THE SURVEY OF THE ADJACENT PARCEL (506 PALMER STREET).

AS STATED IN THE REFERENCED MILLER SURVEYS: THE NORTH RIGHT OF WAY LINE OF PALMER STREET WAS ESTABLISHED BY FOUND MONUMENTS AND BY A PRIOR BENCHMARK SURVEYING INC SURVEY, DATED 12/16/2002.

BASIS OF BEARING: REFERENCED SURVEYS

FOUND AND CONTROLLING MONUMENTS:

PK NAIL FOUND PER BENCHMARK SURVEY INC SURVEY, DATED 12/16/2002.

5/8" IRON ROD FOUND PER BENCHMARK SURVEY INC SURVEY, DATED 12/16/2002

5/8" REBAR WITH "MILLER S0083" YELLOW CAP FOUND PER REFERENCED ALTA SURVEYS

IN MY OPINION, THERE IS 0.5 FEET OF UNCERTAINTY IN THE LOCATION OF THESE MONUMENTS.

1. POSSESSION TO THE SOUTH IS THE IMPROVEMENTS OF PALMER STREET.

2. POSSESSION TO THE WEST IS THE IMPROVEMENTS OF STATE STREET (SEE NOTE REGARDING THE APPARENT PUBLIC SIDEWALK).

IN MY OPINION, THERE IS 6 FEET OF UNCERTAINTY IN THE LOCATIONS DUE TO LINE OF POSSESSION. SPECIFICALLY THE SIDEWALK IMPROVEMENTS ALONG STATE STREET.

NO TITLE "GAPS" AND/OR "OVERLAPS" WERE FOUND WITH CURRENT DEED TO THE EAST AND NORTH.

2. THE ACCURACY OF ANY FLOOD HAZARD DATA SHOWN ON THIS REPORT IS SUBJECT TO MAP SCALE UNCERTAINTY AND TO ANY OTHER UNCERTAINTY IN LOCATION OR ELEVATION ON THE REFERENCED FLOOD INSURANCE RATE MAP. THE WITHIN DESCRIBED TRACT OF LAND LIES WITHIN ZONE "X" AS SAID TRACT PLOTS BY SCALE ON COMMUNITY PANEL NUMBER #18081C 0231D OF THE FLOOD INSURANCE RATE MAPS FOR JOHNSON COUNTY, INDIANA (MAPS DATED 08/02/2007)

3. OWNERSHIP INFORMATION INDICATED HEREON IS AS IDENTIFIED IN COUNTY RECORDS ON 04/02/2016.

4. THE SURVEY HEREIN DOES NOT PURPORT TO SHOW THE WATERSHED AREAS AFFECTING THE SUBJECT PARCELS NOR DOES IT PURPORT TO SHOW THE PRESENCE OR ABSENCE OF ALL REGULATED OR NON-REGULATED DITCHES OR DRAINS.

LAND DESCRIPTIONS

LAND DESCRIPTION (INST #2003-012996)
JOHNSON COUNTY PUBLIC LIBRARY

Part of the Northeast quarter of Section 23, Township 12 North, Range 4 East of the Second Principal Meridian described as follows:

Commencing on the East line of the said quarter section 1,526 feet, more or less, South of the Northeast corner thereof, said point being at the intersection of the said East line with the Northerly right-of way line of Palmer Street in the City of Franklin, Indiana; thence South 41 degrees 41 minutes 25 seconds West (assumed bearing) on and along the said right-of-way line 23.80 feet to the Point of Beginning of this described tract; thence South 41 degrees 41 minutes 25 seconds West 83.90 feet to the West right-of-way line of Old State Road 31; thence North 26 degrees 12 minutes 35 seconds West 90.17 feet; thence North 41 degrees 52 minutes 39 seconds East 121.03 feet; thence South 47 degrees 09 minutes 42 seconds East 22.25 feet; thence South 42 degrees 50 minutes 18 seconds West 39.70 feet; thence South 49 degrees 22 minutes 32 seconds East 41.73 feet; thence South 41 degrees 25 minutes 48 seconds West 31.46 feet; thence South 47 degrees 37 minutes 40 seconds East 19.83 feet to the Point of Beginning.

NEW LAND DESCRIPTION
JOHNSON COUNTY LIBRARY to HOMEVIEW HEALTHCARE OPERATIONS COMPANY, LLC.

A part of the lands defined in a Warranty Deed (Redfred, Inc to Johnson County Public Library), recorded as Instrument #2003-012996, in the office of the Recorder, Johnson County, Indiana, being a part of the Northeast Quarter of Section 23, Township 12 North, Range 4 East, of the second Principal Meridian, Franklin Township, Johnson County, Indiana, more particularly described as follows:

Commencing on the East Line of said quarter section, 1526 feet, more or less, south of the Northeast corner thereof, said point being the intersection of said East Line, with the Northerly right-of-way line of Palmer Street, as now located; thence South 44 degrees, 06 minutes, 01 seconds West, (basis of bearing per ALTA surveys of adjacent properties, prepared by Miller Surveying, dated November 14, 2014); along said northerly right-of-way line 23.80 feet (deed), to a southeast corner of said Parcel, said point being the common southerly corner of said Parcel with the parcel described in Instrument #2002-034113 (office of the Recorder), said point being the POINT OF BEGINNING; thence continuing thence South 44 degrees, 06 minutes, 01 seconds West, along said northerly right-of-way line, 83.90 feet, to a point on the easterly right-of-way line of State Street, as now located; thence North 23 degrees, 47 minutes, 59 seconds West, along said easterly right-of-way line, 86.98 feet; thence North 44 degrees, 06 minutes, 01 seconds East, parallel with said northerly right-of-way line of Palmer Street, 122.21 feet, to a point on an easterly line of said Library parcel, said point being on the common line of said Library parcel with the westerly line of said Instrument #2002-03113); (the next 5 courses being on and along said common lines of said parcels;
thence South 45 degrees, 30 minutes, 13 seconds East, 19.69 feet;
thence South 45 degrees, 14 minutes, 28 seconds West, 39.99 feet;
thence South 46 degrees, 57 minutes, 56 seconds East, 41.73 feet;
thence South 43 degrees, 50 minutes, 25 seconds West, 31.46 feet;
thence South 45 degrees, 13 minutes, 04 seconds East, 19.84 feet, to the POINT OF BEGINNING, containing 8,109.9 square feet, more or less.

NEW LAND DESCRIPTION
HOMEVIEW HEALTHCARE OPERATIONS COMPANY, LLC. to JOHNSON COUNTY LIBRARY

A part of the lands defined in Instruments #2014-022218 (Carmel K Sanders to Homeview Healthcare Operations Company, LLC), #2014-023238 (Asher to Homeview Healthcare Operations Company, LLC) and #2015-016175 (Haltom to Homeview Healthcare Operations Company, LLC), all recorded in the office of the Recorder, Johnson County, Indiana, being a part of the Northeast Quarter of Section 23, and the Northwest Quarter of Section 24, both in Township 12 North, Range 4 East, of the second Principal Meridian, Franklin Township, Johnson County, Indiana, more particularly described as follows:

Commencing on the East Line of said Northeast Quarter section, said line also being the West Line of said Northwest Quarter section, 1526 feet, more or less, south of the Northeast corner thereof, said point being the intersection of said East and West Line, with the Northerly right-of-way line of Palmer Street, as now located; thence South 44 degrees, 06 minutes, 01 seconds West, (basis of bearing per ALTA surveys of adjacent properties, prepared by Miller Surveying, dated November 14, 2014); along said northerly right-of-way line 23.80 feet (deed), to a common southerly corner of a Parcel described in Instrument #2003-012996 (Redfred, Inc to Johnson County Library), with the parcel described in said Instrument #2015-016175; thence continuing South 44 degrees, 06 minutes, 01 seconds West, along said northerly right-of-way line and southerly line of said Instrument #2003-012996, 83.90 feet, to a point on the easterly right-of-way line of State Street as now located and the southwesterly corner of last said parcel; thence North 23 degrees, 47 minutes, 59 seconds West, along said easterly right-of-way line and westerly line of last said parcel, 86.98 feet; thence North 44 degrees, 06 minutes, 01 seconds East, parallel with said northerly right-of-way line of Palmer Street, 122.21 feet, to a point on an easterly line of said Instrument #2003-012996, said point being common and on an westerly line of said Instrument #2015-016175, said point being the POINT OF BEGINNING; thence North 45 degrees, 30 minutes, 13 seconds West, along said common parcel line, 2.56 feet, to a northerly corner of last said parcel; thence North 44 degrees, 17 minutes 15 seconds East, along a northerly line of last said parcel, 69.84 feet to a point on the westerly line of said parcel described in said Instrument #2014-022218; thence North 24 degrees, 19 minutes, 00 seconds West, along the westerly line of last said parcel, 108.83 feet, to a northerly corner of last said parcel; thence North 44 degrees, 06 minutes 01 seconds East, along the northerly line of last said parcel, 4.00 feet, to a common northerly corner of last said parcel with said parcel described in Instrument #2014-023238; thence North 40 degrees, 46 minutes, 17 seconds East, along the northerly line of last said parcel, 50.00 feet to the northeast corner of last said parcel; thence South 47 degrees, 33 minutes, 59 seconds East, along the easterly line of last said parcel, 106.48 feet; thence South 44 degrees, 06 minutes, 01 seconds West, parallel with said northerly right-of-way line, 166.91 feet to the POINT OF BEGINNING, containing 8,109.9 square feet, more or less.

LEGEND

OE	OVERHEAD UTILITY
G	UNDERGROUND GAS LINE
+	EXISTING FENCE
EM	ELECTRIC METER
	TRANSFORMER
	FIRE HYDRANT
WV	WATER VALVE
WM	WATER METER
S	SANITARY SEWER MANHOLE
	SQUARE STORM INLET
	ROUND STORM INLET
D	STORM MANHOLE
	END SECTION
	UTILITY POLE
	GUY ANCHOR
	LIGHT POLE
	SIGN
	FLAG POLE
P.O.B.	POINT OF BEGINNING
R/W	RIGHT OF WAY

FLOOD ZONE DEFINITION

ZONE	EXPLANATION
"X"	AREAS DETERMINED TO BE OUTSIDE 500-YEAR FLOODPLAIN.

THE SUBJECT PROPERTY IS NOT LOCATED IN A SPECIAL FLOOD HAZARD AREA AS ESTABLISHED BY THE FEDERAL EMERGENCY MANAGEMENT AGENCY NATIONAL FLOOD INSURANCE PROGRAM AS PER SCALED INTERPRETATION OF FLOOD RATE MAP #18081C 0231D AREA IN ZONE "X" MAP DATED 08/02/2007.

THIS SURVEY PLAT HAS BEEN PREPARED FOR USE ON THIS PARTICULAR PROJECT AND FOR THE EXCLUSIVE USE OF THE PERSON(S) OR ENTITY HEREON NAMED AND IS NOT CERTIFIED TO OR TO BE USED BY ANY OTHER PARTY. THE EVIDENCE, POSSESSION, OWNERSHIP, CONDITIONS ETC. COULD CHANGE CONSTANTLY AND THE USE OF THIS SURVEY IS LIMITED ONLY TO THE DATE INDICATED HEREIN.

THE LOCATION OF THE TITLE LINES AND CORNERS ARE SUBJECT TO THE EVIDENCE FOUND IN THE PERFORMANCE OF THIS SURVEY. ADDITIONAL EVIDENCE PRESENTED TO LAND FOCUS CONSULTING MAY ALTER THE LOCATION OF THE TITLE LINES AND CORNERS.

UTILITY NOTE

THIS SURVEY MAY REFLECT ABOVE GROUND INDICATIONS OF EXISTING UTILITIES AS MAY AFFECT THE LOCATIONS OF THE BOUNDARY LINES HEREIN ESTABLISHED. THE SURVEYOR MAKES NO GUARANTEE THAT THE UNDERGROUND UTILITIES SHOWN COMPRISE ALL SUCH IN THE AREA, EITHER IN SERVICE OR ABANDONED. THE SURVEYOR FURTHER DOES NOT WARRANT THAT THE UNDERGROUND UTILITIES SHOWN ARE IN THE EXACT LOCATION INDICATED, ALTHOUGH HE DOES CERTIFY THAT THEY ARE LOCATED AS ACCURATELY AS POSSIBLE FROM THE INFORMATION AVAILABLE. THE SURVEYOR HAS NOT PHYSICALLY LOCATED THE UNDERGROUND UTILITIES.

CERTIFICATION

TO: HOMEVIEW HEALTHCARE OPERATIONS COMPANY, LLC

THIS IS TO CERTIFY THAT THIS MAP OR PLAT AND THE SURVEY ON WHICH IT IS BASED WERE MADE IN ACCORDANCE WITH TITLE 865, ARTICLE 1, CHAPTER 12 OF THE INDIANA ADMINISTRATIVE CODE (RULES FOR LAND SURVEYS IN INDIANA). ALL MONUMENTS NOTED AS SET EITHER ARE OR WILL BE SET. THE FIELD WORK WAS COMPLETED ON (12/18/2015) BY MILLER SURVEYING.

DATE: 01/29/2016
04/03/2016LR

SIGNED: [signature]
(Certification is not valid without original signature)
STEPHEN E BOURQUEIN, PLS
REGISTRATION NO. S0441

STEPHEN E. BOURQUEIN REGISTERED No. S0441 STATE OF INDIANA LAND SURVEYOR

North
1"=30'

Site Consultant
landfocus CONSULTING
LANDFOCUSCONSULTING.COM
P.O. Box 67, Pendleton, IN 46064
info@landfocusconsulting.com
w 765.778.4540 f 765.778.3571

Date 01.29.2016

Revision | Date

Project
Homeview Health & Rehabilitation
651 S. State Street
Franklin, Franklin & Needham Township, Johnson Co, Indiana

Sheet Title
Retracement-Original Survey
(for land trade with Johnson County Public Library)

Sheet No. 1
1 Civil Sheets

RETRACEMENT SURVEY

PART OF THE N.W. QUARTER, SECTION 24, TOWNSHIP 12 NORTH, RANGE 4 EAST AND PART OF THE N.E. QUARTER OF SECTION 23, TOWNSHIP 12 NORTH, RANGE 4 EAST

JOHNSON COUNTY, INDIANA

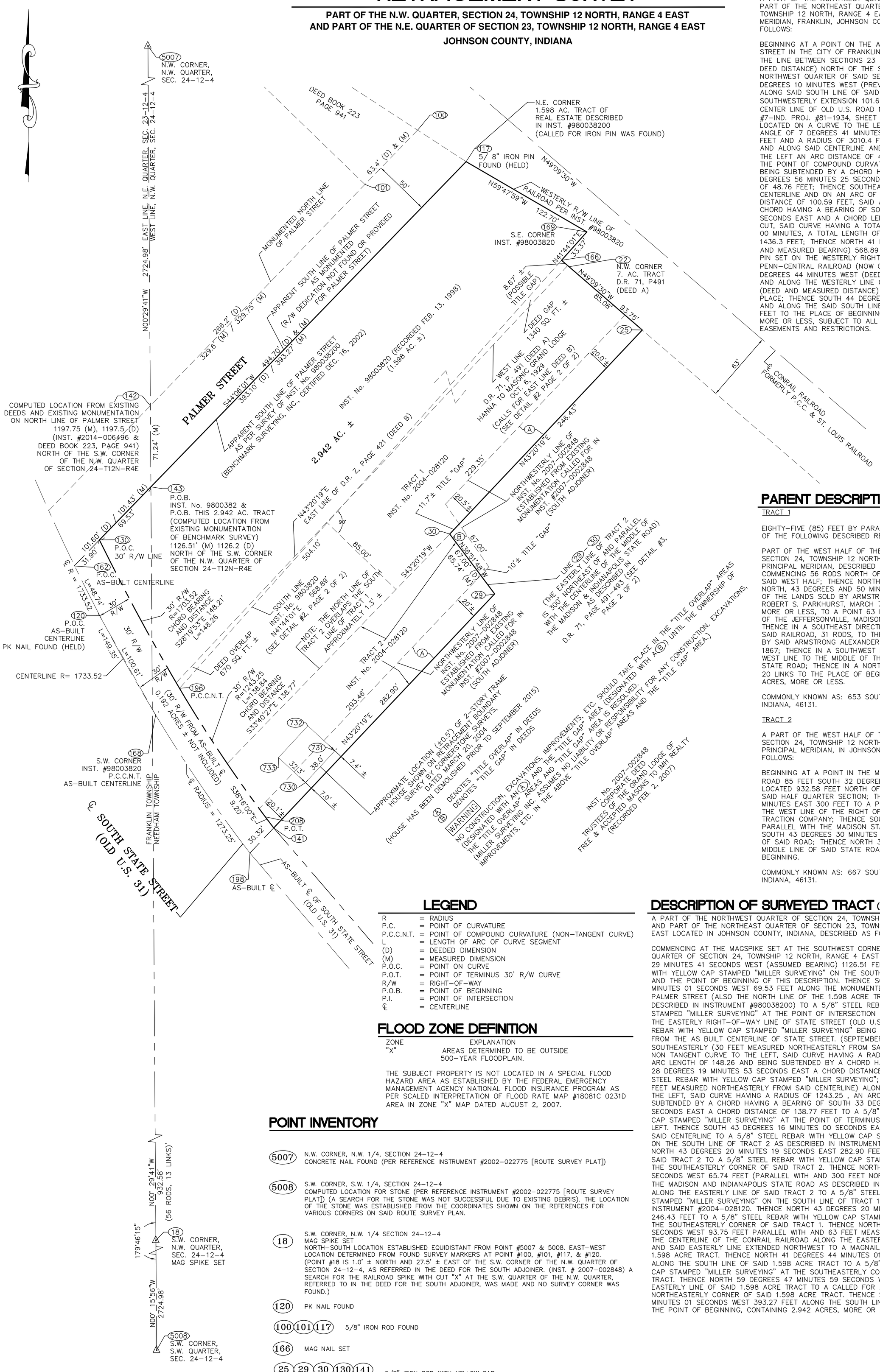

PARENT DESCRIPTION INST. No. 98003820

A PART OF THE NORTHWEST QUARTER OF SECTION 24, AND A PART OF THE NORTHEAST QUARTER OF SECTION 23, ALL IN TOWNSHIP 12 NORTH, RANGE 4 EAST OF THE SECOND PRINCIPAL MERIDIAN, FRANKLIN, JOHNSON COUNTY, INDIANA, DESCRIBED AS FOLLOWS:

BEGINNING AT A POINT ON THE APPARENT SOUTH LINE OF PALMER STREET IN THE CITY OF FRANKLIN, INDIANA, SAID POINT BEING ON THE LINE BETWEEN SECTIONS 23 AND 24, 1126.2 FEET (PREVIOUS DEED DISTANCE) NORTH OF THE SOUTHWEST CORNER OF THE NORTHWEST QUARTER OF SAID SECTION 24; THENCE SOUTH 44 DEGREES 10 MINUTES WEST (PREVIOUS DEED BEARING) ON AND ALONG SAID SOUTH LINE OF SAID PALMER STREET AND ITS SOUTHWESTERLY EXTENSION 101.60 FEET TO AN "X" CUT IN THE CENTER LINE OF OLD U.S. ROAD NO. 31, (FEDERAL ROAD DISTRICT #7–IND. PROJ. #81–1934, SHEET 4 OF 32), SAID POINT BEING LOCATED ON A CURVE TO THE LEFT, WHICH HAS A TOTAL DELTA ANGLE OF 7 DEGREES 41 MINUTES, A TOTAL LENGTH OF 404.4 FEET AND A RADIUS OF 3010.4 FEET; THENCE SOUTHEASTERLY ON AND ALONG SAID CENTERLINE AND ON AN ARC OF SAID CURVE TO THE LEFT AN ARC DISTANCE OF 48.76 FEET TO AN "X" CUT AT THE POINT OF COMPOUND CURVATURE OF SAID CURVE, SAID ARC BEING SUBTENDED BY A CHORD HAVING A BEARING OF SOUTH 26 DEGREES 56 MINUTES 25 SECONDS EAST AND A CHORD LENGTH OF 48.76 FEET; THENCE SOUTHEASTERLY ON AND ALONG SAID CENTERLINE AND ON AN ARC OF A CURVE TO THE LEFT, AN ARC DISTANCE OF 100.59 FEET, SAID ARC BEING SUBTENDED BY A CHORD HAVING A BEARING OF SOUTH 29 DEGREES 24 MINUTES 30 SECONDS EAST AND A CHORD LENGTH OF 100.57 FEET TO AN "X" CUT, SAID CURVE HAVING A TOTAL DELTA ANGLE OF 11 DEGREES 00 MINUTES, A TOTAL LENGTH OF 275.8 FEET, AND A RADIUS OF 1436.3 FEET; THENCE NORTH 41 DEGREES 48 MINUTES EAST (DEED AND MEASURED BEARING) 568.89 FEET (MEASURED) TO AN IRON PIN SET ON THE WESTERLY RIGHT–OF–WAY OF THE FORMER PENN–CENTRAL RAILROAD (NOW CONRAIL); THENCE NORTH 59 DEGREES 44 MINUTES WEST (DEED AND MEASURED BEARING) ON AND ALONG THE WESTERLY LINE OF SAID RAILROAD 122.70 FEET (DEED AND MEASURED DISTANCE) TO AN IRON PIN FOUND IN PLACE; THENCE SOUTH 44 DEGREES 10 MINUTES WEST AND ON AND ALONG THE SAID SOUTH LINE OF PALMER STREET 393.10 FEET TO THE PLACE OF BEGINNING, CONTAINING 1.598 ACRES, MORE OR LESS, SUBJECT TO ALL LEGAL RIGHTS–OF–WAY, EASEMENTS AND RESTRICTIONS.

PARENT DESCRIPTION INST. No. 2004-028120

TRACT 1

EIGHTY–FIVE (85) FEET BY PARALLEL LINES OFF THE NORTH END OF THE FOLLOWING DESCRIBED REAL ESTATE, TO–WIT:

PART OF THE WEST HALF OF THE NORTHWEST QUARTER OF SECTION 24, TOWNSHIP 12 NORTH, RANGE 4 EAST OF THE SECOND PRINCIPAL MERIDIAN, DESCRIBED AS FOLLOWS, TO–WIT: COMMENCING 56 RODS NORTH OF THE SOUTHWEST CORNER OF SAID WEST HALF; THENCE NORTH 1 ROD AND 12 LINKS; THENCE NORTH, 43 DEGREES AND 50 MINUTES EAST, WITH THE EAST LINE OF THE LANDS SOLD BY ARMSTRONG ALEXANDER AND WIFE TO ROBERT S. PARKHURST, MARCH 7, 1867, 31 RODS AND 12 LINKS, MORE OR LESS, TO A POINT 63 FEET SOUTHWEST OF THE MIDDLE OF THE JEFFERSONVILLE, MADISON AND INDIANAPOLIS RAILROAD; THENCE IN A SOUTHEAST DIRECTION PARALLEL TO THE MIDDLE OF SAID RAILROAD, 31 RODS, TO THE WEST LINE OF THE LAND SOLD BY SAID ARMSTRONG ALEXANDER TO WILLIAM OWENS, MARCH 25, 1867; THENCE IN A SOUTHWEST DIRECTION WITH SAID OWENS' WEST LINE TO THE MIDDLE OF THE MADISON AND INDIANAPOLIS STATE ROAD; THENCE IN A NORTHWEST DIRECTION 31 RODS AND 20 LINKS TO THE PLACE OF BEGINNING, CONTAINING SEVEN (7) ACRES, MORE OR LESS.

COMMONLY KNOWN AS: 653 SOUTH STATE STREET, FRANKLIN, INDIANA, 46131.

TRACT 2

A PART OF THE WEST HALF OF THE NORTHWEST QUARTER OF SECTION 24, TOWNSHIP 12 NORTH, RANGE 4 EAST OF THE SECOND PRINCIPAL MERIDIAN, IN JOHNSON COUNTY, INDIANA, DESCRIBED AS FOLLOWS:

BEGINNING AT A POINT IN THE MIDDLE OF THE MADISON STATE ROAD 85 FEET SOUTH 32 DEGREES EAST OF A STONE MARKED "S" LOCATED 932.58 FEET NORTH OF THE SOUTHWEST CORNER OF THE SAID HALF QUARTER SECTION; THENCE NORTH 43 DEGREES 30 MINUTES EAST 300 FEET TO A POINT 229 FEET SOUTHWEST OF THE WEST LINE OF THE RIGHT OF WAY OF THE INTERSTATE TRACTION COMPANY; THENCE SOUTH 32 DEGREES EAST AND PARALLEL WITH THE MADISON STATE ROAD 67 FEET; THENCE SOUTH 43 DEGREES 30 MINUTES WEST 300 FEET TO THE MIDDLE OF SAID ROAD; THENCE NORTH 32 DEGREES WEST WITH THE SAID MIDDLE LINE OF SAID STATE ROAD, 67 FEET TO THE PLACE OF BEGINNING.

COMMONLY KNOWN AS: 667 SOUTH STATE STREET, FRANKLIN, INDIANA, 46131.

LEGEND

R	=	RADIUS
P.C.	=	POINT OF CURVATURE
P.C.C.N.T.	=	POINT OF COMPOUND CURVATURE (NON–TANGENT CURVE)
L	=	LENGTH OF ARC OF CURVE SEGMENT
(D)	=	DEEDED DIMENSION
(M)	=	MEASURED DIMENSION
P.O.C.	=	POINT ON CURVE
P.O.T.	=	POINT OF TERMINUS 30' R/W CURVE
R/W	=	RIGHT–OF–WAY
P.O.B.	=	POINT OF BEGINNING
P.I.	=	POINT OF INTERSECTION
℄	=	CENTERLINE

FLOOD ZONE DEFINITION

ZONE	EXPLANATION
"X"	AREAS DETERMINED TO BE OUTSIDE 500–YEAR FLOODPLAIN.

THE SUBJECT PROPERTY IS NOT LOCATED IN A SPECIAL FLOOD HAZARD AREA AS ESTABLISHED BY THE FEDERAL EMERGENCY MANAGEMENT AGENCY NATIONAL FLOOD INSURANCE PROGRAM AS PER SCALED INTERPRETATION OF FLOOD RATE MAP #18081C 0231D AREA IN ZONE "X" MAP DATED AUGUST 2, 2007.

DESCRIPTION OF SURVEYED TRACT (2.942 ACRES, MORE OR LESS)

A PART OF THE NORTHWEST QUARTER OF SECTION 24, TOWNSHIP 12 NORTH, RANGE 4 EAST AND PART OF THE NORTHEAST QUARTER OF SECTION 23, TOWNSHIP 12 NORTH, RANGE 4 EAST LOCATED IN JOHNSON COUNTY, INDIANA, DESCRIBED AS FOLLOWS:

COMMENCING AT THE MAGSPIKE SET AT THE SOUTHWEST CORNER OF THE NORTHWEST QUARTER OF SECTION 24, TOWNSHIP 12 NORTH, RANGE 4 EAST THENCE NORTH 00 DEGREES 29 MINUTES 41 SECONDS WEST (ASSUMED BEARING) 1126.51 FEET TO A 5/8" STEEL REBAR WITH YELLOW CAP STAMPED "MILLER SURVEYING" ON THE SOUTH LINE OF PALMER STREET AND THE POINT OF BEGINNING OF THIS DESCRIPTION. THENCE SOUTH 44 DEGREES 06 MINUTES 01 SECONDS WEST 69.53 FEET ALONG THE MONUMENTED SOUTH LINE OF SAID PALMER STREET (ALSO THE NORTH LINE OF THE 1.598 ACRE TRACT OF REAL ESTATE DESCRIBED IN INSTRUMENT #980038200) TO A 5/8" STEEL REBAR WITH YELLOW CAP STAMPED "MILLER SURVEYING" AT THE POINT OF INTERSECTION OF SAID SOUTH LINE AND THE EASTERLY RIGHT–OF–WAY LINE OF STATE STREET (OLD U.S. 31) SAID 5/8" STEEL REBAR WITH YELLOW CAP STAMPED "MILLER SURVEYING" BEING 30 FEET MEASURED RADIALLY FROM THE AS BUILT CENTERLINE OF STATE STREET. (SEPTEMBER 2015). THENCE SOUTHEASTERLY (30 FEET MEASURED NORTHEASTERLY FROM SAID CENTERLINE) ALONG A NON TANGENT CURVE TO THE LEFT, SAID CURVE HAVING A RADIUS OF 1703.52 FEET, AN ARC LENGTH OF 148.26 AND BEING SUBTENDED BY A CHORD HAVING A BEARING OF SOUTH 28 DEGREES 19 MINUTES 53 SECONDS EAST A CHORD DISTANCE OF 148.21 FEET TO A 5/8" STEEL REBAR WITH YELLOW CAP STAMPED "MILLER SURVEYING"; THENCE SOUTHEASTERLY (30 FEET MEASURED NORTHEASTERLY FROM SAID CENTERLINE) ALONG A NON TANGENT CURVE TO THE LEFT, SAID CURVE HAVING A RADIUS OF 1243.25 , AN ARC LENGTH OF 138.84 FEET SUBTENDED BY A CHORD HAVING A BEARING OF SOUTH 33 DEGREES 40 MINUTES 27 SECONDS EAST A CHORD DISTANCE OF 138.77 FEET TO A 5/8" STEEL REBAR WITH YELLOW CAP STAMPED "MILLER SURVEYING" AT THE POINT OF TERMINUS OF SAID CURVE TO THE LEFT. THENCE SOUTH 43 DEGREES 16 MINUTES 00 SECONDS EAST 9.20 FEET PARALLEL WITH SAID CENTERLINE TO A 5/8" STEEL REBAR WITH YELLOW CAP STAMPED "MILLER SURVEYING" ON THE SOUTH LINE OF TRACT 2 AS DESCRIBED IN INSTRUMENT #2004–028120; THENCE NORTH 43 DEGREES 20 MINUTES 19 SECONDS EAST 282.90 FEET ALONG THE SOUTH LINE OF SAID TRACT 2 TO A 5/8" STEEL REBAR WITH YELLOW CAP STAMPED "MILLER SURVEYING" AT THE SOUTHEASTERLY CORNER OF SAID TRACT 2. THENCE NORTH 36 DEGREES 51 MINUTES 48 SECONDS WEST 65.74 FEET (PARALLEL WITH AND 300 FEET NORTHEAST OF THE MIDDLE OF THE MADISON AND INDIANAPOLIS STATE ROAD AS DESCRIBED IN D.R. 71, P.491–493) AND ALONG THE EASTERLY LINE OF SAID TRACT 2 TO A 5/8" STEEL REBAR WITH YELLOW CAP STAMPED "MILLER SURVEYING" ON THE SOUTH LINE OF TRACT 1 AS DESCRIBED IN INSTRUMENT #2004–028120. THENCE NORTH 43 DEGREES 20 MINUTES 19 SECONDS EAST 246.43 FEET TO A 5/8" STEEL REBAR WITH YELLOW CAP STAMPED "MILLER SURVEYING" AT THE SOUTHEASTERLY CORNER OF SAID TRACT 1. THENCE NORTH 49 DEGREES 09 MINUTES 30 SECONDS WEST 93.75 FEET PARALLEL WITH AND 63 FEET MEASURED SOUTHWESTERLY FROM THE CENTERLINE OF THE CONRAIL RAILROAD ALONG THE EASTERLY LINE OF SAID TRACT 1 AND SAID EASTERLY LINE EXTENDED NORTHWEST TO A MAGNAIL ON THE SOUTH LINE OF SAID 1.598 ACRE TRACT. THENCE NORTH 41 DEGREES 44 MINUTES 01 SECONDS EAST 33.37 FEET ALONG THE SOUTH LINE OF SAID 1.598 ACRE TRACT TO A 5/8" STEEL REBAR WITH YELLOW CAP STAMPED "MILLER SURVEYING" AT THE SOUTHEASTERLY CORNER OF SAID 1.598 ACRE TRACT. THENCE NORTH 59 DEGREES 47 MINUTES 59 SECONDS WEST 122.70 FEET ALONG THE EASTERLY LINE OF SAID 1.598 ACRE TRACT TO A CALLED FOR AND FOUND IRON PIN AT THE NORTHEASTERLY CORNER OF SAID 1.598 ACRE TRACT. THENCE SOUTH 44 DEGREES 06 MINUTES 01 SECONDS WEST 393.27 FEET ALONG THE SOUTH LINE OF PALMER STREET TO THE POINT OF BEGINNING, CONTAINING 2.942 ACRES, MORE OR LESS.

POINT INVENTORY

5007 N.W. CORNER, N.W. 1/4, SECTION 24–12–4
CONCRETE NAIL FOUND (PER REFERENCE INSTRUMENT #2002–022775 [ROUTE SURVEY PLAT])

5008 S.W. CORNER, S.W. 1/4, SECTION 24–12–4
COMPUTED LOCATION FOR STONE (PER REFERENCE INSTRUMENT #2002–022775 [ROUTE SURVEY PLAT]) (A SEARCH FOR THE STONE WAS NOT SUCCESSFUL DUE TO EXISTING DEBRIS). THE LOCATION OF THE STONE WAS ESTABLISHED FROM THE COORDINATES SHOWN ON THE REFERENCES FOR VARIOUS CORNERS ON SAID ROUTE SURVEY PLAN.

18 S.W. CORNER, N.W. 1/4 SECTION 24–12–4
MAG SPIKE SET
NORTH–SOUTH LOCATION ESTABLISHED EQUIDISTANT FROM POINT #5007 & 5008. EAST–WEST LOCATION DETERMINED FROM FOUND SURVEY MARKERS AT POINT #100, #101, #117, & #120. (POINT #18 IS 1.0' ± NORTH AND 27.5' ± EAST OF THE S.W. CORNER OF THE N.W. QUARTER OF SECTION 24–12–4, AS REFERRED IN THE DEED FOR THE SOUTH ADJOINER. (INST. # 2007–002848) A SEARCH FOR THE RAILROAD SPIKE WITH CUT "X" AT THE S.W. QUARTER OF THE N.W. QUARTER, REFERRED TO IN THE DEED FOR THE SOUTH ADJOINER, WAS MADE AND NO SURVEY CORNER WAS FOUND.)

120 PK NAIL FOUND

100 101 117 5/8" IRON ROD FOUND

166 MAG NAIL SET

25 29 30 130 141 143 169 196 208 5/8" IRON ROD WITH YELLOW CAP STAMPED "MILLER SURVEYING" SET

SHEET 1 OF 2

THE WITHIN PLAT AND SURVEY WAS PREPARED WITHOUT THE BENEFIT OF A CURRENT TITLE POLICY AND ARE THEREFORE SUBJECT TO ANY STATEMENT OF FACTS REVEALED BY EXAMINATION OF SCHEDULE "A" AND SCHEDULE "B" OF A TITLE POLICY.

THIS SURVEY PLAT HAS BEEN PREPARED FOR USE ON THIS PARTICULAR PROJECT AND FOR THE EXCLUSIVE USE OF THE PERSON(S) OR ENTITY HEREON NAMED AND IS NOT CERTIFIED TO OR TO BE USED BY ANY OTHER PARTY. THE EVIDENCE, POSSESSION, OWNERSHIP, CONDITIONS ETC. COULD CHANGE CONSTANTLY AND THE USE OF THIS SURVEY IS LIMITED ONLY TO THE DATE INDICATED HEREIN.

THE LOCATION OF THE TITLE LINES AND CORNERS ARE SUBJECT TO THE EVIDENCE FOUND IN THE PERFORMANCE OF THIS SURVEY. ADDITIONAL EVIDENCE PRESENTED TO MILLER SURVEYING, INC. MAY ALTER THE LOCATION OF THE TITLE LINES AND CORNERS.

GRAPHIC SCALE
0 20 40 80
SCALE : 1" = 40'

REVISIONS

REV. DATE	BY	DESCRIPTION

R.L.S. S0083 DATE: 1/11/2016

MILLER SURVEYING INC.
948 CONNER STREET
NOBLESVILLE INDIANA 46060
PH. # (317) 773–2644 FAX 773–2694

LOCATION: PART OF THE N.W. 1/4, SEC. 24–12–4 AND PART OF THE N.E. 1/4, SEC. 23–12–4 JOHNSON COUNTY, INDIANA	DRAWN BY: LRL	PREPARED BY: LDM
	SCALE: 1" = 40'	FIELD BOOK: D.C.
FIELD WORK COMPLETED: 12/18/2015	DATE: 1/11/2016	PAGE: D.C.
CLIENT: HOMEVIEW CENTER OF FRANKLIN, INC.	JOB NUMBER	SURVEY 4 FILE:
DESCRIPTION: RETRACEMENT SURVEY	B35926	76 STEVE

MISCELLANEOUS DETAILS AND DEEDS

PART OF THE N.W. QUARTER, SECTION 24, TOWNSHIP 12 NORTH, RANGE 4 EAST
AND PART OF THE N.E. QUARTER OF SECTION 23, TOWNSHIP 12 NORTH, RANGE 4 EAST

JOHNSON COUNTY, INDIANA

DETAIL #1
NOT TO SCALE

DETERMINATION OF BOUNDARY BETWEEN D.R. 71, PAGE 491 (DEED A) DATED OCT. 6, 1929 AND D.R. Z, PAGE 421 (DEED B) DATED MARCH 7, 1867

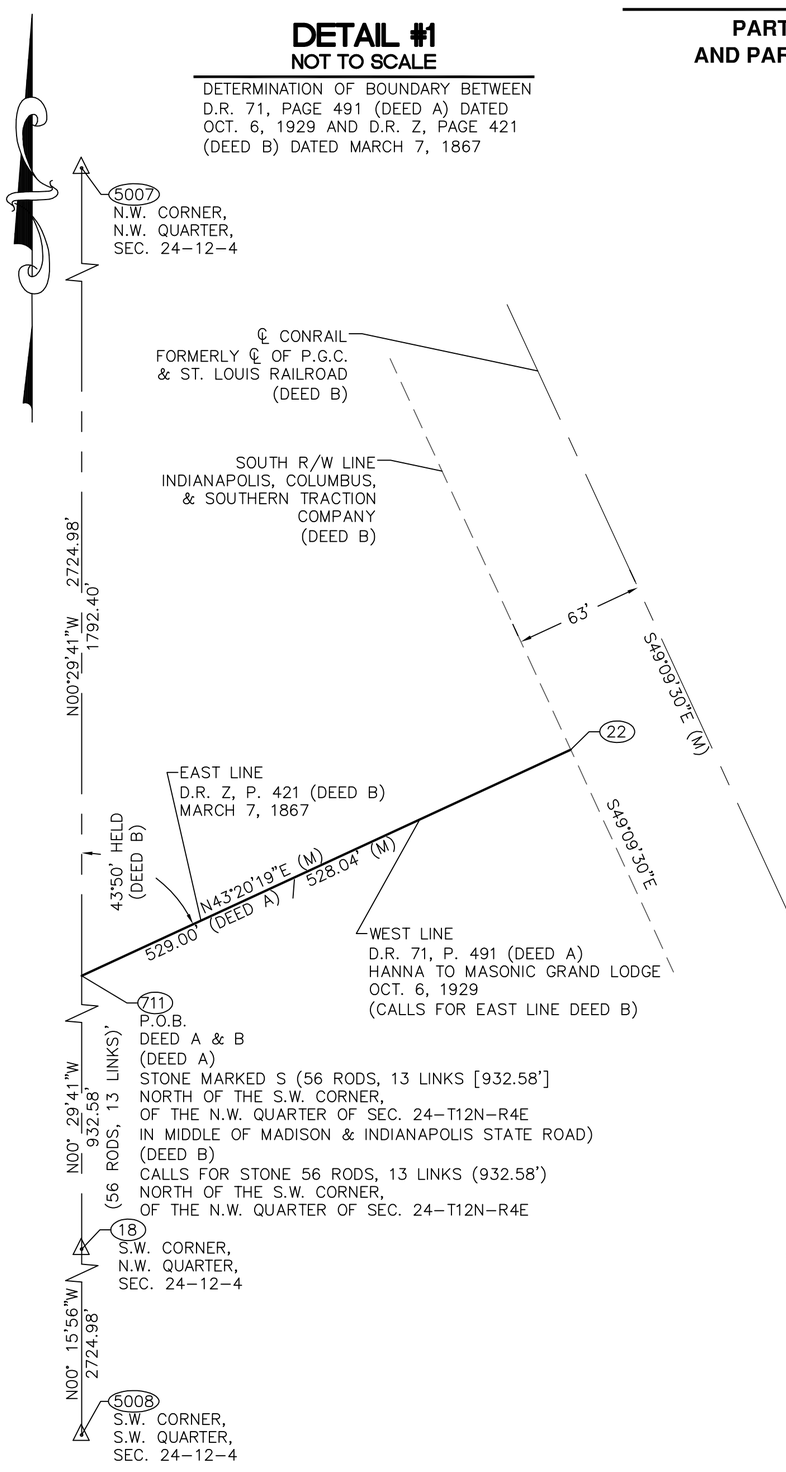

DETAIL #2
NOT TO SCALE

DETAIL OF "DEED OVERLAP" AND "DEED GAP"

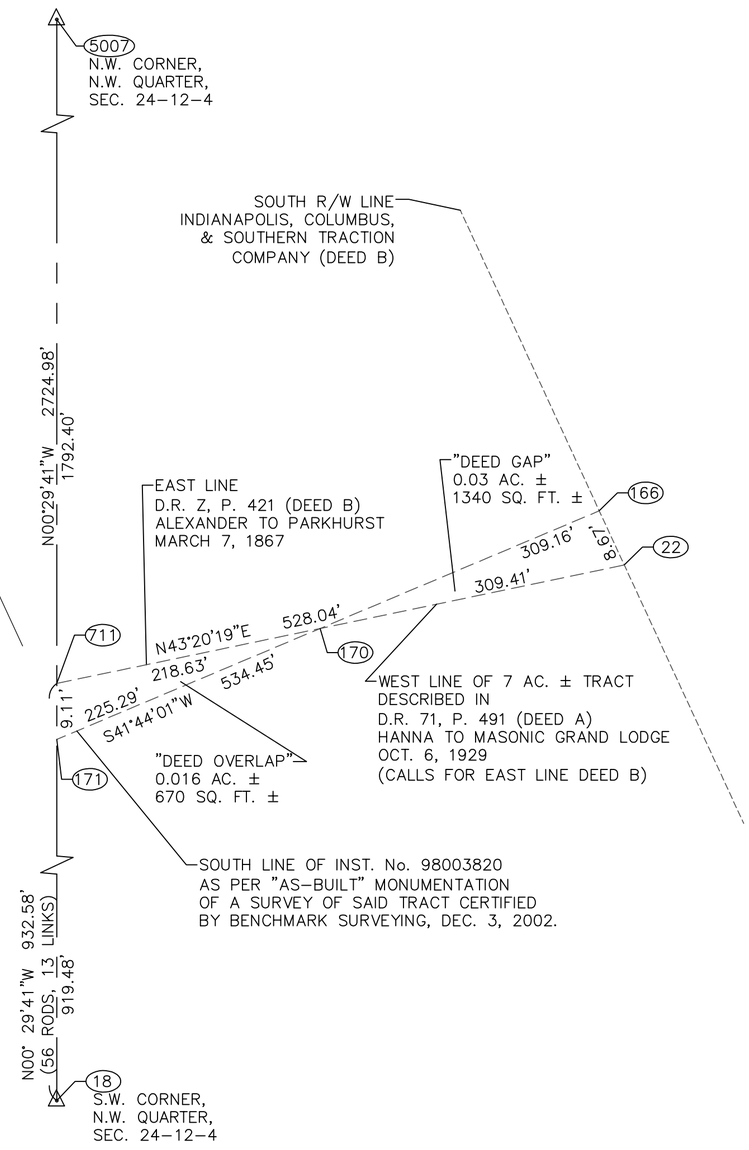

(M) DENOTES MEASURED DIMENSION
(D) DENOTES DEEDED DIMENSION

DETAIL #3
NOT TO SCALE

DETAIL OF 7 ACRE DEED (BEFORE EXCEPTIONS) TO MASONS D.R. 71, PAGE 491–493 OCTOBER 6, 1929 (DEED A)

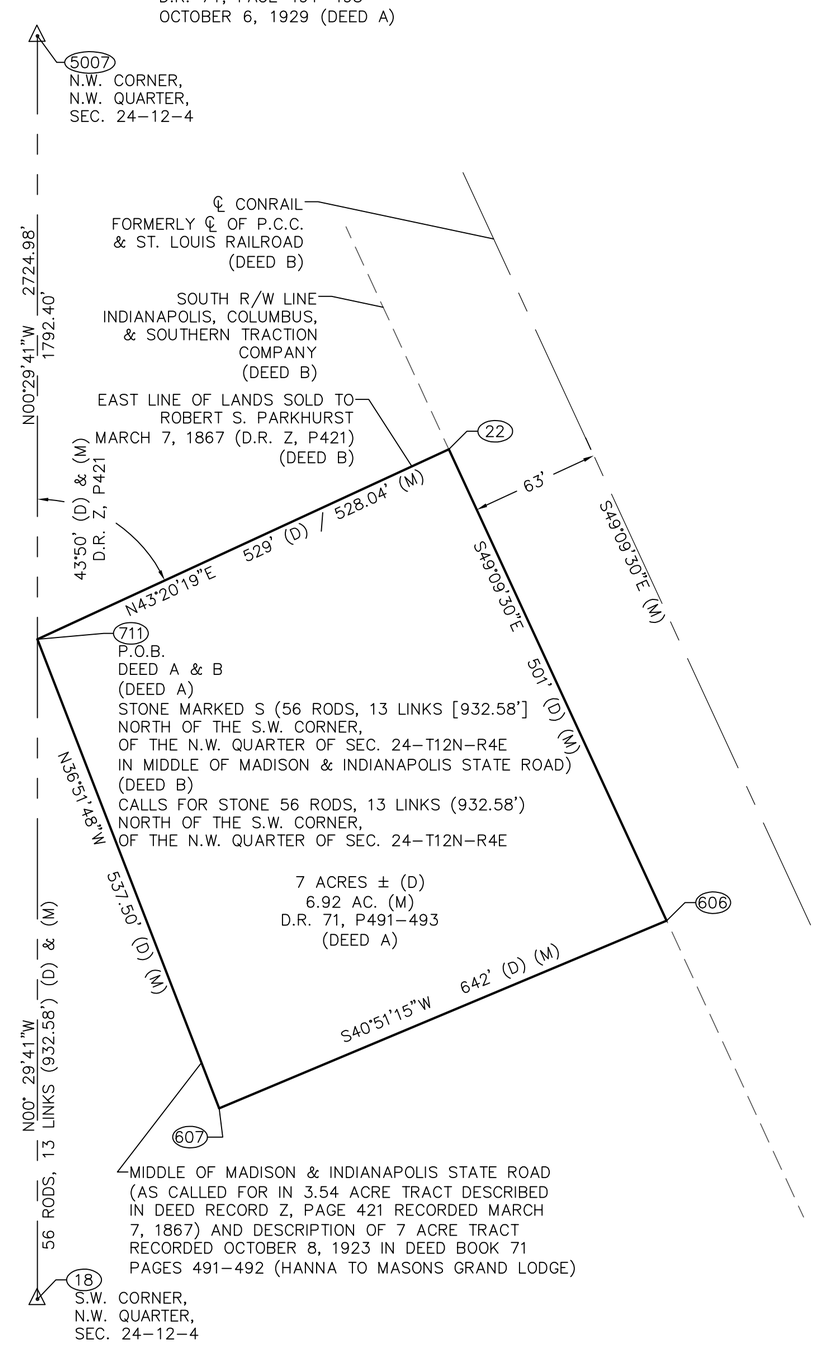

SURVEYOR'S REPORT

IN ACCORDANCE WITH TITLE 865, ARTICLE 1, CHAPTER 12 OF THE INDIANA ADMINISTRATIVE CODE (RULES FOR LAND SURVEYS IN INDIANA), THE FOLLOWING OBSERVATIONS AND OPINIONS ARE SUBMITTED REGARDING THE VARIOUS UNCERTAINTIES IN THE LOCATIONS OF THE LINES AND CORNERS ESTABLISHED THIS SURVEY AS A RESULT OF UNCERTAINTIES IN REFERENCE MONUMENTATION; IN RECORD DESCRIPTIONS AND PLATS; IN LINES OF OCCUPATION; AND AS INTRODUCED BY RANDOM ERRORS IN MEASUREMENT ("RELATIVE POSITIONAL ACCURACY"). THERE MAY BE UNWRITTEN RIGHTS ASSOCIATED WITH THESE UNCERTAINTIES. THE CLIENT SHOULD ASSUME THERE IS AN AMOUNT OF UNCERTAINTY ALONG ANY LINE EQUAL IN MAGNITUDE TO THE DISCREPANCY IN THE LOCATION OF THE LINES OF POSSESSION FROM THE SURVEYED LINES.

THERE MAY BE DIFFERENCES OF DEED DIMENSIONS VERSUS MEASURED DIMENSIONS ALONG THE BOUNDARY LINES SHOWN HEREON AND LIKEWISE, THERE MAY BE FOUND SURVEY MARKERS NEAR, BUT NOT PRECISELY AT, SOME BOUNDARY CORNERS. IN CASES WHERE THE MAGNITUDE OF THESE DIFFERENCES ARE LESS THAN THE RELATIVE POSITIONAL ACCURACY AND LESS THAN THE UNCERTAINTY IDENTIFIED FOR THE REFERENCE MONUMENTATION (DISCUSSED BELOW), THE DIFFERENCES MAY BE CONSIDERED INSIGNIFICANT AND ARE SHOWN ONLY FOR PURPOSES OF MATHEMATICAL CLOSURE. SUCH DIFFERENCES THAT ARE GREATER THAN THE RELATIVE POSITIONAL ACCURACY AND THE UNCERTAINTY IN REFERENCE MONUMENTATION SHOULD BE CONSIDERED WORTHY OF NOTICE AND ARE THEREFORE DISCUSSED FURTHER BELOW.

THIS SURVEY AND REPORT ARE BASED IN PART UPON OPINIONS FORMED IN ACCORDANCE WITH AN INDIANA LAND SURVEYOR'S RESPONSIBILITY TO CONDUCT A SURVEY IN ACCORDANCE WITH "LAW OR A PRECEDENT" (865 IAC 1–12–11(5), RULES OF THE INDIANA STATE BOARD OF REGISTRATION FOR LAND SURVEYORS). SINCE INDIANA HAS NO STATUTES ADDRESSING HOW TO RESOLVE BOUNDARY LINES, A SOLUTION BASED ON PRINCIPLES DERIVED FROM COMMON LAW PRECEDENT MUST BE RELIED UPON AS THE BASIS FOR A BOUNDARY RESOLUTION. UNLESS OTHERWISE NOTED OR DEPICTED HEREON, THERE IS NO EVIDENCE OF OCCUPATION ALONG THE PERIMETER LINES OF THE SUBJECT TRACT. ALL SURVEY MONUMENTS SET OR FOUND THIS SURVEY ARE FLUSH WITH EXISTING GRADE UNLESS OTHERWISE NOTED.

THE RELATIVE POSITIONAL ACCURACY (DUE TO RANDOM ERRORS IN MEASUREMENT) OF THE CORNERS OF THE SUBJECT TRACT ESTABLISHED THIS SURVEY DOES NOT EXCEED THAT ALLOWABLE FOR A RURAL CLASS SURVEY (0.26 FEET PLUS 200 PPM) AS DEFINED IN IAC 865.

THE WITHIN SURVEY IS A RETRACEMENT SURVEY OF THE PORTION OF THE TRACT OF REAL ESTATE DESCRIBED IN INSTRUMENT #98003820 AND TRACT 1 & TRACT 2 DESCRIBED IN INSTRUMENT #2004–028120 NORTHEAST OF THE ASBUILT CENTERLINE OF SOUTH STATE STREET (OLD U.S. 31) WITH THE EXCEPTION OF A PROPOSED 30' R/W NORTHEAST OF THE ASBUILT CENTERLINE OF SAID STREET.

BASIS OF BEARING: ASSUMED BEARING

CONTROLLING MONUMENTS:

- (5007) N.W. CORNER, N.W. 1/4, SECTION 24–12–4 CONCRETE NAIL FOUND (PER REFERENCE INSTRUMENT #2002–022775 [ROUTE SURVEY PLAT])
- (5008) S.W. CORNER, S.W. 1/4, SECTION 24–12–4 COMPUTED LOCATION (PER REFERENCE INSTRUMENT #2002–022775 [ROUTE SURVEY PLAT])
- (18) S.W. CORNER, N.W. 1/4 SECTION 24–12–4 NORTH–SOUTH LOCATION ESTABLISHED EQUIDISTANT FROM POINT #5007 & 5008. EAST–WEST LOCATION DETERMINED FROM FOUND SURVEY MARKERS AT POINT #100, #101, #117, & #120. (MAG SPIKE SET AT POINT #18)
- (120) PK NAIL FOUND (100)(101)(117) 5/8" IRON ROD FOUND

IN MY OPINION, THERE IS 1.5 FEET OF UNCERTAINTY IN THE LOCATION OF THESE MONUMENTS.

1. POSSESSION TO THE NORTHWEST IS THE IMPROVEMENTS OF PALMER STREET.
   POSSESSION TO THE NORTHEAST IS THE RAILROAD IMPROVEMENTS.
   POSSESSION TO THE SOUTHWEST IS THE IMPROVEMENTS OF SOUTH STATE STREET.
   NO EVIDENCE OF POSSESSION WAS FOUND TO THE SOUTHEAST.

TWO POSSIBLE "TITLE OVERLAPS" AND ONE POSSIBLE "TITLE GAP" EXIST ADJACENT TO THE BOUNDARY WITH THE SOUTH ADJOINER (INSTRUMENT #2007–002848).

THE DEED FOR THE SOUTH ADJOINER (INSTRUMENT #2007–002848) CALLS FOR THE NORTHWEST CORNEROF A 7 ACRE TRACT OF REAL ESTATE DESCRIBED IN DEED RECORD 71 PAGE 491 (RECORDED OCTOBER 6, 1929) AND STATES THE CORNER IS ON THE WEST LINE OF THE SOUTHWEST CORNER OF SECTION 24–12–4 AND 945.83 FEET NORTH OF THE SOUTHWEST CORNER OF SAID NORTHWEST QUARTER AND ON THE CENTERLINE OF SOUTH STATE STREET AS LOCATED IN THE PLAN FOR U.S. HIGHWAY 31 DATED 1934.

THE NORTHWEST QUARTER OF THE REFERRED TO 7 ACRE TRACT DESCRIBED IN DEED RECORD 71 PAGE 491 CALLS FOR A STONE MARKED PLANTED IN THE CENTERLINE OF THE MADISON AND INDIANAPOLIS STATE ROAD AT A POINT 56 RODS 13 LINKS (932.58') NORTH OF THE SOUTHWEST CORNER OF THE NORTHWEST QUARTER. (A DIFFERENCE OF 13.25')

DEED RECORD 71 PAGE 491 REFERS TO THE EAST LINE OF DEED RECORD Z PAGE 421 (RECORDED MARCH 7, 1867) WHICH CALLS FOR BEGINNING AT A PLANTED STONE 56 RODS 13 LINKS (932.58') NORTH OF THE SOUTHWEST CORNER OF THE NORTHWEST CORNER OF SECTION 24–12–4.

THIS SURVEY RECOGNIZES THE CALLED FOR 56 RODS 13 LINKS (932.58') DISTANCE CALLED FOR IN THE MARCH 7, 1867 DEED (DEED RECORD Z PAGE 421) AND THE 56 RODS 13 LINKS (932.58') DISTANCE CALLED FOR IN THE OCTOBER 8, 1923 DEED (DEED BOOK 71 PAGES 491–492) TO THE NORTHWEST CORNER OF A 7 ACRE TRACT. THE DEED FOR THE SOUTH ADJOINER REFERS TO A DISTANCE TO THE CENTERLINE OF SOUTH STATE STREET (OLD U.S. 31) AS PER THE 1934 PLANS FOR U.S. 31 (945.83') AS BEING THE DISTANCE TO THE NORTHWEST CORNER OF THE 7 ACRE TRACT. (IT IS MY OWN OPINION THAT THE DISTANCE TO THE NORTHWEST CORNER OF THE 7 ACRE TRACT IN THE CENTERLINE OF A ROAD AS REFERRED IN 1867 AND 1923 DOES NOT MOVE THE LOCATION OF THE NORTHWEST CORNER OF THE 7 ACRE TRACT, WHICH CAUSES OVERLAPS WITH EXISTING DEEDS.

2. THE ACCURACY OF ANY FLOOD HAZARD DATA SHOWN ON THIS REPORT IS SUBJECT TO MAP SCALE UNCERTAINTY AND TO ANY OTHER UNCERTAINTY IN LOCATION OR ELEVATION ON THE REFERENCED FLOOD INSURANCE RATE MAP. THE WITHIN DESCRIBED TRACT OF LAND LIES WITHIN ZONE "X" AS SAID TRACT PLOTS BY SCALE ON COMMUNITY PANEL NUMBER 18081C 0231D OF THE FLOOD INSURANCE RATE MAPS FOR JOHNSON COUNTY, INDIANA (MAPS DATED AUGUST 2, 2007).

3. OWNERSHIP INFORMATION INDICATED HEREON IS AS IDENTIFIED IN COUNTY RECORDS ON 07/20/2015.

4. THE SURVEY HEREIN DOES NOT PURPORT TO SHOW THE WATERSHED AREAS AFFECTING THE SUBJECT PARCELS NOR DOES IT PURPORT TO SHOW THE PRESENCE OR ABSENCE OF ALL REGULATED OR NON–REGULATED DITCHES OR DRAINS.

5. THE WITHIN PLAT AND SURVEY WERE PREPARED WITHOUT BENEFIT OF A CURRENT TITLE POLICY FOR THE SUBJECT TRACT OR THE ADJOINING TRACTS AND ARE THEREFORE SUBJECT TO ANY STATEMENT OF FACTS REVEALED BY EXAMINATION OF SUCH DOCUMENTS.

I AFFIRM, UNDER THE PENALTIES FOR PERJURY, THAT I HAVE TAKEN REASONABLE CARE TO REDACT EACH SOCIAL SECURITY NUMBER IN THE DOCUMENT, UNLESS REQUIRED BY LAW (LELAND D. MILLER).

DEED REFERRED TO IN PARENT DESCRIPTION (DEED BOOK 71, PAGES 491-492) (DEED A)

DESCRIPTION PER DEED BOOK 71, P. 491–492 (WARRANTY DEED RECORDED OCTOBER 8, 1923, AMBROSE M. HANNA AND WIFE DORA A. HANNA TO THE MOST WORSHIPFUL GRAND LODGE OF THE ANCIENT AND HONORABLE FRATERNITY OF FREE AND ACCEPTED MASONS)

A PART OF THE WEST HALF OF THE NORTH WEST QUARTER OF SECTION TWENTY FOUR, IN TOWNSHIP TWELVE NORTH, IN RANGE FOUR EAST, COMMENCING AT A STONE MARKED "S" PLANTED IN THE MIDDLE OF THE MADISON & INDIANAPOLIS STATE ROAD AT A POINT FIFTY SIX RODS AND THIRTEEN LINKS NORTH OF THE SOUTHWEST CORNER OF SAID HALF QUARTER SECTION; THENCE NORTH FORTY THREE DEGREES AND THIRTY MINUTES EAST WITH THE EAST LINE OF THE LANDS SOLD BY ARMSTRONG ALEXANDER TO ROBERT S. PARKHURST BY DEED OF DATE MARCH 7, 1867 AND RECORDED IN DEED RECORD "Z" AT PAGE 421, FIVE HUNDRED TWENTY NINE FEET TO THE SOUTH LINE OF THE RIGHT OF WAY OF THE INDIANAPOLIS, COLUMBUS & SOUTHERN TRACTION COMPANY, WHICH SAID SOUTH LINE IS SIXTY THREE FEET SOUTH WEST OF THE CENTER LINE OF THE MAIN TRACK OF THE PITTSBURGH, CINCINNATI, CHICAGO & ST. LOUIS RAILWAY COMPANY (FORMERLY THE JEFFERSONVILLE, MADISON & INDIANAPOLIS RAILROAD), THENCE IN A SOUTHEAST DIRECTION ALONG AND WITH SAID SOUTH LINE OF SAID TRACTION COMPANY'S RIGHT OF WAY AND PARALLEL TO SAID CENTER LINE OF SAID RAILROAD TRACK FIVE HUNDRED AND ONE FEET TO THE WEST LINE OF THE LANDS SOLD BY ARMSTRONG ALEXANDER TO WILLIAM A. OWENS BY DEED OF DATE MARCH 25, 1867 AND RECORDED IN DEED RECORD "Z" AT PAGE 464; THENCE IN A SOUTHWEST DIRECTION WITH THE WEST LINE OF SAID OWENS' TRACT SIX HUNDRED FORTY TWO FEET TO THE MIDDLE OF SAID STATE ROAD; THENCE IN A NORTHWEST DIRECTION ALONG AND WITH THE MIDDLE OF SAID STATE ROAD FIVE HUNDRED THIRTY SEVEN AND ONE HALF FEET TO STONE "S", THE PLACE OF BEGINNING; CONTAINING SEVEN ACRES, MORE OR LESS;

EXCEPTING THEREFROM THE FOLLOWING DESCRIBED TRACTS OF LAND, TO WIT: (A) BEGINNING AT SAID STONE MARKED "S" AND RUNNING THENCE IN A SOUTHEAST DIRECTION ALONG AND WITH THE MIDDLE OF SAID STATE ROAD ONE HUNDRED FIFTY FOUR AND THREE FOURTHS FEET; THENCE NORTH FORTY THREE DEGREES AND THIRTY MINUTES EAST THREE HUNDRED FEET; THENCE IN A NORTHWEST DIRECTION PARALLEL WITH THE MIDDLE OF SAID STATE ROAD SIXTY SEVEN FEET; THENCE NORTH FORTY THREE DEGREES AND THIRTY MINUTES EAST TWO HUNDRED TWENTY FIVE FEET, MORE OR LESS, TO THE SAID SOUTH LINE OF SAID TRACTION COMPANY'S RIGHT OF WAY; THENCE IN A NORTHWEST DIRECTION PARALLEL TO SAID CENTER LINE OF SAID RAILROAD TRACK AND ALONG AND WITH SAID RIGHT OF WAY LINE EIGHTY FIVE FEET TO THE NORTHWEST CORNER OF THE FIRST ABOVE DESCRIBED SEVEN ACRE TRACT; THENCE IN A SOUTHWEST DIRECTION WITH THE WESTERLY LINE OF SAID FIRST ABOVE DESCRIBED TRACT FIVE HUNDRED TWENTY NINE FEET TO THE PLACE OF BEGINNING; THIS EXCEPTED PARCEL BEING INTENDED TO INCLUDE THE EIGHTY FIVE FOOT STRIP OF LAND CONVEYED BY NANNIE T. DRAKE AND HUSBAND TO DOLPH H. DRAKE BY THEIR DEED OF DATE MARCH 21, 1910 RECORDED IN DEED RECORD NO. 53 AT PAGE 207, AND THE CERTAIN LOT KEPT AND RETAINED BY GRANTORS HEREIN WHICH HAS A FRONTAGE OF SIXTY SEVEN FEET ON SAID STATE ROAD AND EXTENDS BACK THREE HUNDRED FEET FROM THE MIDDLE OF SAID STATE ROAD. (B) SEVENTY TWO FEET OFF OF THE SOUTHEAST SIDE AND PARALLEL TO THE SOUTHEAST LINE OF THE SEVEN ACRE TRACT OF LAND FIRST HEREIN ABOVE DESCRIBED; THIS EXCEPTED PARCEL BEING INTENDED TO INLCUDE THE CERTAIN TRACT OF LAND CONVEYED BY THE GRANTORS HEREIN TO ROY C. BRYANT BY THEIR DEED OF DATE OCTOBER 4, 1919 RECORDED IN DEED RECORD NO. 67 AT PAGE 402.

THE WITHIN PLAT AND SURVEY WAS PREPARED WITHOUT THE BENEFIT OF A CURRENT TITLE POLICY AND ARE THEREFORE SUBJECT TO ANY STATEMENT OF FACTS REVEALED BY EXAMINATION OF SCHEDULE "A" AND SCHEDULE "B" OF A TITLE POLICY.

THIS SURVEY PLAT HAS BEEN PREPARED FOR USE ON THIS PARTICULAR PROJECT AND FOR THE EXCLUSIVE USE OF THE PERSON(S) OR ENTITY HEREON NAMED AND IS NOT CERTIFIED TO OR TO BE USED BY ANY OTHER PARTY. THE EVIDENCE, POSSESSION, OWNERSHIP, CONDITIONS ETC. COULD CHANGE CONSTANTLY AND THE USE OF THIS SURVEY IS LIMITED ONLY TO THE DATE INDICATED HEREIN.

THE LOCATION OF THE TITLE LINES AND CORNERS ARE SUBJECT TO THE EVIDENCE FOUND IN THE PERFORMANCE OF THIS SURVEY. ADDITIONAL EVIDENCE PRESENTED TO MILLER SURVEYING, INC. MAY ALTER THE LOCATION OF THE TITLE LINES AND CORNERS.

DEED REFERRED TO IN PARENT DESCRIPTION (DEED RECORD Z, PAGE 421) (DEED B) (NORTH ADJOINER TO DEED A, COMMON LINE BETWEEN DEED A AND DEED B IS CALLED FOR IN DEED A)

DESCRIPTION PER DEED RECORD Z, PG 421 (ARMSTRONG ALEXANDER AND WIFE CONVEY AND WARRANT TO ROBERT S. PARKHURST, MARCH 7, 1867)

A PART OF THE EAST HALF OF THE NORTHEAST QUARTER OF SECTION TWENTY THREE (23), TOWNSHIP TWELVE (12) NORTH, RANGE FOUR (4) EAST, BEGINNING FIFTY SIX (56) RODS AND THIRTEEN (13) LINKS NORTH OF THE SOUTHEAST CORNER OF SAID TRACK OF LAND AT A STONE PLANTED IN THE MIDDLE OF THE MADISON AND INDIANAPOLIS STATE ROAD THENCE NORTH 25 3/4 DEGREES W TWENTY TWO (22) RODS AND THREE (3) LINKS THENCE NORTH 20 3/4 DEGREES W SIXTEEN (16) RODS AND THIRTEEN (13) LINKS TO THE SOUTH WEST CORNER OF THE LAND SOLD BY THOMAS WILLIAM AND WIFE TO THE JEFFERSONVILLE MADISON AND INDIANAPOLIS RAILROAD ON THE 24 DAY NOVEMBER 1866 THE DEED TO WHICH IS RECORDED IN BOOK Z" PAGE 407 IN THE RECORDERS OFFICE OF JOHNSON COUNTY, INDIANA, THENCE NORTH 69 ½ DEGREES E, TO THE EAST LINE OF SAID HALF QUARTER SECTION; THENCE SOUTH TO THE PLACE OF BEGINNING CONTAINING TWO ACRES AND THREE HUNDREDTHS, MORE OR LESS.

ALSO A PART OF THE WEST HALF OF THE NORTHWEST QUARTER OF SECTION TWENTY FOUR (24) TOWNSHIP TWELVE (12) NORTH RANGE FOUR (4) EAST BEGINNING AT A PLANTED STONE FIFTY SIX (56) RODS AND THIRTEEN (13) LINKS NORTH OF THE SOUTHWEST CORNER OF SAID TRACT OF LAND; THENCE NORTH 43 DEGREES 50 MINUTES EAST THIRTY FIVE (35) RODS AND SEVEN (7) LINKS TO THE MIDDLE OF THE JEFFERSONVILLE MADISON AND INDIANAPOLIS RAILROAD; THENCE IN A NORTHWEST DIRECTION WITH THE MIDDLE OF SAID RAILROAD TWENTY SIX (26) RODS AND TWELVE (12) LINKS TO THE SOUTHEAST CORNER OF THE LAND SOLD BY THOMAS WILLIAMS AND WIFE TO SAID RAILROAD AS HEREIN BEFORE SPECIFIED THENCE S 69 ½ DEGREES W TO THE WEST LINE OF SAID HALF QUARTER SECTION LAST DESCRIBED; THENCE SOUTH TO THE PLACE OF BEGINNING CONTAINING THREE ACRES AND FIFTY FOUR HUNDREDTHS MORE OR LESS.

SOUTH ADJOINER TO SURVEYED TRACT (INSTRUMENT #2007-002848)

PART OF THE NORTHWEST QUARTER OF SECTION 24, TOWNSHIP 12 NORTH, RANGE 04 EAST OF THE SECOND PRINCIPAL MERIDIAN, JOHNSON COUNTY, INDIANA, DESCRIBED AS FOLLOWS:

COMMENCING AT A RAILROAD SPIKE WITH CUT 'X' FOUND AT THE SOUTHWEST CORNER OF THE NORTHWEST QUARTER; THENCE NORTH 00 DEGREES 04 MINUTES 25 SECONDS EAST ALONG THE WEST LINE THEREOF 945.83 FEET TO THE CENTERLINE OF SOUTH STATE STREET (OLD US 31 NRM PROJECT NO 81 SECTION D DATED 1934) AND THE SOUTHWEST CORNER OF THE 7 ACRE TRACT (BEFORE EXCEPTIONS) DESCRIBED IN DEED TO MASONIC GRAND LODGE AND RECORDED IN DEED RECORD 71 PAGE 491–493 (THE FOLLOWING THREE COURSES ALONG SAID LINES); THENCE NORTH 43 DEGREES 30 MINUTES 00 SECONDS EAST 530.93 FEET TO A POINT 63 FEET FROM THE CENTERLINE OF THE MAIN TRACKS; THENCE SOUTH 49 DEGREES 09 MINUTES 17 SECONDS EAST PARALLEL WITH SAID TRACKS 85.00 FEET TO A REBAR/CAP MARKED MAIN STREET SET AT THE POINT OF BEGINNING; THENCE CONTINUING SOUTH 49 DEGREES 09 MINUTES 17 SECONDS EAST PARALLEL WITH SAID TRACKS 570.57 FEET TO THE WEST LINE OF THE LAND DESCRIBED IN A WARRANTY DEED TO ROBERTSON AND RECORDED IN BOOK 243 PAGE 902; THENCE SOUTH 37 DEGREES 19 MINUTES 02 SECONDS WEST ALONG THE WEST LINE THEREOF 477.29 FEET TO A REBAR/CAP MARKED FECO FOUND AT THE CORNER OF THE LAND DESCRIBED IN A CORPORATE DEED TO JOHNSON COUNTY SENIOR CITIZENS, INC RECORDED AS INSTRUMENT NUMER 2002–037121 (THE FOLLOWING TWO COURSES ALONG SAID DEED); THENCE NORTH 52 DEGREES 41 MINUTES 00 SECONDS WEST 70.00 FEET TO A REBAR/CAP MARKED FECO FOUND; THENCE SOUTH 37 DEGREES 19 MINUTES 00 SECONDS WEST 150.00 FEET TO A MAG NAIL SET ON THE 30 FEET HALF RIGHT OF WAY LINE OF SOUTH STATE STREET (OLD US 31 NRM PROJECT NO 81 SECTION D DATED 1934) (THE FOLLOWING THREE COURSES ALONG RIGHT OF WAY LINE) AND ON A NON–TANGENT CURVE HAVING A RADIUS OF 990.63 FEET; THENCE ALONG SAID CURVE TO THE RIGHT AN ARC LENGTH OF 92.28 FEET (CHORD NORTH 41 DEGREES 02 MINUTES 29 SECONDS WEST 92.24 FEET) TO A REBAR/CAP SET MARKED MAIN STREET; THENCE NORTH 38 DEGREES 16 MINUTES 31 SECONDS WEST 402.90 FEET TO A REBAR/CAP SET MARKED MAIN STREET ON A CURVE HAVING A RADIUS OF 1243.25 FEET; THENCE ALONG SAID CURVE TO THE RIGHT AN ARC LENGTH OF 11.90 FEET (CHORD NORTH 38 DEGREES 00 MINUTES 04 SECONDS WEST 11.90 FEET) A REBAR/CAP SET MARKED MAIN STREET ON THE EAST LINE OF LAND DESCRIBED IN WARRANTY DEED TO HARRIS RECORDED IN BOOK 272 PAGE 660 (THE FOLLOWING TWO COURSES ALONG SAID DEED); THENCE NORTH 43 DEGREES 30 MINUTES 00 SECONDS EAST 293.46 FEET TO A REBAR/CAP SET MARKED MAIN STREET; THENCE NORTH 34 DEGREES 38 MINUTES 29 SECONDS WEST 67.00 FEET TO A REBAR/CAP SET MARKED MAIN STREET ON THE EAST LINE OF LAND DESCRIBED IN A WARRANTY DEED TO HARRIS RECORDED IN BOOK 251 PAGE 955 (THE REMAINING COURSE ALONG SAID DEED); THENCE NORTH 43 DEGREES 30 MINUTES 00 SECONDS EAST 229.35 FEET TO THE POINT OF BEGINNING, CONTAINING 7.409 ACRES, MORE OR LESS.

NOTE: ABOVE UNDERLINED SOUTHWEST IS A TYPO AND SHOULD BE NORTHWEST.

GRAPHIC SCALE
0 15 30 60
SCALE : 1" = 30'

REVISIONS

REV. DATE	BY	DESCRIPTION

R.L.S. S0083 DATE: 1/11/2016

MILLER SURVEYING INC.
948 CONNER STREET
NOBLESVILLE INDIANA 46060
PH. # (317) 773–2644 FAX 773–2694

LOCATION: PART OF THE N.W. 1/4, SEC. 24–12–4 AND PART OF THE N.E. 1/4, SEC. 23–12–4 JOHNSON COUNTY, INDIANA	DRAWN BY: LRL	PREPARED BY: LDM
	SCALE: NONE	FIELD BOOK: D.C.
	DATE: 1/11/2016	PAGE: D.C.
FIELD WORK COMPLETED: 12/18/2015	JOB NUMBER	SURVEY 4 FILE:
CLIENT: HOMEVIEW CENTER OF FRANKLIN, INC.	B35926	76 STEVE
DESCRIPTION: RETRACEMENT SURVEY		

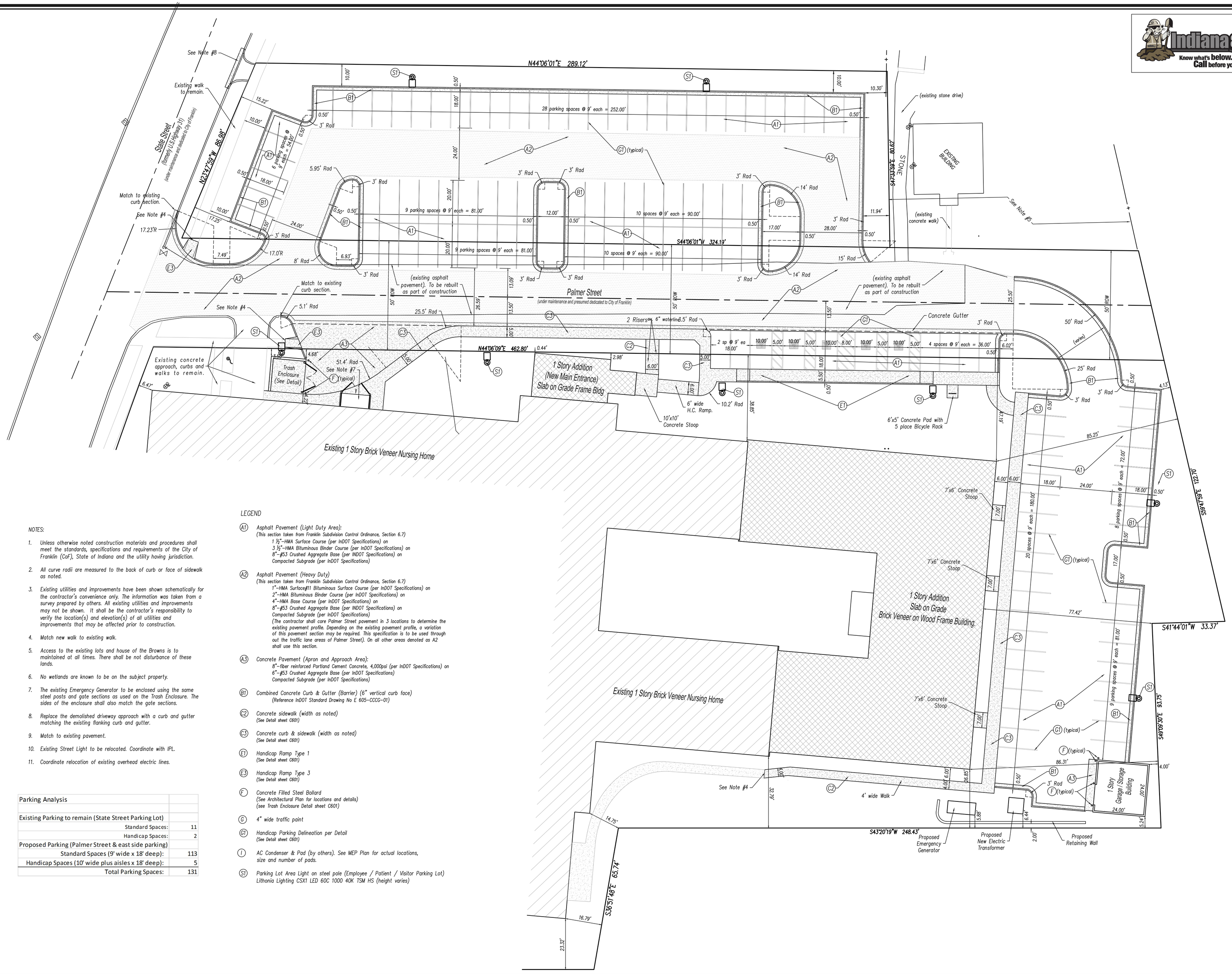

NOTES:

1. Unless otherwise noted construction materials and procedures shall meet the standards, specifications and requirements of the City of Franklin (CoF), State of Indiana and the utility having jurisdiction.
2. All curve radii are measured to the back of curb or face of sidewalk as noted.
3. Existing utilities and improvements have been shown schematically for the contractor's convenience only. The information was taken from a survey prepared by others. All existing utilities and improvements may not be shown. It shall be the contractor's responsibility to verify the location(s) and elevation(s) of all utilities and improvements that may be affected prior to construction.
4. Match new walk to existing walk.
5. Access to the existing lots and house of the Browns is to maintained at all times. There shall be not disturbance of these lands.
6. No wetlands are known to be on the subject property.
7. The existing Emergency Generator to be enclosed using the same steel posts and gate sections as used on the Trash Enclosure. The sides of the enclosure shall also match the gate sections.
8. Replace the demolished driveway approach with a curb and gutter matching the existing flanking curb and gutter.
9. Match to existing pavement.
10. Existing Street Light to be relocated. Coordinate with IPL.
11. Coordinate relocation of existing overhead electric lines.

Parking Analysis	
Existing Parking to remain (State Street Parking Lot)	
Standard Spaces:	11
Handicap Spaces:	2
Proposed Parking (Palmer Street & east side parking)	
Standard Spaces (9' wide x 18' deep):	113
Handicap Spaces (10' wide plus aisles x 18' deep):	5
Total Parking Spaces:	131

LEGEND

(A1) Asphalt Pavement (Light Duty Area):
(This section taken from Franklin Subdivision Control Ordinance, Section 6.7)
1 ½"–HMA Surface Course (per INDOT Specifications) on
3 ½"–HMA Bituminous Binder Course (per INDOT Specifications) on
8"–#53 Crushed Aggregate Base (per INDOT Specifications) on
Compacted Subgrade (per INDOT Specifications)

(A2) Asphalt Pavement (Heavy Duty)
(This section taken from Franklin Subdivision Control Ordinance, Section 6.7)
1"–HMA Surface#11 Bituminous Surface Course (per INDOT Specifications) on
2"–HMA Bituminous Binder Course (per INDOT Specifications) on
4"–HMA Base Course (per INDOT Specifications) on
8"–#53 Crushed Aggregate Base (per INDOT Specifications) on
Compacted Subgrade (per INDOT Specifications)
(The contractor shall core Palmer Street pavement in 3 locations to determine the existing pavement profile. Depending on the existing pavement profile, a variation of this pavement section may be required. This specification is to be used through out the traffic lane areas of Palmer Street). On all other areas denoted as A2 shall use this section.

(A3) Concrete Pavement (Apron and Approach Area):
8"–fiber reinforced Portland Cement Concrete, 4,000psi (per INDOT Specifications) on
6"–#53 Crushed Aggregate Base (per INDOT Specifications)
Compacted Subgrade (per INDOT Specifications)

(B1) Combined Concrete Curb & Gutter (Barrier) (6" vertical curb face)
(Reference INDOT Standard Drawing No E 605–CCCG–01)

(C2) Concrete sidewalk (width as noted)
(See Detail sheet C601)

(C3) Concrete curb & sidewalk (width as noted)
(See Detail sheet C601)

(E1) Handicap Ramp Type 1
(See Detail sheet C601)

(E3) Handicap Ramp Type 3
(See Detail sheet C601)

(F) Concrete Filled Steel Ballard
(See Architectural Plan for locations and details)
(see Trash Enclosure Detail sheet C601)

(G) 4" wide traffic paint

(G1) Handicap Parking Delineation per Detail
(See Detail sheet C601)

(I) AC Condenser & Pad (by others). See MEP Plan for actual locations, size and number of pads.

(S1) Parking Lot Area Light on steel pole (Employee / Patient / Visitor Parking Lot)
Lithonia Lighting CSX1 LED 60C 1000 40K TSM HS (height varies)

Indiana 811
Know what's below. Call before you dig.

North

Scale: 1"= 20'

landfocus CONSULTING
LANDFOCUSCONSULTING.COM
P. O. Box 67, Pendleton, IN 46064
info@landfocusconsulting.com
w 765.778.6240 f 765.778.3371

Client
Homeview Center of Franklin
1800 N. Wabahs Ave
Marion, Indiana 46952
Tel. 765-664-5400

Date 08.19.2016

Revision | Date

Project
Homeview Health & Rehabilitation Center
651 S. State Street
City of Franklin, Johnson County, Indiana

Sheet Title
Site Location Plan

Sheet No.
C201
of 15 Civil Sheets

G:\TLC\Franklin\Building Addition\Final\C201 SLP.dwg, C201 SLP, 8/30/2016 1:52:36 PM

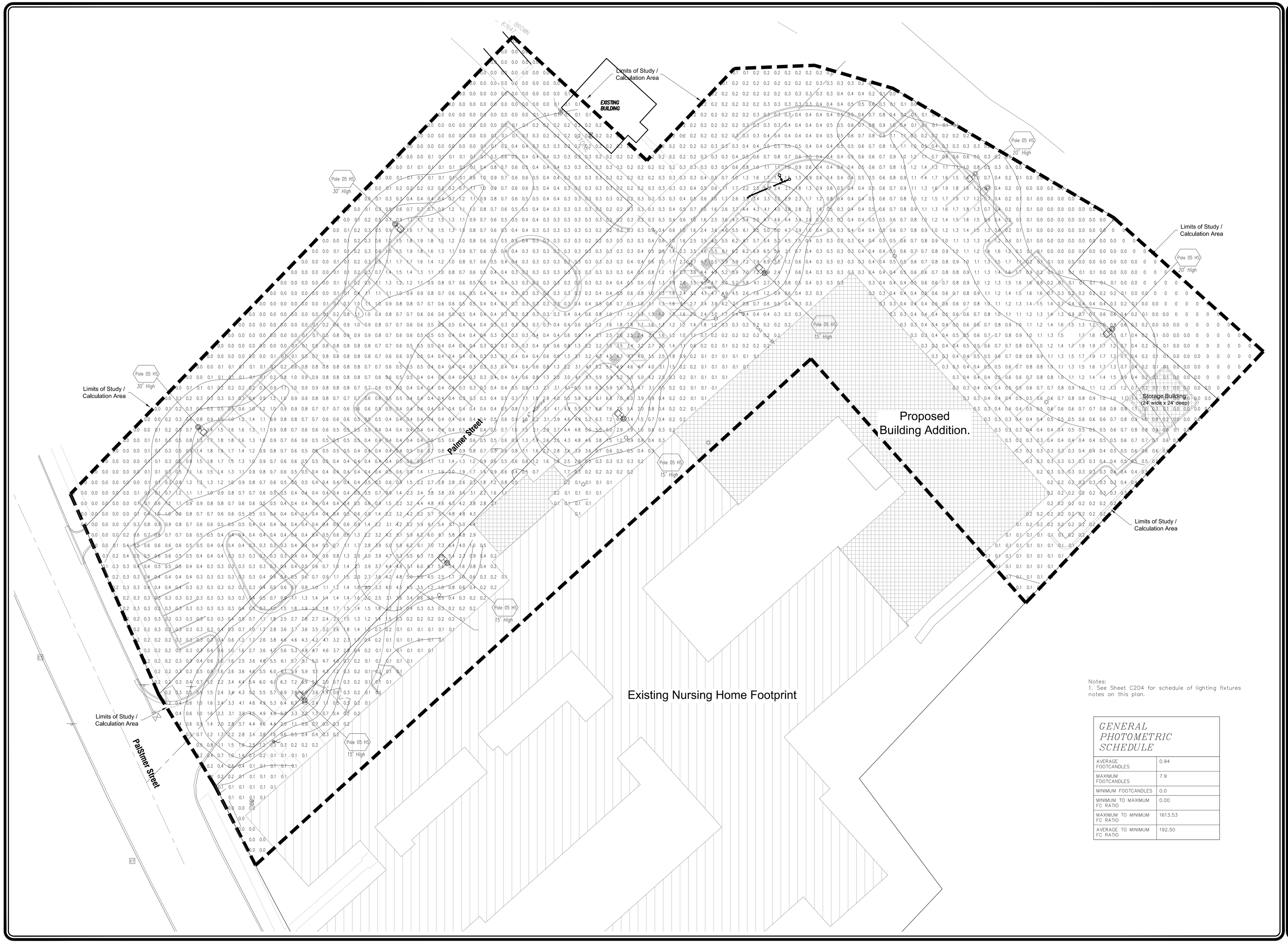

Notes:
1. See Sheet C204 for schedule of lighting fixtures notes on this plan.

GENERAL PHOTOMETRIC SCHEDULE	
AVERAGE FOOTCANDLES	0.94
MAXIMUM FOOTCANDLES	7.9
MINIMUM FOOTCANDLES	0.0
MINIMUM TO MAXIMUM FC RATIO	0.00
MAXIMUM TO MINIMUM FC RATIO	1613.53
AVERAGE TO MINIMUM FC RATIO	192.50

North

Scale: 1"= 20'

landfocus CONSULTING
LANDFOCUSCONSULTING.COM
P. O. Box 67, Pendleton, IN 46064
info@landfocusconsulting.com
w 765.778.4540 f 765.778.3571

Client
Homeview Center of Franklin
1800 N. Wabahs Ave
Marion, Indiana 46952
Tel. 765-664-5400

Date
08.19.2016

Revision

Date

Project
Homeview Health & Rehabilitation Center
651 S. State Street
City of Franklin, Johnson County, Indiana

Sheet Title
Site Photometric Analysis Plan
Showing Light Levels

Sheet No.
C203
of 15
Civil Sheets

G:\TLC\Franklin\Building Addition\Final\C203 SPhotoP.dwg, C203, 8/20/2016 2:44:37 PM

LUMINAIRE SCHEDULE

CALLOUT	SYMBOL	LAMP	BALLAST	MOUNTING	MODEL	VOLTS	NOTE 3	QUANTITY
Pole 05 HS		(1) LED, NICHIA 219B, 4000K	ELECTRONIC	POLE	Lithonia Lighting, CSX1 LED 60C 1000 40K T5M HS	120V 1P 2W	/26/2013 2/25/2016 ACUITY BRANDS LIGHTING CONYERS LAB IES LM-79-08 CONTOUR SERIES LED AREA LUMINAIRE WITH 60 4000K LEDS OPERATED AT 1000mA AND PRECISION MOLDED ACRYLIC TYPE V LENS WITH HOUSE SIDE SHIELD TYPE IV, SHORT, BUG RATING: B1 – U0 – G3 13961.8 0 , 0 LED 209 ARM CSX1-LED 5076dd63-9c03-443c-bc63-4210b2f8f68e	8

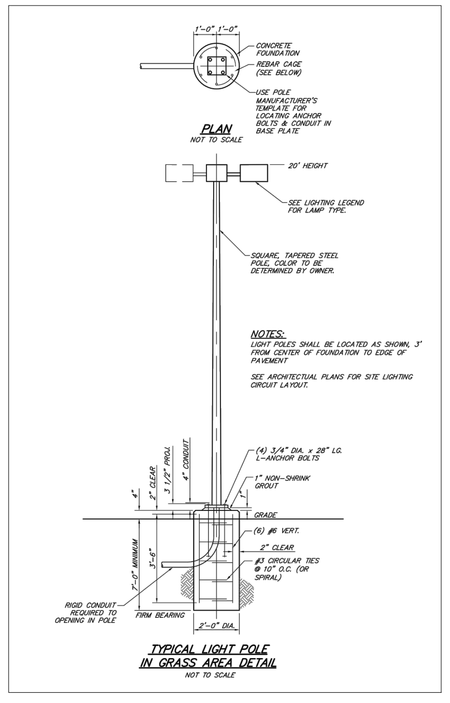

North

Scale: none

landfocus CONSULTING
LANDFOCUSCONSULTING.COM
P. O. Box 67, Pendleton, IN 46064
info@landfocusconsulting.com
w 765.778.4540 f 765.778.3571

Client
TLC Management, Inc
1800 N. Wabahs Ave
Marion, Indiana 46952
Tel. 765-664-5400

Date 06.15.2016

Revision

Date

Project
Homeview Health & Rehabilitation Center
651 S. State Street
City of Franklin, Johnson County, Indiana

Sheet Title
Site Lighting Plan
Fixture Schedule

Sheet No.
C204
of 16 Civil Sheets

G:\TLC\Franklin\Building Addition\Final\C203 SPhase2-dwg, C204, 8/14/2016 11:46:28 AM

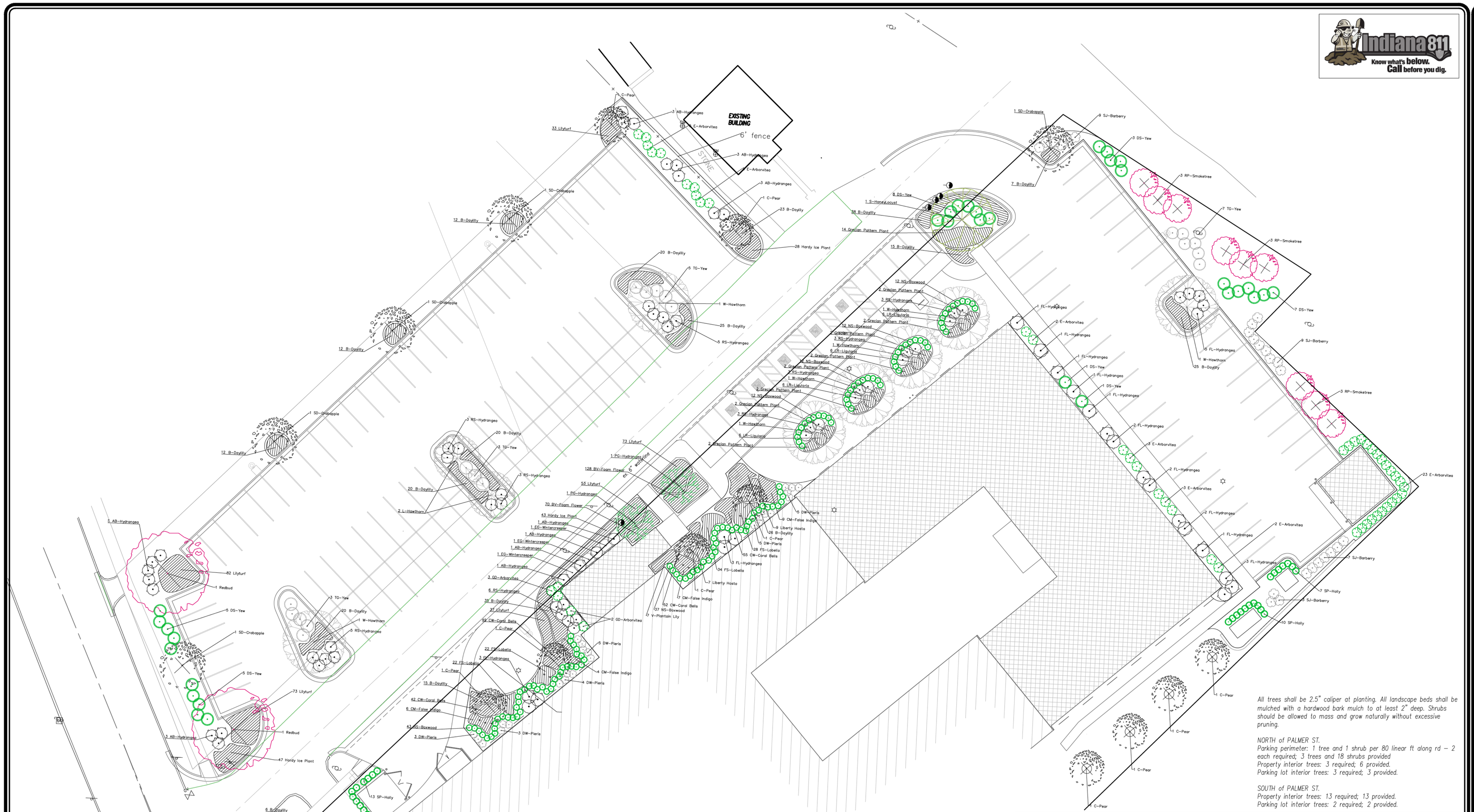

All trees shall be 2.5" caliper at planting. All landscape beds shall be mulched with a hardwood bark mulch to at least 2" deep. Shrubs should be allowed to mass and grow naturally without excessive pruning.

NORTH of PALMER ST.
Parking perimeter: 1 tree and 1 shrub per 80 linear ft along rd – 2 each required; 3 trees and 18 shrubs provided
Property interior trees: 3 required; 6 provided.
Parking lot interior trees: 3 required; 3 provided.

SOUTH of PALMER ST.
Property interior trees: 13 required; 13 provided.
Parking lot interior trees: 2 required; 2 provided.

NOTES:

All lawn areas and landscape / planting beds shall be irrigated with a system approved by the owner.

All areas not otherwise denoted as landscape or planting beds shall be seeded with a landscaper's grass blend on 4" prepared, fertilized topsoil and covered in straw lawn mulch.

The area inside the fence screening the HVAC equipment shall be covered with 2"-3" of a stone landscape mulch over a weed prevention fabric.

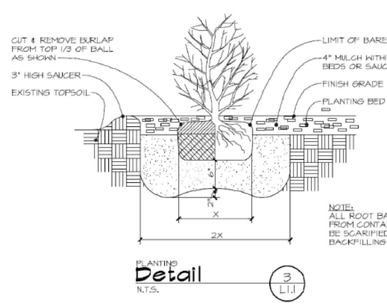

PLANTING Detail 3 L.1.1
N.T.S.

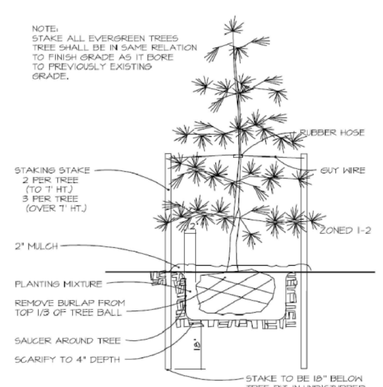

PLANTING Detail 2 L.1.1
N.T.S.

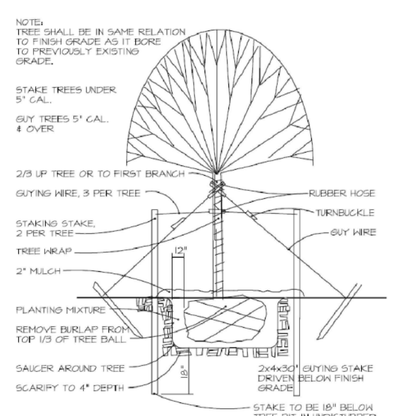

PLANTING Detail 1 L.1.1
N.T.S.

Category	QTY.	ABRV.	Common Name	Botanical Name
Deciduous Shade Trees	7	W-Hawthorn	Washington Hawthorn	Crataegus phaenopyrum
	1	S-Honeylocust	Sunburst Honeylocust	Gleditsia triacanthos var. inermis 'Sunburst'
Deciduous Ornamental Trees	10	C-Pear	Chanticleer Pear	Pyrus calleryana 'Chanticleer'
	2	Redbud	Eastern Redbud	Cercis canadensis
	2	L-Hawthorn	Lavalle Hawthorn	Crataegus x lavallei
	5	SD-Crabapple	Snowdrift Crabapple	Malus 'Snowdrift'
	9	RP-Smoketree	Royal Purple Smoketree	Cot nus coggygr a Royal Purple
	2	PG-Hydrangea	PeeGee Panicle Hydrangea (tree form)	Hydrangea paniculata 'Grandiflora'
Deciduous Shrubs	26	FL-Hydrangea	Fire Light Hardy Hydrangea	Hydrangea paniculata 'SMHPFL' P.P.A.F. Can. P.B.R.A.F.
	34	RS-Hydrangea	Next Generation Red Sensation Hydrangea	Hydrangea macrophylla 'Red Sensation' P.P. #18,197
	26	AB-Hydrangea	Annabelle Hydrangea	Hydrangea arborescens 'Annabelle'
	25	SJ-Barberry	Sunsation® Japanese Barberry	Berberis thunbergii 'Monry' P.P.# 11332, Can. PBR #3487
Evergreen Shrubs	48	E-Arborvitae	Emerald Arborvitae	Thuja occidentalis 'Smaragd'
	128	NS-Boxwood	North Star Boxwood	Buxus sempervirens 'Katerberg' P.P. #15,998, C.B.R. #2,635
	25	DW-Pieris	Dorothy Wycoff Pieris	Pieris japonica 'Dorothy Wycoff'
	5	GD-Arborvitae	Gold Drop Arborvitae	Thuja occidentalis 'Gold Drop'
	3	EG-Wintercreeper	Emerald 'n Gold Wintercreeper	Euonymus fortunei 'Emerald 'n Gold'
	22	TG-Yew	Huber's Tawny Gold Spreading Yew	Taxus x media 'Huber's Tawny Gold'
	32	DS-Yew	Dense Spreading Yew	Taxus x media 'Densiformis'
	30	SP-Holly	Sky Pencil Japanese Holly	Ilex crenata 'Sky Pencil'
Perennials/Herbs/Groundcover	356	Lilyturf	Lilyturf	Liriope muscari
	150	Hardy Ice Plant	Hardy Ice Plant	Delosperma cooperi
	316	B-Daylily	Bitsy Daylily	Hemerocallis 'Bitsy'
	26	CM-FalseIndigo	Carolina Moonlight False Indigo	Baptisia x 'Carolina Moonlight'
	106	FS-Lobelia	Fan Scarlet Lobelia	Lobelia x speciosa 'Fan Scarlet'
	198	CW-Coral Bells	Carnival Watermelon Coral Bells	Heuchera x villosa 'Watermelon' P.P.A.F.
	16	Liberty Hosta	Liberty Hosta	Hosta x 'Liberty' P.P # 12,531
	7	V-Plantain Lily	Victory Plantain Lily	Hosta x 'Victory'
	30	Grecian Pattern Plant	Grecian Pattern Plant	Acanthus mollis 'Oak Leaf'
	24	LR-Ligularia	Little Rocket Ligularia	Ligularia 'Little Rocket'
	198	BV-FoamFlower	Black Velvet Foam Flower	Tiarella x 'Black Velvet' P.P # 12348
Ornamental Grass	2	Maiden Grass	Maiden Grass	Miscanthus sinensis 'Gracillimus'

North

Scale: 1" = 20'

landfocus CONSULTING
LANDFOCUSCONSULTING.COM
P. O. Box 67, Pendleton, IN 46064
info@landfocusconsulting.com
w 765.778.4540 f 765.778.3571

Client
Homeview Center of Franklin
1800 N. Wabash Ave
Marion, Indiana 46952
Tel. 765-664-5400

Date 08.19.2016

Revision

Date

Project
Homeview Health & Rehabilitation Center
651 S. State Street
City of Franklin, Johnson County, Indiana

Sheet Title
Site Landscape Plan

Sheet No.
C401
of 15 Civil Sheets

G:\TLC\Franklin\Building Addition\Final\C401 SLaP.dwg, Layout1, 8/21/2016 5:38:56 PM

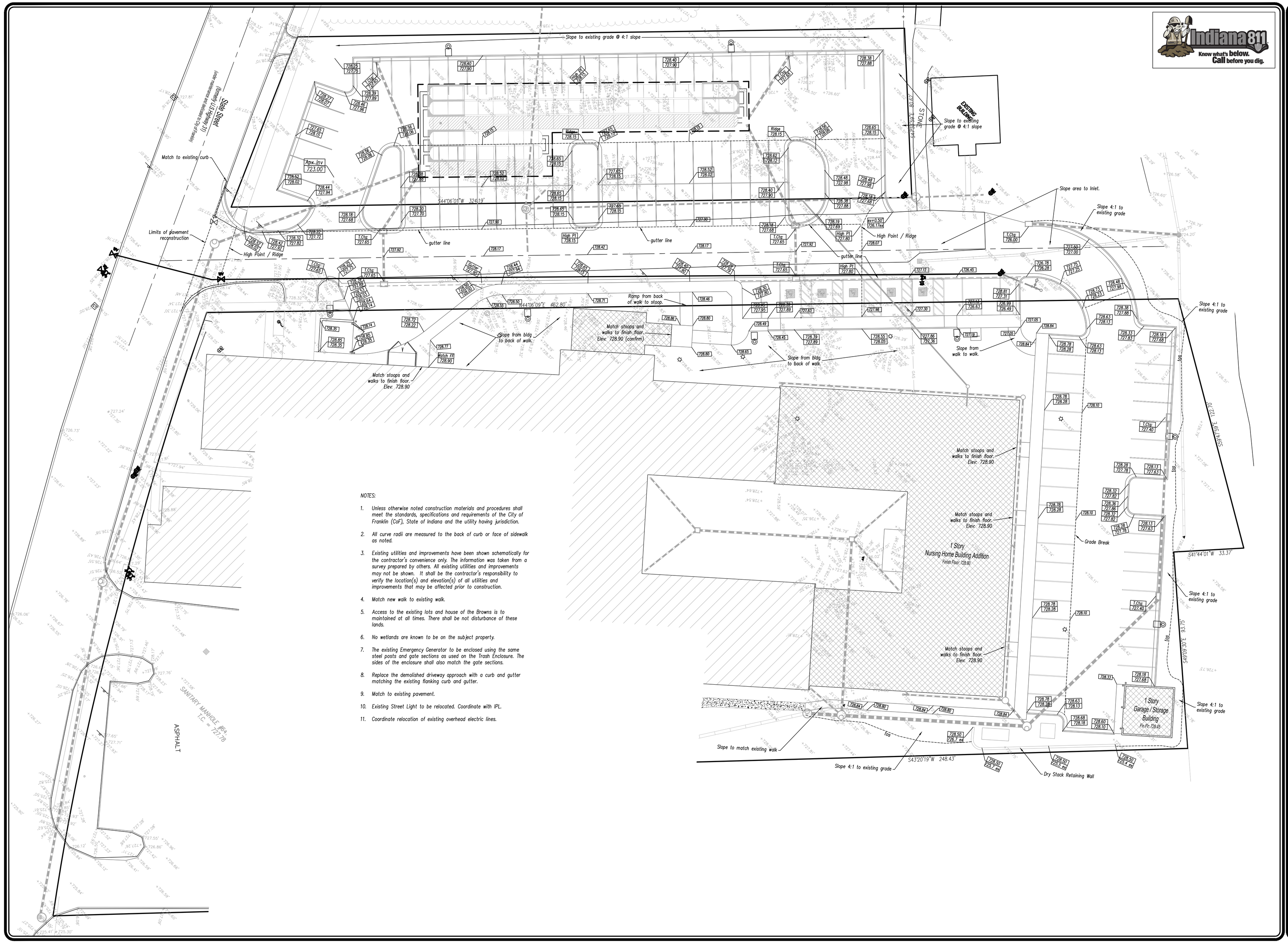

NOTES:

1. Unless otherwise noted construction materials and procedures shall meet the standards, specifications and requirements of the City of Franklin (CoF), State of Indiana and the utility having jurisdiction.
2. All curve radii are measured to the back of curb or face of sidewalk as noted.
3. Existing utilities and improvements have been shown schematically for the contractor's convenience only. The information was taken from a survey prepared by others. All existing utilities and improvements may not be shown. It shall be the contractor's responsibility to verify the location(s) and elevation(s) of all utilities and improvements that may be affected prior to construction.
4. Match new walk to existing walk.
5. Access to the existing lots and house of the Browns is to maintained at all times. There shall be not disturbance of these lands.
6. No wetlands are known to be on the subject property.
7. The existing Emergency Generator to be enclosed using the same steel posts and gate sections as used on the Trash Enclosure. The sides of the enclosure shall also match the gate sections.
8. Replace the demolished driveway approach with a curb and gutter matching the existing flanking curb and gutter.
9. Match to existing pavement.
10. Existing Street Light to be relocated. Coordinate with IPL.
11. Coordinate relocation of existing overhead electric lines.

Indiana 811
Know what's below. Call before you dig.

North

Scale: 1"= 20'

landfocus CONSULTING
LANDFOCUSCONSULTING.COM
P. O. Box 67, Pendleton, IN 46064
info@landfocusconsulting.com
w 765.778.4540 F 765.778.3371

Client
Homeview Center of Franklin
1800 N. Wabahs Ave
Marion, Indiana 46952
Tel. 765-664-5400

Date 08.19.2016

Revision	Date

Project
Homeview Health & Rehabilitation Center
651 S. State Street
City of Franklin, Johnson County, Indiana

Sheet Title
Site Grading Plan

Sheet No.
C301
of 15 Civil Sheets

G:\TLC\Franklin\Building Addition\Final\C301 SGP.dwg, Layout1, 8/20/2016 3:00:18 PM

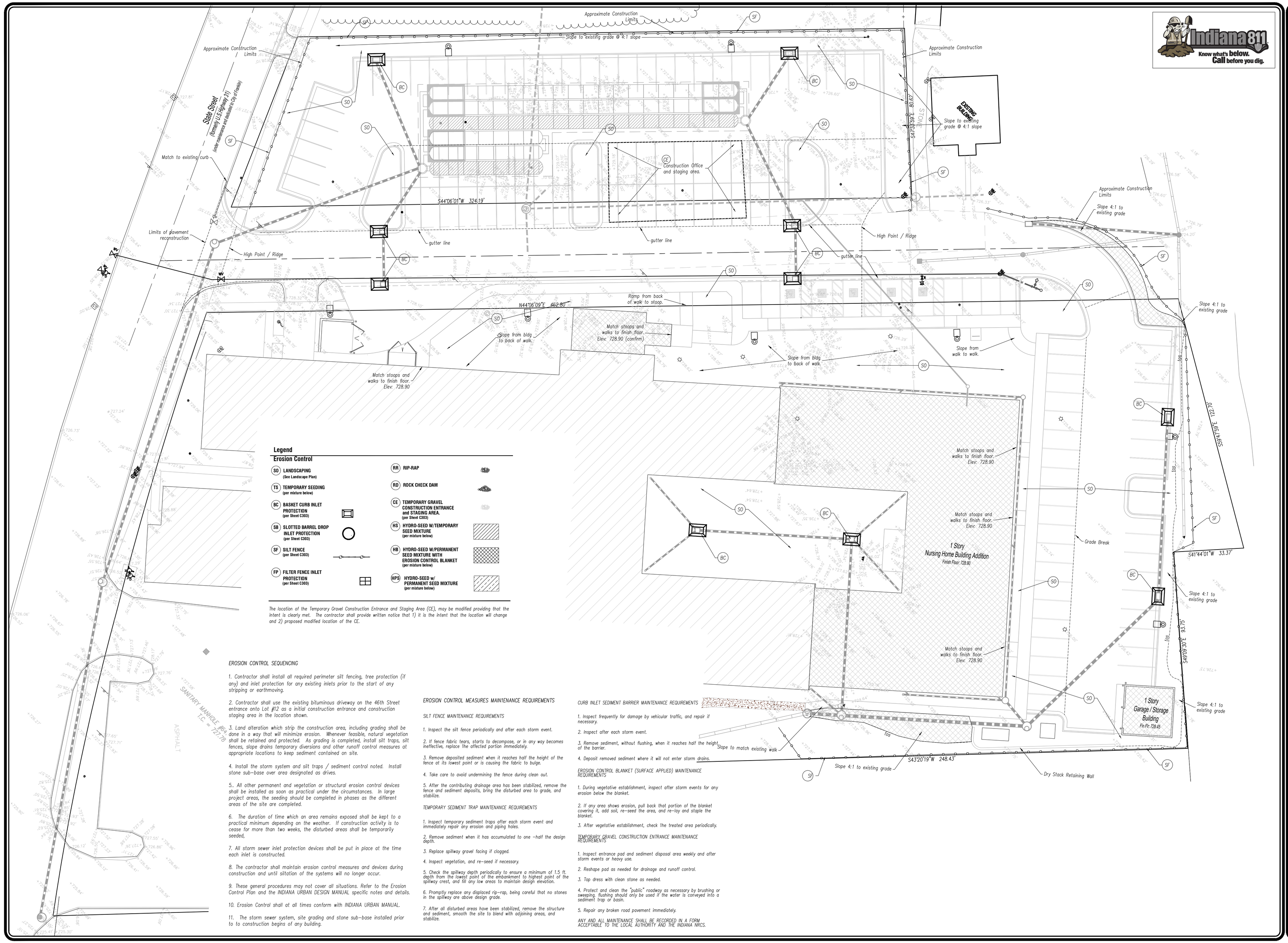

Legend

Erosion Control

- SO — LANDSCAPING (See Landscape Plan)
- TS — TEMPORARY SEEDING (per mixture below)
- BC — BASKET CURB INLET PROTECTION (per Sheet C303)
- SB — SLOTTED BARREL DROP INLET PROTECTION (per Sheet C303)
- SF — SILT FENCE (per Sheet C303)
- FP — FILTER FENCE INLET PROTECTION (per Sheet C303)
- RR — RIP-RAP
- RD — ROCK CHECK DAM
- CE — TEMPORARY GRAVEL CONSTRUCTION ENTRANCE and STAGING AREA. (per Sheet C303)
- HS — HYDRO-SEED W/TEMPORARY SEED MIXTURE (per mixture below)
- HB — HYDRO-SEED W/PERMANENT SEED MIXTURE WITH EROSION CONTROL BLANKET (per mixture below)
- HPS — HYDRO-SEED w/ PERMANENT SEED MIXTURE (per mixture below)

The location of the Temporary Gravel Construction Entrance and Staging Area (CE), may be modified providing that the intent is clearly met. The contractor shall provide written notice that 1) it is the intent that the location will change and 2) proposed modified location of the CE.

EROSION CONTROL SEQUENCING

1. Contractor shall install all required perimeter silt fencing, tree protection (if any) and inlet protection for any existing inlets prior to the start of any stripping or earthmoving.

2. Contractor shall use the existing bituminous driveway on the 46th Street entrance onto Lot #12 as a initial construction entrance and construction staging area in the location shown.

3. Land alteration which strip the construction area, including grading shall be done in a way that will minimize erosion. Whenever feasible, natural vegetation shall be retained and protected. As grading is completed, install silt traps, silt fences, slope drains temporary diversions and other runoff control measures at appropriate locations to keep sediment contained on site.

4. Install the storm system and silt traps / sediment control noted. Install stone sub-base over area designated as drives.

5.. All other permanent and vegetation or structural erosion control devices shall be installed as soon as practical under the circumstances. In large project areas, the seeding should be completed in phases as the different areas of the site are completed.

6. The duration of time which an area remains exposed shall be kept to a practical minimum depending on the weather. If construction activity is to cease for more than two weeks, the disturbed areas shall be temporarily seeded,

7. All storm sewer inlet protection devices shall be put in place at the time each inlet is constructed.

8. The contractor shall maintain erosion control measures and devices during construction and until siltation of the systems will no longer occur.

9. These general procedures may not cover all situations. Refer to the Erosion Control Plan and the INDIANA URBAN DESIGN MANUAL specific notes and details.

10. Erosion Control shall at all times conform with INDIANA URBAN MANUAL.

11. The storm sewer system, site grading and stone sub-base installed prior to to construction begins of any building.

EROSION CONTROL MEASURES MAINTENANCE REQUIREMENTS

SILT FENCE MAINTENANCE REQUIREMENTS

1. Inspect the silt fence periodically and after each storm event.

2. If fence fabric tears, starts to decompose, or in any way becomes ineffective, replace the affected portion immediately.

3. Remove deposited sediment when it reaches half the height of the fence at its lowest point or is causing the fabric to bulge.

4. Take care to avoid undermining the fence during clean out.

5. After the contributing drainage area has been stabilized, remove the fence and sediment deposits, bring the disturbed area to grade, and stabilize.

TEMPORARY SEDIMENT TRAP MAINTENANCE REQUIREMENTS

1. Inspect temporary sediment traps after each storm event and immediately repair any erosion and piping holes.

2. Remove sediment when it has accumulated to one –half the design depth.

3. Replace spillway gravel facing if clogged.

4. Inspect vegetation, and re–seed if necessary.

5. Check the spillway depth periodically to ensure a minimum of 1.5 ft. depth from the lowest point of the embankment to highest point of the spillway crest, and fill any low areas to maintain design elevation.

6. Promptly replace any displaced rip–rap, being careful that no stones in the spillway are above design grade.

7. After all disturbed areas have been stabilized, remove the structure and sediment, smooth the site to blend with adjoining areas, and stabilize.

CURB INLET SEDIMENT BARRIER MAINTENANCE REQUIREMENTS

1. Inspect frequently for damage by vehicular traffic, and repair if necessary.

2. Inspect after each storm event.

3. Remove sediment, without flushing, when it reaches half the height of the barrier.

4. Deposit removed sediment where it will not enter storm drains.

EROSION CONTROL BLANKET (SURFACE APPLIED) MAINTENANCE REQUIREMENTS

1. During vegetative establishment, inspect after storm events for any erosion below the blanket.

2. If any area shows erosion, pull back that portion of the blanket covering it, add soil, re–seed the area, and re–lay and staple the blanket.

3. After vegetative establishment, check the treated area periodically.

TEMPORARY GRAVEL CONSTRUCTION ENTRANCE MAINTENANCE REQUIREMENTS

1. Inspect entrance pad and sediment disposal area weekly and after storm events or heavy use.

2. Reshape pad as needed for drainage and runoff control.

3. Top dress with clean stone as needed.

4. Protect and clean the "public" roadway as necessary by brushing or sweeping; flushing should only be used if the water is conveyed into a sediment trap or basin.

5. Repair any broken road pavement immediately.

ANY AND ALL MAINTENANCE SHALL BE RECORDED IN A FORM ACCEPTABLE TO THE LOCAL AUTHORITY AND THE INDIANA NRCS.

Indiana 811 — Know what's below. Call before you dig.

North

Scale: 1"= 20'

landfocus CONSULTING
LANDFOCUSCONSULTING.COM
P. O. Box 67, Pendleton, IN 46064
info@landfocusconsulting.com
w 765.778.4240 f 765.778.3371

Client
Homeview Center of Franklin
1800 N. Wabahs Ave
Marion, Indiana 46952
Tel. 765-664-5400

Date 08.19.2016

Revision | Date

Project
Homeview Health & Rehabilitation Center
651 S. State Street
City of Franklin, Johnson County, Indiana

Sheet Title
Site Erosion Control Plan

Sheet No.
C302

of 15 Civil Sheets

G:\TLC\Franklin\Building Addition\Final\C302 SEC\P Jeg, C302 SEC\P 8/20/2016 3:10:00 PM

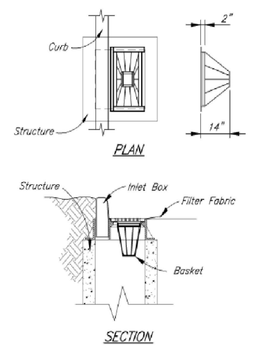

NOTES:

Installation:
Install Basket Curb Inlet Protection As Soon As Inlet Boxes Are Installed (New Development) Or Prior To Land Disturbing Activities (Existing Development).

If Necessary, Adapt Basket Dimensions To Fit Inlet Box Dimensions.

Remove The Grate And Install The Basket. Cut And Install A Piece Of Filter Fabric Large Enough To Line The Inside Of The Basket, And Extend At Least 6 Inches Beyond The Frame. Replace The Grate.

Maintenance:
Inspect After Each Storm Event And Remove Sediment. Remove Tracked On Sediment From The Street (But Not By Flushing With Water) To Reduce The Sediment Load On This Curb Inlet Practice.

BASKET CURB INLET PROTECTION

Not To Scale

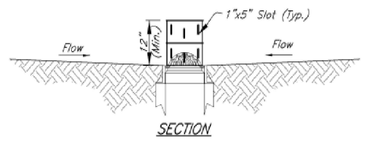

NOTES:

Installation:
Set Barrel Riser Height At Least 6 Inches Below Ground Elevation On The Downslope Side Of The Inlet To Prevent Runoff From Bypassing The Inlet.

If Necessary, On The Low Side Of The Inlet, Build A Temporary Dike Compacted To 6 Inches Higher Than The Riser And Stabilize Appropriately.

Cut Slots At Least 1 Inch Wide And 5 Inches Long In The Barrel, And Cut Out The Barrel Ends.

Place The Barrel Riser Over The Casting Grate.

Wrap Geotextile Fabric Around The Riser Before Placement, And Tuck It Under The Bottom Of The Barrel. Attach The Fabric Top To The Barrel With Cord Or Wire.

Maintenance:
Inspect The Structure After Each Storm Event, And Make Needed Repairs Immediately.

Remove Accumulated Sediment.

When The Contributing Drainage Area Has Been Stabilized, Remove, And Properly Dispose Of All Construction Material And Sediment, And Dispose Of Properly. Grade The Disturbed Area To The Elevation Of The Top Of The Inlet And Stabilize.

SLOTTED BARREL DROP INLET PROTECTION

Not To Scale

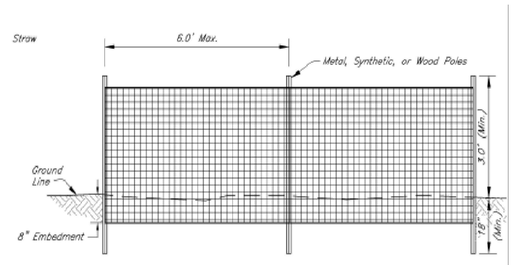

UNSUPPORTED SILT FENCE

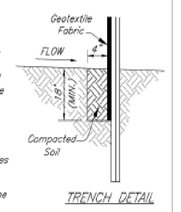

NOTES:

Installation:
Along The Entire Fence Line, Dig An 8 Inch Deep Flat Bottomed Or V-Shaped Trench. Place Fence According To Manufacturer's Recommendations. If Utilizing A Non-Commercial Silt Fence, Install Fencing Per Requirements Of Practice 3.74 (Sediment Fence) In The Indiana Handbook For Erosion Control In Developing Areas.

Maintenance:
Inspect The Silt Fence Periodically, And After Each Storm Event.

If Fence Fabric Tears, Starts To Decompose, Or In Any Way Becomes Ineffective, Replace The Affected Portion Immediately.

Remove Deposited Sediment When It Reaches Half The Height Of The Fence At Its Lowest Point Or Is Causing The Fabric To Bulge.

Take Care To Avoid Undermining The Fence During Clean Out.

After The Contributing Drainage Area Has Been Stabilized, Remove The Fence And Sediment Deposits, Bring The Disturbed Area To Grade, And Stabilize.

SILT FENCE (SEDIMENT FENCE)

Not To Scale

SEEDING:
The Following Table Is For General Seeding Information Only. Consult Section 3.12 Of The Indiana Handbook For Erosion Control In Developing Areas For Recommendations Relating To Steep Banks And Cuts, High Maintenance Areas, And Channels And Areas Of Concentrated Flow.

SEED:
40 Percent Kentucky Bluegrass
40 Percent Creeping Red Fescue
20 Percent Annual Rye Grass

FERTILIZER:
Commercial Fertilizer (12-12-12)

STRAW:
Clean And Free Of Weed Seeds

Spread Fertilizer Uniformly Over Finish Graded Surfaces At A Rate Of 20 Pounds Per 1,000 Square Feet. Thoroughly Disk, Harrow, Or Rake Fertilizer Into Soil To Depth Not Less Than 2 Inches.

Distribute Seed Mix Same Day As Fertilizer Is Applied. Spread Evenly At A Rate Of 3 Pounds Per 1,000 Square Feet. Rake Lightly And Compact Areas With 100 Pound Roller.

Cover Areas With Straw Evenly Spread At A Rate Of 2 Tons Per Acre Immediately After Seeding. Water Areas With Fine Spray. Do Not Flood Or Create Washes. Protect Seeded Areas From Erosion.

Continue Watering Of These Areas On A Daily Basis For The Remainder Of The Construction Period.

Hold Sloped Areas Steeper Than 2 (Horizontal) To 1 (Vertical) With Wire Mesh Or Stakes And Wire.

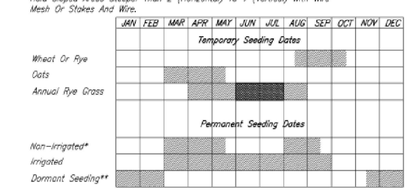

Irrigation Required
* Seeding Dates May Be Extended 5 Days If Mulch Applied And Planted Late Summer
** Increase Seeding Rate By 50%

NOTES:

If Construction Activities Take Place During The Months Of November Through February, Use Dormant Seeding Practices In Place Of Temporary And Permanent Seeding Practices.

See Section 3.12 Of The Indiana Handbook For Erosion Control In Developing Areas For Additional Seeding Recommendations.

EROSION CONTROL NOTES

GENERAL:
Take Measures To Control Erosion And Sedimentation To Assure That Sediment Is Not Transported From The Site By Storm Events. Practices Such As Silt Traps Or Filters Shall Be Installed Prior To Land Disturbing Activities. New Drainage Swales Shall Be Seeded And/Or Sodded, Or Other Protective Practices Applied, Immediately Following Construction. All Practices Shall Be Maintained To Remove Sediment From Runoff Leaving The Site As Long As Unstabilized Soil Conditions Exist.

After Land Disturbing Activities Cease And The Soil Is Stabilized, Temporary Erosion Control Measures May Be Eliminated If Their Purpose Has Been Fulfilled. Any Disturbed Soil Resulting From Removal Of Such Practices Shall Be Stabilized By Approved Methods.

Dispose Properly All Waste And Unused Building Materials Including, But Not Limited To, Garbage, Debris, Cleaning Wastes, Water, Toxic Materials, And Hazardous Substances. Do Not Allow Substances To Be Carried By Runoff Into A Receiving Channel Or Storm Sewer System.

Clean Public Or Private Roadways Daily And After Major Storms Using Acceptable Methods To Remove Any Accumulated Sediment. The Developer's Contractors Are Responsible For Supervision Of The Construction Activity Within The Development And Shall Take All Necessary Actions To Remove Sediment From The Streets.

For Construction Sequence, Maintenance, And Other Soil Erosion Requirements, See Specifications For Site Clearing, Slope Protection, Erosion Control, Landscaping, And Seeding.

Erosion And Sediment Control Practices Must Adhere To, Or Exceed, Those Shown On The Erosion Control Plan, (And Rule 5 327 IAC 15-5) And Shall Be In Accordance With The Indiana Handbook For Erosion Control In Developing Areas, Division Of Soil Conservation, Indiana Department Of Natural Resources.

SURFACE STABILIZATION:
Cut Slopes Which Are To Be Topsoiled Should Be Scarified To A Minimum Depth Of 4 Inches Prior To Placement Of Topsoil. Install Erosion Control Blankets On All Slopes Of 3 (Horizontal) To 1 (Vertical).

Stabilize All Disturbed Ground Left Inactive For Seven Or More Days By Seeding, Sodding, Mulching, Or By Other Equivalent Erosion Control Practices. See The Landscape Plan For Permanent Ground Cover Requirements Adjacent To The Building And Parking Areas.

TEMPORARY GRAVEL CONSTRUCTION ENTRANCE/EXIT PAD:
Construct The Temporary Gravel Drive Using 2-3 Inches INDOT CA No. 2 Washed Stone Over A Stable Foundation. 6 Inches Minimum Thickness. Geotextile Fabric May Be Used Under Wet Conditions Or For Soils Within A High Seasonal Water Table To Provide Greater Bearing Strength. Grade For Positive Drainage.

Inspect The Entrance Pad Area Weekly And After Storm Events Or Heavy Use. Reshape The Pad As Needed For Drainage And Runoff Control. Top Dress Pad With Clean Stone.

SODDING:
Do Not Install Sod On Hot, Dry Soil, Frozen Soil, Compacted Clay, Gravel, Or Pesticide Treated Soil. Ideal Sodding Time Is May 1-June 1, Or September 1-October 20, Although It Can Be Installed As Early As March 15, If Available And Temperatures Are Above 32°F, Or June 1-September 1 If Irrigated.

Install Sod After Other Erosion Control Practices Have Been Completed. Break Up Compacted Soils Sufficiently To Create A Favorable Rooting Depth Of 6-8 Inches, Using A Chisel, Disk, Harrow, Or Rake.

Apply Topsoil If The Site Is Otherwise Unsuited For Establishing Vegetation. Shape, Smooth, And Firm The Soil Surface.

Have The Soil In The Sod Bed Tested To Determine Its pH And Nutrient Level. If The pH Is Too Acidic For The Grass Sod To Be Installed, Apply Lime According To Test Results Or At The Rate Recommended By The Sod Supplier.

Fertilize As Recommended By The Soil Test. If Testing Was Not Done, Consider Applying 400-600 Lbs./Acre Of 12-12-12 Analysis, Or Equivalent Fertilizer, As Recommended By The Soil Test. Work The Fertilizer Into The Soil To 2-4 Inches Deep.

TREE CONSERVATION/PROTECTION:
Protect Trees From Construction Equipment By Fencing Off An Area Equivalent To The Tree's Crown With Temporary Construction Safety Fence. If A Fence Cannot Be Erected, Cushion The Rooting Area With 6 Inches Of Wood Chips, Or Wood Or Brick Paths.

Create Traffic Patterns Such As To Keep Soil Compaction To A Minimum. Store Supplies And Equipment Away From Protected Tree Areas. Aerate Soil Where Compaction Has Been Excessive.

When Clearing Areas Adjacent To Protected Trees, Use Equipment Such As A Brush Cutter Or Rotary Ax, Or Cut By Hand.

Minimize Changes In The Drainage Pattern. Avoid Putting Fill Over The Root System.

Prune Low Hanging Limbs That Could Otherwise Be Broken Off By Equipment.

Repair Wounds Simply By Removing Damaged Bark And Wood Tissue (Do Not Use Tree Paint).

EROSION CONTROL BLANKETS:
Use Machine Produced Mat Of Straw Fiber Matrix Or Curled Wood Excelsior Of 80 Percent, 6 Inch Or Longer Fiber Length.

Evenly Distribute Fibers Over Entire Area Of Blanket To Provide Consistent Thickness.

Provide Blanket With Top Side Covered With Biodegradable Extruded Plastic Mesh.

Treat Blankets To Impart Smolder Resistance Without Use Of Chemical Additives.

Provide "Curlex Blankets" By American Excelsior Company, Or "S150" By North American Green, Or Accepted Substitute.

EROSION CONTROL BLANKET STAPLES:
Use Minimum 0.091 Inch Diameter Steel Wire "U" Shape With Legs 6 Inches In Length With 1 Inch Crown.

Practice 3.01
Temporary Gravel Construction Entrance/Exit Pad

Purpose *(Exhibit 3.01-A)*
* To provide a stable entrance/exit condition from the construction site.
* To keep mud and sediment off public roads.

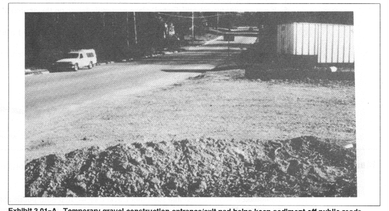

Exhibit 3.01-A. Temporary gravel construction entrance/exit pad helps keep sediment off public roads.

Requirements *(Exhibit 3.01-B)*
Material: 2-3 in. washed stone (INDOT CA No. 2) over a stable foundation.
Thickness: 6 in. minimum
Width: 12 ft. minimum or full width of entrance/exit roadway, whichever is greater.
Length: 50 ft. minimum. The length can be shorter for small sites such as for an individual home.
Washing facility (optional): Level area with 3 in. washed stone minimum or a commercial rack, and waste water diverted to a sediment trap or basin (Practice 3.72).
Geotextile fabric underliner: May be used under wet conditions or for soils within a high seasonal water table to provide greater bearing strength.

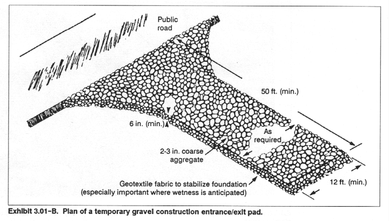

Exhibit 3.01-B. Plan of a temporary gravel construction entrance/exit pad.

Installation *(Exhibit 3.01-C)*
1. Avoid locating on steep slopes or at curves in public roads.
2. Remove all vegetation and other objectionable material from the foundation area, and grade and crown for positive drainage.
3. If slope towards the road exceeds 2%, construct a 6-8 in.-high water bar (ridge) with 3:1 side slopes across the foundation area about 15 ft. from the entrance to divert runoff away from the road (Practice 3.24) (see *Exhibit 3.01-C*).
4. Install pipe under the pad if needed to maintain proper public road drainage.
5. If wet conditions are anticipated, place geotextile fabric on the graded foundation to improve stability.
6. Place stone to dimensions and grade shown in the erosion/sediment control plan, leaving the surface smooth and sloped for drainage.
7. Divert all surface runoff and drainage from the stone pad to a sediment trap or basin.

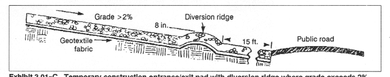

Exhibit 3.01-C. Temporary construction entrance/exit pad with diversion ridge where grade exceeds 2%.

Maintenance
* Inspect entrance pad and sediment disposal area weekly and after storm events or heavy use.
* Reshape pad as needed for drainage and runoff control.
* Topdress with clean stone as needed.
* Immediately remove mud and sediment tracked or washed onto public roads by brushing or sweeping. Flushing should only be used if the water is conveyed into a sediment trap or basin.
* Repair any broken road pavement immediately.

Common concerns *(Exhibit 3.01-D)*
Inadequate runoff control—results in sediment washing onto road (see *Exhibit 3.01-D*).
Stone too small, pad too thin, or geotextile fabric absent—results in ruts and a muddy condition as stone is pressed into the soft subgrade soil.
Pad too short for heavy construction traffic—extend the pad beyond the 50-ft. length as needed.
Pad not flared sufficiently at road entrance—results in mud being tracked onto the road and possible damage to the road edge; widen stone entrance and repair road damage.
Unstable foundation—use geotextile fabric under the pad and/or improve foundation drainage.

Exhibit 3.01-D. Inadequate runoff control allows sediment to be tracked or washed into the road and into storm sewers.

Practice 3.52
Fabric Drop Inlet Protection

Purpose *(Exhibit 3.52-A)*
* To capture sediment at the entrance to a storm drain, allowing full use of the storm drain system during the construction period.

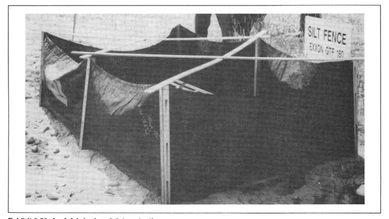

Exhibit 3.52-A. A fabric drop inlet protection.

Requirements *(Exhibit 3.52-B)*
Contributing drainage area: 1 acre maximum.
Capacity: Runoff from a 2-yr. frequency, 24-hr. duration storm event entering a storm drain without bypass flow.
Fabric material: Geotextile fabric for filtration.
Height of fabric: 1 to 1½ ft., measured from top of inlet.
Approach: Pool area flat (less than 1% slope) with sediment storage of 945 cu.ft./acre disturbed.
Stability: Structure must withstand 1½ ft. head of water and sediment without collapsing or undercutting.
Support posts: Steel fence posts or 2 x 2-in. or 2 x 4-in. hard wood posts, 3 ft. minimum length, 3 ft. maximum spacing; top frame support recommended. Cross bracing tops of posts to opposite corners greatly strengthens support.

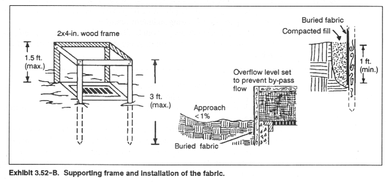

Exhibit 3.52-B. Supporting frame and installation of the fabric.

Installation *(Exhibit 3.52-C)*
1. To prevent runoff from bypassing the inlet, set the top of the fabric at least 6 in. below the downslope ground elevation, OR build a temporary dike (compacted to 6 in. higher than the fabric) on the low side of the fabric (see *Exhibit 3.52-C*).
2. Cut the fabric from a single roll to eliminate joints. (Provide at least 2 ft. of overlap if a joint is needed.)
3. Bury the bottom of the fabric at least 1 ft. deep, backfill, and compact the backfill (see *Exhibit 3.52-B*).
4. Space the support posts evenly against the inlet perimeter a maximum of 3 ft. apart, and drive them about 1½ ft. into the ground. (Overflow must fall directly into the inlet and not on unprotected soil.)

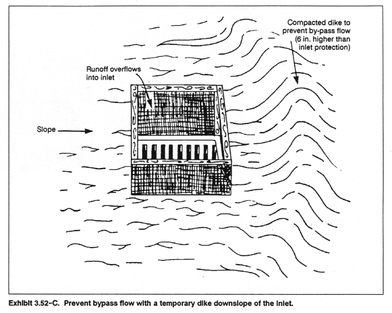

Exhibit 3.52-C. Prevent bypass flow with a temporary dike downslope of the inlet.

Maintenance
* Inspect the fabric barrier after storm events, and make needed repairs immediately.
* Remove sediment from the pool area to provide storage for the next storm. Avoid damaging or undercutting the fabric during sediment removal.
* When the contributing drainage area has been stabilized, remove and properly dispose of all construction material and sediment, grade the area to the elevation of the top of the inlet, then stabilize.

Common concerns
Posts and fabric not supported at the top—results in collapse of the structure.
Fabric not properly buried at bottom—results in undercutting.
Top of fabric barrier set too high—results in the flow bypassing the storm inlet or collapsing the structure.
Temporary dike below drop inlet not maintained—results in the flow bypassing the storm in-let.
Sediment not removed from pool—results in inadequate storage volume for the next storm.
Fence not erected against drop inlet—results in erosion and undercutting.
Land slope at storm drain too steep—results in high flow velocity, poor trapping efficiency, and inadequate storage volume; excavation of the sediment storage area may be necessary.

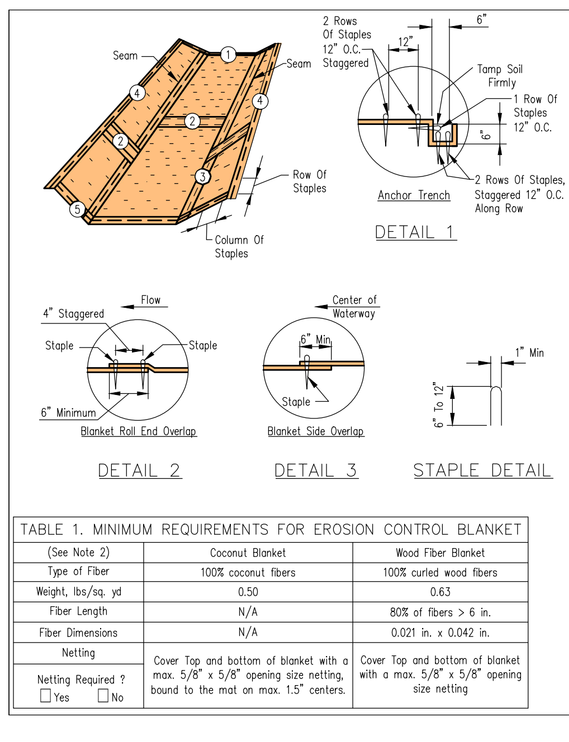

NOTES:
1. Install erosion control blanket (ECB) over waterway. Waterway Width_____ft ECB width _____ft length _____ft Sta. _____ to _____
2. The erosion control blanket shall consist of a machine produced mat of curled wood or coconut fibers, shall have an expected material life of a least 12 months, shall be new and unused, shall be furnished in rolls, and shall meet the minimum requirements stated in Table 1 below. Alternative material may be used as long as the expected material life is at least 12 months.
3. Prepare soil prior to installing erosion control blanket, including seeding, fertilizing, and lime application.
4. The erosion control blanket shall be placed in firm contact with the soil and not be allowed to bridge over surface irregularities. The blanket shall not be stretched.
5. Start laying the blankets by rolling center blanket in the direction of flow, centered on the centerline of waterway. There shall not be an overlap of blankets at the center of the waterway.
6. The erosion control blanket shall be anchored, overlapped, and stapled according to manufacturer's instructions. If no manufacturer's instructions are available, install the blanket as follows:
   a. Staples shall be "U" shaped, 0.12 in diameter wire or greater (#11 gauge). See Staple Detail for dimensions.
   b. Bury upstream end of blanket in a trench 6 inch wide by 6 inch deep and stapled in staggered rows across the width as shown in Detail 1.
   c. For joining ends of rolls, overlap end of upslope blanket a minimum of 6 inches over downslope blanket (shingle style). Use a double row of staggered staples 4 inches apart, as shown in Detail 2.
   d. Blankets on side slopes shall overlap a minimum 6 inches over the blanket below (shingle style). Staple overlap at 12 inch intervals. See Detail 3.
   e. The outer edge along sides of the blanket shall be stapled every 12 inches. See Detail 4.
   f. Staples are to be placed alternately in columns (in the direction of the waterway) 2 feet apart and in rows (across the waterway) 3 feet apart, throughout the area covered by erosion blanket.
   g. Downstream (terminal) end of blanket shall be stapled with a double row of staggered staples 12 inches apart. See Detail 5.

TABLE 1. MINIMUM REQUIREMENTS FOR EROSION CONTROL BLANKET		
(See Note 2)	Coconut Blanket	Wood Fiber Blanket
Type of Fiber	100% coconut fibers	100% curled wood fibers
Weight, lbs./sq. yd	0.50	0.63
Fiber Length	N/A	80% of fibers > 6 in.
Fiber Dimensions	N/A	0.021 in. x 0.042 in.
Netting	Cover Top and bottom of blanket with a max. 5/8" x 5/8" opening size netting, bound to the mat on max. 1.5" centers.	Cover Top and bottom of blanket with a max. 5/8" x 5/8" opening size netting
Netting Required ? ☐Yes ☐No		

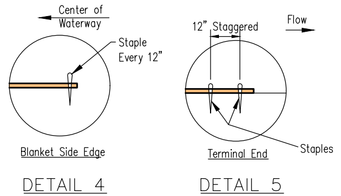

Not To Scale

EROSION BLANKET INSTALLATION DETAILS

NRCS
File No. IL ENG-61
Drawing No.
Page 1 of 1
Sheet of

SITE ACCESS & PREPARATION

Temporary Construction Ingress/Egress Pad (Large Sites—Two Acres or Larger)

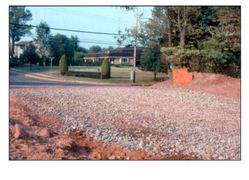

A temporary construction ingress/egress pad is a sediment control measure consisting of a stabilized aggregate pad with geotextile underlayment that is used at any point where construction traffic will be traversing between a large construction site and adjoining public right-of-way, street, alley, sidewalk, or parking areas.

Purpose

To provide ingress/egress to a construction site and minimize tracking of mud and sediment onto public roadways.

Specifications

Location
- Avoid locating on steep slopes or at curves in public roads.

Dimensions
- Width – 20 feet minimum or full width of entrance/exit roadway, whichever is greater.
- Length – 150 feet minimum (length can be shorter for small sites).
- Thickness – eight inches minimum.

Washing Facility (optional)
- Level area with three inch, or larger, washed aggregate or install a commercial wash rack.
- Divert waste water to a sediment trap or basin.

TEMPORARY CONSTRUCTION INGRESS/EGRESS PAD (LARGE SITES—TWO ACRES OR LARGER)

Materials
- One to two and one-half inch diameter washed aggregate [Indiana Department of Transportation Course Aggregate No. 2 (see Appendix D)].
- One-half to one and one-half inch diameter washed aggregate [INDOT CA No. 53 (see Appendix D)].
- Geotextile fabric underlayment (see Appendix C) (used as a separation layer to prevent intermixing of aggregate and the underlying soil material and to provide greater bearing strength when encountering wet conditions or soils with a seasonal high water table limitation).

Installation
1. Remove all vegetation and other objectionable material from the foundation area.
2. Grade foundation and crown for positive drainage. If the slope of the construction entrance is toward a public road and exceeds two percent, construct an eight inch high diversion ridge with a ratio of 3-to-1 side slopes across the foundation area about 15 feet from the entrance to divert runoff away from the road (see Temporary Construction Ingress/Egress Pad Cross-Section View Worksheet).
3. Install a culvert pipe under the pad if needed to maintain proper public road drainage.
4. If wet conditions are anticipated, place geotextile fabric on the graded foundation to improve stability.
5. Place aggregate (INDOT CA No. 2) to the dimensions and grade shown in the construction plans, leaving the surface smooth and sloped for drainage.
6. Top-dress the first 50 feet adjacent to the public roadway with two to three inches of washed aggregate (INDOT CA No. 53) (optional, used primarily where the purpose of the pad is to keep soil from adhering to vehicle tires).
7. Where possible, divert all storm water runoff and drainage from the ingress/egress pad to a sediment trap or basin.

Maintenance
- Inspect daily.
- Reshape pad as needed for drainage and runoff control.
- Top dress with clean aggregate as needed.
- Immediately remove mud and sediment tracked or washed onto public roads. Flushing should only be used if the water can be conveyed into a sediment trap or basin.

TEMPORARY CONSTRUCTION INGRESS/EGRESS PAD (LARGE SITES—TWO ACRES OR LARGER)

Temporary Construction Ingress/Egress Pad
Plan View Worksheet
(large sites—two acres or larger)

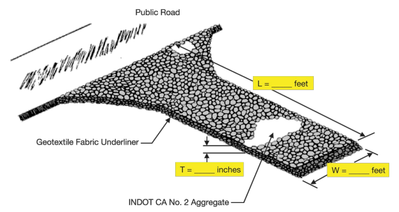

L = Ingress/Egress Pad Length
W = Ingress/Egress Pad Width
T = Aggregate Thickness

(Note: For minimum dimensions, see the "Specifications" section of this measure.)

Source: Adapted from North Carolina Erosion and Sediment Control Planning and Design Manual, 1993

TEMPORARY CONSTRUCTION INGRESS/EGRESS PAD (LARGE SITES—TWO ACRES OR LARGER)

Temporary Construction Ingress/Egress Pad
Cross-Section View Worksheet
(large sites two acres or larger)

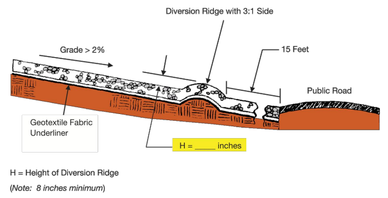

H = Height of Diversion Ridge
(Note: 8 inches minimum)

Source: Adapted from North Carolina Erosion and Sediment Control Planning and Design Manual, 1993

Indiana 811 Know what's below. Call before you dig.

North

Scale: none

landfocus CONSULTING
LANDFOCUSCONSULTING.COM
P. O. Box 67, Pendleton, IN 46064
info@landfocusconsulting.com
w 765.778.4540 f 765.778.3571

Client
Homeview Center of Franklin
1800 N. Wabahs Ave
Marion, Indiana 46952
Tel. 765-664-5400

Date 08.19.2016

Revision

Date

Project
Homeview Health & Rehabilitation Center
651 S. State Street
City of Franklin, Johnson County, Indiana

Sheet Title
Site Erosion Control Plan
Construction Details

Issued
Drawn
Checked
Approved

Sheet No.
C303
of 15
Civil Sheets

G:\TLC\Franklin\Building Addition\Final\C303 C304 SEC\Detail Sheets.dwg, C303 SEC-P Details, 8/20/2016 3:12:27 PM

CSPP Plan Element Index / Review Checklist

Reference # Response / Comments

A1 Sheet C303

A2 Boundary Surveys attached as Sheet C101–C103

A3 GENERAL DESCRIPTION OF PROPOSED IMPROVEMENTS

This project consists of the necessary site improvements to construct a building addition onto the existing Homeview Healthcare & Rehabilitation Center. This includes demolition of a portion of existing site improvements, site grading, extension of dedicated waterline, new sanitary sewer connection, new waterline connections, storm collection system (both off-site and on-site), storm water detention and water quality systems, and parking lot improvements. These improvements includes lands on both the northerly and southerly side of Palmer Street, located at 651 State Street

A4 Title Sheet / Sheet C304 (Soils Survey Map)

A5 Land Description:

LANDS NORTH OF PALMER STREET:
Homeview Center North Parking Lot Parcel (Combined)

A part of the lands defined in Instruments #2002–034113 (Georganna Halton), #2010–006403 (Carmel K Sanders), #2014–006496 (Dirinda F. Asher) and #2003–012996 (Johnson County Public Library), all recorded in the office of the Recorder, Johnson County, Indiana, being a part of the Northeast Quarter of Section 23, and the Northwest Quarter of Section 24, both in Township 12 North, Range 4 East, of the second Principal Meridian, Franklin Township, Johnson County, Indiana, more particularly described as follows:

Commencing on the East Line of said Northeast Quarter section, said line also being the West Line of said Northwest Quarter section, 1526 feet, more or less, south of the Northeast corner thereof, said point being the intersection of said East and West Line, with the Northerly right–of–way line of Palmer Street, as now located; thence South 44 degrees, 06 minutes, 01 seconds West, (basis of bearing per ALTA surveys of the subject parcels, prepared by Miller Surveying, dated November 14, 2014); along said northerly right–of–way line, and the southerly line of said Halton and Johnson County Library parcels, 107.70 feet, to a point on the easterly right–of–way line of State Street as now located and the southwesterly corner of said last said parcel; thence North 23 degrees, 47 minutes, 59 seconds West, along said easterly right–of–way line and westerly line of last said parcel, 86.98 feet; thence North 44 degrees, 06 minutes, 01 seconds East, parallel with said northerly right–of–way line of Palmer Street and across all four referenced parcels, 289.12 feet, to a point on the easterly line of said Asher parcel, said point being on the common line of said Asher parcel with the parcel described in Instrument #87647 (Brown); thence South 47 degrees, 33 minutes, 59 seconds East, along said common parcel line, 80.62 feet, to the common south corner of last said parcels, said point being on said northerly right–of–way line of said Palmer Street; thence South 44 degrees, 06 minutes, 01 seconds West, along said right–of–way line, 216.49 feet to the POINT OF BEGINNING, containing 0.567 acres (27,712.9 square feet), more or less.

LANDS SOUTH OF PALMER STREET:
A PART OF THE NORTHWEST QUARTER OF SECTION 24, TOWNSHIP 12 NORTH, RANGE 4 EAST AND PART OF THE NORTHEAST QUARTER OF SECTION 23, TOWNSHIP 12 NORTH, RANGE 4 EAST LOCATED IN JOHNSON COUNTY, INDIANA, DESCRIBED AS FOLLOWS:

COMMENCING AT THE MAGSPIKE SET AT THE SOUTHWEST CORNER OF THE NORTHWEST QUARTER OF SECTION 24, TOWNSHIP 12 NORTH, RANGE 4 EAST THENCE NORTH 00 DEGREES 29 MINUTES 41 SECONDS WEST (ASSUMED BEARING) 1126.51 FEET TO A 5/8" STEEL REBAR WITH YELLOW CAP STAMPED "MILLER SURVEYING" ON THE SOUTH LINE OF PALMER STREET AND THE POINT OF BEGINNING OF THIS DESCRIPTION. THENCE SOUTH 44 DEGREES 06 MINUTES 01 SECONDS WEST 69.53 FEET ALONG THE MONUMENTED SOUTH LINE OF SAID PALMER STREET (ALSO THE NORTH LINE OF THE 1.598 ACRE TRACT OF REAL ESTATE DESCRIBED IN INSTRUMENT #98003B2001) TO A 5/8" STEEL REBAR WITH YELLOW CAP STAMPED "MILLER SURVEYING" AT THE POINT OF INTERSECTION OF SAID SOUTH LINE AND THE EASTERLY RIGHT–OF–WAY LINE OF STATE STREET (OLD U.S. 31) SAID 5/8" STEEL REBAR WITH YELLOW CAP STAMPED "MILLER SURVEYING" BEING 30 FEET MEASURED RADIALLY FROM THE AS BUILT CENTERLINE OF STATE STREET (SEPTEMBER 2015). THENCE SOUTHEASTERLY (30 FEET MEASURED NORTHEASTERLY FROM SAID CENTERLINE) ALONG A NON TANGENT CURVE TO THE LEFT, SAID CURVE HAVING A RADIUS OF 1703.52 FEET, AN ARC LENGTH OF 148.26 AND BEING SUBTENDED BY A CHORD HAVING A BEARING OF SOUTH 28 DEGREES 19 MINUTES 53 SECONDS EAST A CHORD DISTANCE OF 148.21 FEET TO A 5/8" STEEL REBAR WITH YELLOW CAP STAMPED "MILLER SURVEYING", THENCE SOUTHERLY (30 FEET MEASURED NORTHEASTERLY FROM SAID CENTERLINE) ALONG A NON TANGENT CURVE TO THE LEFT, SAID CURVE HAVING A RADIUS OF 1243.25 , AN ARC LENGTH OF 138.84 FEET SUBTENDED BY A CHORD HAVING A BEARING OF SOUTH 33 DEGREES 40 MINUTES 27 SECONDS EAST A CHORD DISTANCE OF 138.77 FEET TO A 5/8" STEEL REBAR WITH YELLOW CAP STAMPED "MILLER SURVEYING" AT THE POINT OF TERMINUS OF SAID CURVE TO THE LEFT. THENCE SOUTH 43 DEGREES 16 MINUTES 00 SECONDS EAST 9.20 FEET PARALLEL WITH SAID CENTERLINE TO A 5/8" STEEL REBAR WITH YELLOW CAP STAMPED "MILLER SURVEYING" ON THE SOUTH LINE OF TRACT 2 AS DESCRIBED IN INSTRUMENT #2004–028120; THENCE NORTH 43 DEGREES 20 MINUTES 19 SECONDS EAST 282.90 FEET ALONG THE SOUTH LINE OF SAID TRACT 2 TO A 5/8" STEEL REBAR WITH YELLOW CAP STAMPED "MILLER SURVEYING" AT THE SOUTHEASTERLY CORNER OF SAID TRACT 2. THENCE NORTH 36 DEGREES 51 MINUTES 48 SECONDS WEST 65.74 FEET (PARALLEL WITH AND 300 FEET NORTHEAST OF THE MIDDLE OF THE MADISON AND INDIANAPOLIS STATE ROAD AS DESCRIBED IN D.R. 71, P.491–493) AND ALONG THE EASTERLY LINE OF SAID TRACT 2 TO A 5/8" STEEL REBAR WITH YELLOW CAP STAMPED "MILLER SURVEYING" ON THE SOUTH LINE OF TRACT 1 AS DESCRIBED IN INSTRUMENT #2004–028120. THENCE NORTH 43 DEGREES 20 MINUTES 19 SECONDS EAST 246.43 FEET TO A 5/8" STEEL REBAR WITH YELLOW CAP STAMPED "MILLER SURVEYING" AT THE SOUTHEASTERLY CORNER OF SAID TRACT 1. THENCE NORTH 49 DEGREES 09 MINUTES 30 SECONDS WEST 93.75 FEET PARALLEL WITH AND 63 FEET MEASURED SOUTHWESTERLY FROM THE CENTERLINE OF THE CONRAIL RAILROAD ALONG THE EASTERLY LINE OF SAID TRACT 1 AND SAID EASTERLY LINE EXTENDED NORTHWEST TO A MAGNAIL ON THE SOUTH LINE OF SAID 1.598 ACRE TRACT. THENCE NORTH 41 DEGREES 44 MINUTES 01 SECONDS EAST 33.37 FEET ALONG THE SOUTH LINE OF SAID 1.598 ACRE TRACT TO A 5/8" STEEL REBAR WITH YELLOW CAP STAMPED "MILLER SURVEYING" AT THE SOUTHEASTERLY CORNER OF SAID 1.598 ACRE TRACT. THENCE NORTH 59 DEGREES 47 MINUTES 59 SECONDS WEST 122.70 FEET ALONG THE EASTERLY LINE OF SAID 1.598 ACRE TRACT TO A CALLED FOR AND FOUND IRON PIN AT THE NORTHEASTERLY CORNER OF SAID 1.598 ACRE TRACT. THENCE SOUTH 44 DEGREES 06 MINUTES 01 SECONDS WEST 393.27 FEET ALONG THE SOUTH LINE OF PALMER STREET TO THE POINT OF BEGINNING, CONTAINING 2.942 ACRES, MORE OR LESS.

A6 Sheets C101–C501

A7 051202040900 60

A8 none

A9 Single discharge point to storm sewers maintained by the City of Franklin.

A10 none

A11 storm sewers maintained by the City of Indianapolis and Fall Creek

A12 none known

A13 none (See FEAM Map Sheet C000)

A14 3.0 cfs / 1 cfs

A15 North: Library grounds, one single family house
East: railroad tracks, residential single and two family homes
South: undeveloped, alternately farmland, maintained grass.
West: State Street, retirement residential community

A16 Sheets C101–C601

A17 existing nursing home development and parking lot

A18 Sheet C304 Refer to the Soils Exploration report for soils information.

A19 Sheets C501

A20 off–site storm line proposed from an existing storm manhole at the projects southwesterly corner, northerly along State Street to Palmer Street.

A21 none proposed

A22 Sheets C301

A23 Sheets C301

B1 Pollution sources may be of any type and from any activity that is associated with the site and building construction of a commercial site and building. This includes, but is not limited to, fuels, lubricants, and construction materials.

B2 Sheet C302

B3 Sheet C303

B4 Sheet C302

B5 Sheet C302

B6 Sheet C302–C303

B7 Sheet C302–C303

B8 Sheet C302–C303

B9 Sheet C302

B10 Sheet C302–C304

B11 Sheet C302–C304

B12 Sheet C302–C304

B13. Material handling and spill prevention plan:

Purpose
The intention of this Spill Prevention, Control and Countermeasures (SPCC) is to establish the procedures and equipment required to prevent the discharge of oil and hazardous substances in quantities that violate applicable water quality standards, cause a sheen upon or discoloration of the surface of navigable waters or adjoining shorelines, or cause sludge or emulsion to be deposited beneath the surface of the water or adjoining shorelines. The Plan also establishes the activities required to mitigate such discharges (i.e., countermeasures) should they occur.

Definitions:
Pollutant means pollutant of any kind or in any form, including, but not limited to sediment, paint. cleaning agents, concrete washout. pesticides, nutrients, trash, hydraulic fluids, fuel, oil, petroleum, fuel oil, sludge, oil refuse, and oil mixed with wastes other than dredged soil.

Discharges:
Includes but is not limited to, any spilling, leaking, pumping, pouring, emitting, emptying, or dumping.

Navigable Waters:
Means all waters of the United States that are connected with a navigable stream, lake, or sea. (Note: This definition is usually interpreted to mean any wastewater (even normally dry wash or storm sewer) that eventually drains into a navigable stream).

Plan Review and Amendments:
This Plan shall be reviewed and/or amended, if necessary, whenever there is a change in the design of the site. construction, operation, or maintenance which materially affects the site's potential for the discharge of regulated material.

Prediction of Potential Spills:
1. Nearest Navigable Water: East Fork White River
2. Drainage System: The storm water runoff is collected into the proposed storm sewer system, detained in an above ground stormwater detention and SWPP facility near the southwesterly corner of the project. Discharge from this system goes to the existing storm water culverts / storm sewer system under Fall Creek Parkway.
3. Possible Spill Sources (During and post construction): Vehicular sources such as leaking fuel or on, brake fluid, grease, antifreeze; construction trash and debris, biological agents found in trash and debris, fertilizers, household items including but not limited to cleaning agents, chemicals, paint, herbicides and pesticides.
4. Groundwater Contamination: The facility maintains NO above ground or under ground storage tanks at this site. Therefore, it is felt that there is little or no possibility of post construction groundwater contamination. The facility does have city sanitary sewer and city water.

Alert Procedures for Spills:
1. Any personnel observing a spill will immediately instigate the following procedure:
a.) Dialing "0" from any telephone.
b.) Notify the appropriate emergency personnel.
2. The Emergency Coordinator will then take the following actions:
a.) Barricade the area allowing no vehicles to enter or leave the spill zone.
b.) Notify the Indiana Department or Environmental Management. Office of Emergency Response by calling the appropriate telephone number: Office 317–233–7745 / Toll Free 800–233–7745
Also the National Response Center at 800–424–8802 and provide the following information:
–Time of Observation of the spill
–Location of the spill
–Identity of material spilled
–Probable source of the spill
–Probable time of the spill
–Volume of the spill and duration
–Present and anticipated movement of the spill
–Weather conditions
–Personnel at the scene
–Action initiated by personnel
c.) Notify the local Fire Department Phone: 9–1–1
d.) Notify the Marion County Sheriffs Department / City of Indianapolis Police Department (MPD) Phone: 9–1–1
e.) Notify waste recovery contractor, maintenance personnel or other contractual personnel as necessary for cleanup.
f.) Coordinate and monitor cleanup until the situation has been stabilized and all spills have been eliminated.
g.) Cooperate with the IDEM–OER on procedures and reports involved with the event.
Cleanup Parameter,

1. The Owner shall be continually kept informed, maintain lists of qualified contractors and available Vac–trucks, tank pumpers and other equipment readily accessible for clean–up operations. In addition, a continually updated list of available absorbent materials and clean–up supplies should be kept on site.
2. All maintenance personnel will be made aware of techniques for prevention of spills. They will be informed of the requirements and procedures outlined in this plan. They will be kept abreast of current developments or new information on the prevention of spills and / or necessary alterations to this plan.
3. When spills occur which could endanger human life and this becomes primary concern, the discharge of the life saving protection function will be carried out by the local police and fire departments.
4. Absorbent materials, which are used li cleaning up spilled materials, will be disposed of in a manner subject to the approval of the Indiana Department of Environmental Management.
5. Flushing of spilled material with water will not be permitted unless so authorized by the Indiana Department of Environmental Management.

ADDITIONAL STORMWATER POLLUTION PREVENTION MEASURES

Vehicle & Equipment Maintenance

Description and Purpose

Prevent or reduce the contamination of storm water resulting from vehicle and equipment maintenance by running a "dry and clean site". The best option would be to perform maintenance activities at an offsite facility. If this option is not available then work should be performed in designated areas only, while providing cover for materials stored outside, checking for leaks and spills, and containing and cleaning up spills immediately.

Suitable Applications

These procedures are suitable on all construction projects where on onsite yard area is necessary for storage and maintenance of heavy equipment and vehicles.

Limitations

Onsite vehicle and equipment maintenance should only be used where it is impractical to send vehicles and equipment offsite for maintenance and repair. Sending vehicles / equipment offsite should be done in conjunction with a Stabilized Construction Entrance/Exit. Outdoor vehicle or equipment maintenance is a potentially significant source of storm water pollution. Activities that can contaminate storm water include engine repair and service, changing or replacement of fluids, and outdoor equipment storage and parking (engine fluid leaks).

Implementation

If maintenance must occur onsite, use designated areas, located away from drainage courses. Dedicated maintenance areas should be protected from storm water rainfall and runoff, and should be located at least 50 feet from downstream drainage facilities and watercourses.
Drip pans or absorbent pads should be used during vehicle and equipment maintenance work that involves fluids, unless the maintenance work is performed over an impermeable surface in a dedicated maintenance area.
Place a stockpile of spill cleanup materials where it will be readily accessible.
All fueling trucks and fueling areas are required to have spill kits and/or use other spill protection devices.
Use adsorbent materials on small spills. Remove the absorbent materials promptly and dispose of properly.
Inspect onsite vehicles and equipment daily at startup for leaks, and repair immediately.
Keep vehicles and equipment clean; do not allow excessive build–up of oil and grease.
Segregate and recycle wastes, such as greases, used oil or oil filters, antifreeze, cleaning solutions, automotive batteries, hydraulic and transmission fluids. Provide secondary containment and covers for these materials if stored onsite.
Train employees and subcontractors in proper maintenance and spill cleanup procedures.
Drip pans or plastic sheeting should be placed under all vehicles and equipment placed on docks, barges, or other structures over water bodies when the vehicle or equipment is planned to be idle for more than 1 hour.
Properly dispose of used oils, fluids, lubricants, and spill cleanup materials.
Do not place used oil in a dumpster or pour into a storm drain or watercourse. Properly dispose of or recycle used batteries. Do not bury used tires.
Repair leaks of fluids and oil immediately.
Listed below is further information if you must perform vehicle or equipment maintenance on site.

Inspection and Maintenance

Inspect and verify that BMPs are in place prior to the commencement of associated activities. While activities associated with the BMP are under way, inspect weekly to verify continued BMP implementation.
Keep ample supplies of spill cleanup materials onsite. Maintain waste fluid containers in leak proof condition.
Vehicles and equipment should be inspected on each day of use. Leaks should be repaired immediately or the problem vehicle(s) and equipment should be removed from the project site. Inspect equipment for damaged hoses and leaky gaskets routinely. Repair or replaced as needed.

Vehicle and Equipment Fueling

Description and Purpose

Vehicle equipment fueling procedures and practices are designed to prevent fuel spills and leaks, and reduce or eliminate contamination of storm water. This can be accomplished by using offsite facilities, fueling in designated areas only, enclosing or covering stored fuel, implementing spill controls, and training employees and subcontractors in proper fueling procedures.
Limitations
Onsite vehicle and equipment fueling should only be used where it is impractical to send vehicles and equipment offsite for fueling. Sending vehicles and equipment offsite should be done in conjunction with a Stabilized Construction Entrance/ Exit.
Implementation
Use off–site fueling stations as much as possible. These businesses are better equipped to handle fuel and spills properly.
Performing this work off–site can also be economical by eliminating the need for a separate fueling area at a site.
Discourage "topping–off" of fuel tanks.
Absorbent spill cleanup materials and spill kits should be available in fueling areas and on fueling trucks, and should be disposed of properly after use.
Drip pans or absorbent pads should be used during vehicle and equipment fueling, unless the fueling is performed over an impermeable surface in a dedicated fueling area.
Use absorbent materials on small spills. Do not hose down or bury the spill. Remove the adsorbent materials promptly and dispose of properly.
Avoid mobile fueling of mobile construction equipment around the site; rather, transport the equipment to designated fueling areas.
Train employees and subcontractors in proper fueling and cleanup procedures.
Dedicated fueling areas should be protected from storm water run–on and runoff, and should be located at least 50 ft away from downstream drainage facilities and watercourses. Fueling I must be performed on level–grade areas.
Protect fueling areas with berms and dikes to prevent runon, runoff, and to contain spills.
Nozzles used in vehicle and equipment fueling should be equipped with an automatic shutoff to control drips. Fueling operations should not be left unattended.
Federal, state, and local requirements should be observed for any stationary above ground storage tanks.
Inspection and Maintenance

Vehicles and equipment should be inspected each day of use for leaks. Leaks should be repaired immediately or problem vehicles or equipment should be removed from the project site.

Keep ample supplies of spill cleanup materials onsite.

Immediately clean up spills and properly dispose of contaminated soil and cleanup materials.

Solid Waste Management

Description and Purpose

Solid waste management procedures and practices are designed to prevent or reduce the discharge of pollutants to storm water from solid or construction waste by providing designated waste collection areas and containers, arranging for regular disposal, and training employees and subcontractors.
Suitable Applications
BMP is suitable for construction sites where the following wastes are generated or stored:
Solid waste generated from trees and shrubs removed during land clearing, demolition of existing structures (rubble), and building construction

Packaging materials including wood, paper, and plastic
Scrap or surplus building materials including scrap metals, rubber, plastic, glass pieces and masonry products
Domestic wastes including food containers such as beverage cups, coffee cups, paper bags, plastic wrappers, and cigarettes
Construction wastes including brick, mortar, timber, steel and metal scraps, pipe and electrical cuttings, non–hazardous equipment parts, Styrofoam and other materials send transport and package construction materials
Implementation
The following steps will help keep a clean site and reduce storm water pollution: Select designated waste collection areas onsite.
Inform trash–hauling contractors that you will accept only waterlight dumpsters for onsite use.
Inspect dumpsters for leaks and repair any dumpster that is not waterlight.
Provide an adequate number of containers with lids or covers that can be placed over the container to keep rain out or to prevent loss of wastes when it is windy.
Plan for additional containers and more frequent pickup during the demolition phase of construction.
Collect site trash daily, especially during rainy and windy conditions.
Remove this solid waste promptly since erosion and sediment control devices tend to collect litter.
Make sure that toxic liquid wastes (used oils, solvents, and paints) and chemicals (acids, pesticides, additives, curing compounds) are not disposed of in dumpsters designated for construction debris.
Do not hose out dumpsters on the construction site. Leave dumpster cleaning to the trash hauling contractor.
Arrange for regular waste collection before containers overflow area up immediately if a container does spill.
Make sure that construction waste is collected, removed, and disposed of only at authorized disposal areas.

Collection, Storage and Disposal

Littering on the project site should be prohibited.
To prevent clogging of the storm drainage system litter and debris removal from drainage grates, trash racks, and ditch lines should be a priority.
Trash receptacles should be provided in the contractor's yard, field trailer areas, and at locations where workers congregate for lunch and break periods.
Litter from work areas within the construction limits of the project site should be collected and placed in waterlight dumpsters at least weekly, regardless of whether the litter was generated by the contractor, the public, or others. Collected litter and debris should not be placed in or next to drain inlets, storm water drainage systems, or watercourses.
Dumpsters of sufficient size and number should be provided to contain the solid waste generated by the project.
Full dumpsters should be removed from the project site and the contents should be disposed of by the trash hauling contractor.
Construction debris and waste should be removed from the site biweekly or more frequently as needed.
Construction materials visible to the public should be stored or stacked in an orderly manner.
Storm water runon should be prevented from contacting stored solid waste through the use of berms, dikes, or other temporary diversion structures or through the use of measures to elevate waste from site surfaces.
Solid waste storage areas should be located at least 50 ft from drainage facilities and watercourses and should not be located in areas prone to flooding or ponding.
Inspection and Maintenance
Inspect and verify that activity–based BMPs are in place prior to the commencement of associated activities. While activities associated with the BMP are under way, inspect weekly to verify continued BMP implementation.
Inspect BMPs subject to non–storm water discharge daily while non–storm water discharges occur
Inspect construction waste area regularly.
Arrange for regular waste collection.

Concrete Washout

The following steps will help reduce storm water pollution from concrete wastes:
Discuss the concrete management techniques described in this BMP (such as handling of concrete waste and washout) with the ready–mix concrete supplier before any deliveries are made.
Incorporate requirements for concrete waste management into material supplier and subcontractor agreements.
Store dry and wet materials under cover, away from drainage areas.
Avoid mixing excess amounts of fresh concrete.
Perform washout of concrete trucks offsite or in designated areas only.
Do not wash out concrete trucks into storm drains, open ditches, streets, or streams.
Do not allow excess concrete to be dumped on–site, except in designated areas.
For onsite washout:
–Locate washout area at least 50 feet from storm drains, open drains, or water bodies.
–Do not allow excess concrete to be dumped on–site, except in designated areas.
–Washout wastes into the temporary pit where the concrete can set, be broken up, and then disposed properly.
–Avoid creating runoff by draining water to a berme4d area or level area when washing concrete to remove fine particles and expose the aggregate.
–Do not wash sweepings from exposed aggregate concrete into the street or storm drain. Collect and return sweepings to aggregate base stockpile or dispose in the trash.
Make sure that toxic liquid wastes (used oils, solvents, and paints) and chemicals (acids, pesticides, additives, curing compounds) are not disposed of in dumpsters designated for construction debris.
Do not hose out dumpsters on the construction site. Leave dumpster cleaning to the trash hauling contractor.
Arrange for regular waste collection before containers overflow area up immediately if a container does spill.
Make sure that construction waste is collected, removed, and disposed of only at authorized disposal areas.

B14 Sheet C302

B15 DNA

C1 Pollutants expected during the post–construction sequence may include, but are not limited to, petroleum products such as fuels, lubricants and solvents, organic and non–organic chemicals and chemical compounds (both volatile and non–volatile), chemical fertilizers, vegatation/weed killers (both general and specific). Most of the "pollutants" would either be deposited and retained in the grass strips and swales and be rendered inert by exposure to the air and sunlight. "Pollutants" carried on particulates through the storm water collection system would be slowed when entering the detention area system (shown on Sheet C301–C302) where they will either deposit in the catch basins or in the underground detention facility.

C2 All water quality practices will be installed during the normal course of construction.

C3 The post construction water quality facilities consist of the proposed catch basins and underground storm water detention facility as shown on the Site Grading Plan, Site Utility Plan and Erosion Control Plan

C4 Sheet C401

C5 It is recommended that the BMP (storm catch basins and proposed underground storm water detention facility) and downstream outlet facilities be visually inspected weekly for obvious signs of pollutants, including discolored solids and retained water. It is further recommended that a bi–monthly test be obtained of the water in the catch basin and underground detention facility (BMP) and the silts that may be detected in Strs #101 for siltation pollution.

GENERAL INFORMATION

The site is proposed to be an addition to a licensed nursing home facility and added parking. This project phase includes the construction of the building and connecting infrastructure, including parking areas, public utility facilities, driveways, storm sewers, sanitary sewer service lines, and appurtenant facilities to the proposed medical arts building.

There is no permanent stockpile proposed.

PROJECT DESCRIPTION

Homeview Healthcare and Rehabilitation Center is proposed for a site located at the southeasterly quadrant of State Street and Palmer Street. in the City of Franklin, Johnson County It is located in a PART OF THE NORTHEAST QUARTER OF SECTION 23 AND THE NORTHWEST QUARTER OF SECTION 24, TOWNSHIP 12 NORTH, RANGE 4 EAST IN JOHNSON COUNTY, INDIANA, at Latitude 39 degrees, 28 Minutes, 274 Seconds North, and Longitude 86 degrees, 02 minutes, 42 seconds West.

Runoff from this site is collected into a storm sewers and directed through a planned BMP facility through a planned storm water quality and storm water detention facility and into an existing storm sewer system under the maintenance of the City of Franklin. The eventual outlet of the storm water collection system is Hurricane Creek.

Homeview Healthcare and Rehabilitation Center
Best Management Practice (BMP)
Operations and Maintenance Manual

Facility Owner (FO):
Homeview Healthcare Operations Company, LLC
1800 North Wabash Road
Marion, Indiana 46952
Contact Person(s):
Jesse Ott
754–664–5400

The Facility Owner (FO), assigns or their designees shall periodically inspect the facility. Suggested inspection periods are once a month or after an incremental rainfall total of 1 inch or more. The FO shall use the Inspection Checklist (IC) (follows) as a guide for items to be inspected.

The FO shall maintain a record of inspections that includes copies of the IC, remedial efforts, if any, and costs for inspection and maintenance. This record shall be available for review in the main office of the FO.

The IC shall generally include, but is not necessarily limited to, these general maintenance requirements:

Area Inlets / BMP Area

1. Inspect each structure casting (inlets and catch basins) for accumulated trash and litter. Inspect inside each structure for accumulation of trash, silts, gravels and other small particulates.

2. Trash and litter shall be removed to prevent clogging of the structure castings. Trash that may accumulate in the structures shall be removed. The level of silts, gravels and other small particulates shall be monitored in each catch basin (Structures #101,

Detention Area

1. Inspect SWPP facility by to determine for any trash and accumulating silt. If the accumulating silt reaches the mark denoting cleaning, it shall be cleaned out to the level of the hard bottom. Also, pay special attention to the control structure (Str #103) and check for accumulation of trash, silt and other materials that may cause the facility to not function.

2. Trash and litter shall be removed to prevent clogging.

Indiana 811
Know what's below. Call before you dig.

Natural Resources Conservation Service
Web Soil Survey
National Cooperative Soil Survey
8/18/2016
Page 1 of 3

Map Unit Legend

Johnson County, Indiana (IN081)			
Map Unit Symbol	Map Unit Name	Acres in AOI	Percent of AOI
Br	Brookston silty clay loam, 0 to 2 percent slopes	0.8	18.9%
CrA	Crosby silt loam, fine-loamy subsoil, 0 to 2 percent slopes	3.2	81.1%
Totals for Area of Interest		4.0	100.0%

Johnson County, Indiana

Br—Brookston silty clay loam, 0 to 2 percent slopes

Map Unit Setting
National map unit symbol: 2t98n
Elevation: 600 to 1,260 feet
Mean annual precipitation: 37 to 46 inches
Mean annual air temperature: 48 to 55 degrees F
Frost-free period: 145 to 180 days
Farmland classification: Prime farmland if drained

Map Unit Composition
Brookston and similar soils: 95 percent
Minor components: 5 percent
Estimates are based on observations, descriptions, and transects of the mapunit.

Description of Brookston

Setting
Landform: Depressions, till plains
Landform position (two-dimensional): Toeslope
Landform position (three-dimensional): Dip
Down-slope shape: Concave, linear
Across-slope shape: Concave
Parent material: Loess over loamy till

Typical profile
Ap - 0 to 16 inches: silty clay loam
Btg1 - 16 to 32 inches: silty clay loam
Btg2 - 32 to 44 inches: loam
C - 44 to 60 inches: loam

Properties and qualities
Slope: 0 to 2 percent
Depth to restrictive feature: More than 80 inches
Natural drainage class: Poorly drained
Runoff class: Negligible
Capacity of the most limiting layer to transmit water (Ksat): Moderately high (0.20 to 0.60 in/hr)
Depth to water table: About 0 to 12 inches
Frequency of flooding: None
Frequency of ponding: Frequent
Calcium carbonate, maximum in profile: 40 percent
Salinity, maximum in profile: Nonsaline to very slightly saline (0.0 to 2.0 mmhos/cm)
Available water storage in profile: Moderate (about 8.9 inches)

Interpretive groups
Land capability classification (irrigated): None specified
Land capability classification (nonirrigated): 2w
Hydrologic Soil Group: B/D
Hydric soil rating: Yes

Minor Components

Crosby
Percent of map unit: 5 percent
Landform: Till plains
Landform position (two-dimensional): Footslope, summit
Landform position (three-dimensional): Talf
Down-slope shape: Concave
Across-slope shape: Linear
Hydric soil rating: No

Data Source Information

Soil Survey Area: Johnson County, Indiana
Survey Area Data: Version 23, Sep 9, 2015

Johnson County, Indiana

CrA—Crosby silt loam, fine-loamy subsoil, 0 to 2 percent slopes

Map Unit Setting
National map unit symbol: 2thy4
Elevation: 600 to 1,000 feet
Mean annual precipitation: 36 to 44 inches
Mean annual air temperature: 49 to 54 degrees F
Frost-free period: 145 to 180 days
Farmland classification: Prime farmland if drained

Map Unit Composition
Crosby and similar soils: 93 percent
Minor components: 7 percent
Estimates are based on observations, descriptions, and transects of the mapunit.

Description of Crosby

Setting
Landform: Ground moraines, recessionial moraines, water-lain moraines
Landform position (two-dimensional): Summit, backslope, footslope
Landform position (three-dimensional): Interfluve, rise
Down-slope shape: Convex, linear
Across-slope shape: Linear, convex
Parent material: Silty material or loess over loamy till

Typical profile
Ap - 0 to 10 inches: silt loam
Btg - 10 to 17 inches: silty clay loam
2Bt - 17 to 29 inches: clay loam
2BCt - 29 to 36 inches: loam
2Cd - 36 to 79 inches: loam

Properties and qualities
Slope: 0 to 2 percent
Depth to restrictive feature: 24 to 40 inches to densic material
Natural drainage class: Somewhat poorly drained
Runoff class: Medium
Capacity of the most limiting layer to transmit water (Ksat): Low to moderately high (0.01 to 0.20 in/hr)
Depth to water table: About 6 to 24 inches
Frequency of flooding: None
Frequency of ponding: None
Calcium carbonate, maximum in profile: 55 percent
Salinity, maximum in profile: Nonsaline to very slightly saline (0.0 to 2.0 mmhos/cm)
Available water storage in profile: Moderate (about 6.5 inches)

Interpretive groups
Land capability classification (irrigated): None specified
Land capability classification (nonirrigated): 2w
Hydrologic Soil Group: C/D
Hydric soil rating: No

Minor Components

Williamstown, eroded
Percent of map unit: 5 percent
Landform: Ground moraines, recessionial moraines, water-lain moraines
Landform position (two-dimensional): Summit, shoulder, backslope
Landform position (three-dimensional): Crest, head slope, nose slope, side slope, rise
Down-slope shape: Convex, linear
Across-slope shape: Linear, convex
Hydric soil rating: No

Treaty, drained
Percent of map unit: 2 percent
Landform: Depressions, swales, water-lain moraines
Landform position (two-dimensional): Toeslope, footslope
Landform position (three-dimensional): Base slope, dip
Down-slope shape: Linear
Across-slope shape: Concave
Hydric soil rating: Yes

Data Source Information

Soil Survey Area: Johnson County, Indiana
Survey Area Data: Version 23, Sep 9, 2015

North

Scale: none

landfocus CONSULTING
LANDFOCUSCONSULTING.COM
P. O. Box 67, Pendleton, IN 46064
info@landfocusconsulting.com
w 765.778.4540 f 765.778.3571

Client
Homeview Center of Franklin
1800 N. Wabahs Ave
Marion, Indiana 46952
Tel. 765-664-5400

Date
08.19.2016

Revision

Date

Project
Homeview Health & Rehabilitation Center
651 S. State Street
City of Franklin, Johnson County, Indiana

Sheet Title
Site Erosion Control Plan
Regulatory Information

Sheet No.
C304
of 15
Civil Sheets

G:\TLC\Franklin\Building Addition\Final\C300 C304 SEcDetail Sheets.dwg, C304 SEcP Regulatory, 8/20/2016 3:11:28 PM

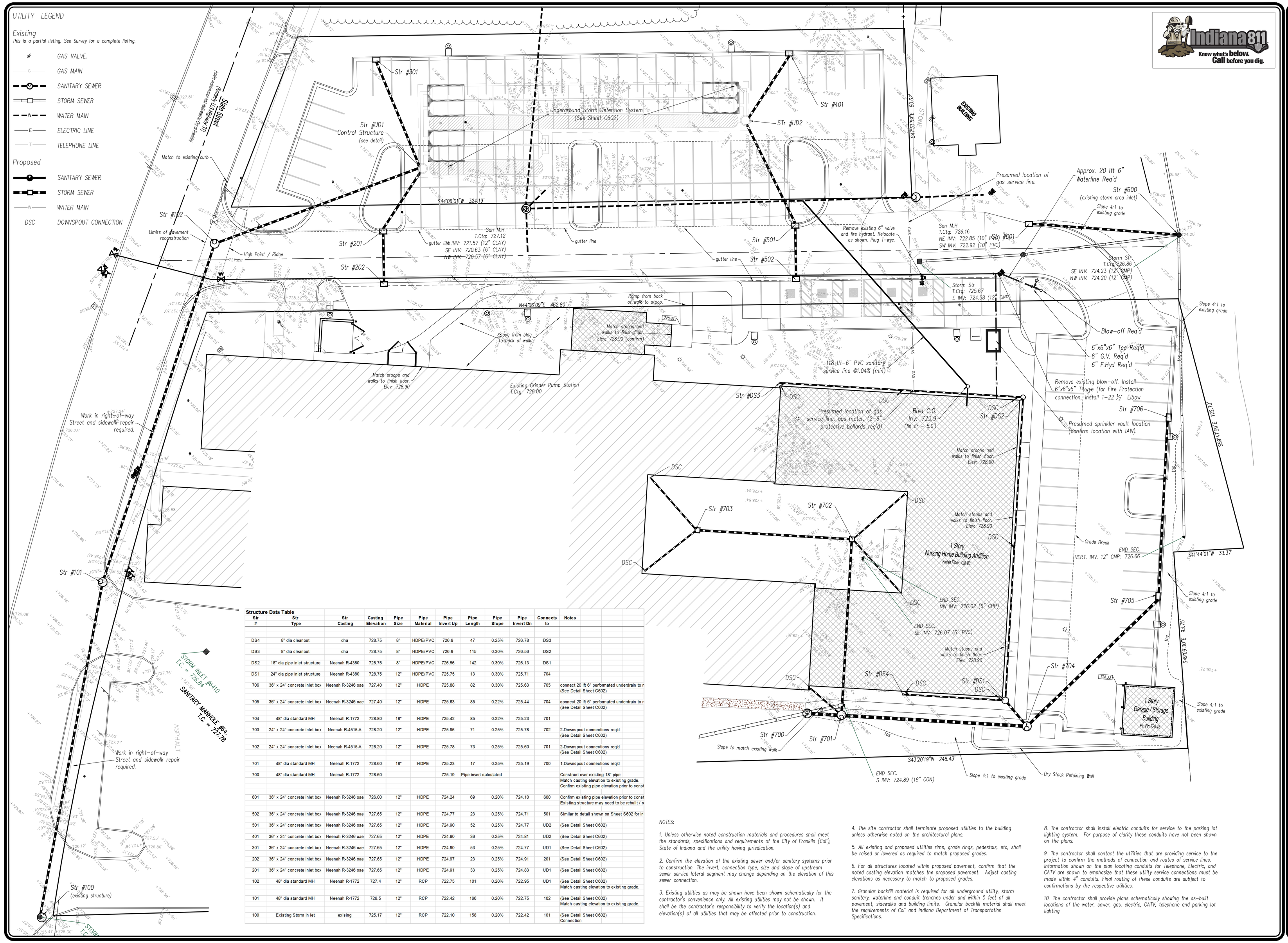

Structure Data Table

Str #	Str Type	Str Casting	Casting Elevation	Pipe Size	Pipe Material	Pipe Invert Up	Pipe Length	Pipe Slope	Pipe Invert Dn	Connects to	Notes
DS4	8" dia cleanout	dna	728.75	8"	HDPE/PVC	726.9	47	0.25%	726.78	DS3	
DS3	8" dia cleanout	dna	728.75	8"	HDPE/PVC	726.9	115	0.30%	726.56	DS2	
DS2	18" dia pipe inlet structure	Neenah R-4380	728.75	8"	HDPE/PVC	726.56	142	0.30%	726.13	DS1	
DS1	24" dia pipe inlet structure	Neenah R-4380	728.75	12"	HDPE/PVC	725.75	13	0.30%	725.71	704	
706	36" x 24" concrete inlet box	Neenah R-3246 oae	727.40	12"	HDPE	725.88	82	0.30%	725.63	705	connect 20 lft 6" perforated underdrain to n (See Detail Sheet C602)
705	36" x 24" concrete inlet box	Neenah R-3246 oae	727.40	12"	HDPE	725.63	85	0.22%	725.44	704	connect 20 lft 6" perforated underdrain to n (See Detail Sheet C602)
704	48" dia standard MH	Neenah R-1772	728.80	18"	HDPE	725.42	85	0.22%	725.23	701	
703	24" x 24" concrete inlet box	Neenah R-4515-A	728.20	12"	HDPE	725.96	71	0.25%	725.78	702	2-Downspout connections req'd (See Detail Sheet C602)
702	24" x 24" concrete inlet box	Neenah R-4515-A	728.20	12"	HDPE	725.78	73	0.25%	725.60	701	2-Downspout connections req'd (See Detail Sheet C602)
701	48" dia standard MH	Neenah R-1772	728.60	18"	HDPE	725.23	17	0.25%	725.19	700	1-Downspout connections req'd
700	48" dia standard MH	Neenah R-1772	728.60			725.19	Pipe invert calculated				Construct over existing 18" pipe Match casting elevation to existing grade. Confirm existing pipe elevation prior to const
601	36" x 24" concrete inlet box	Neenah R-3246 oae	726.00	12"	HDPE	724.24	69	0.20%	724.10	600	Confirm existing pipe elevation prior to const Existing structure may need to be rebuilt / n
502	36" x 24" concrete inlet box	Neenah R-3246 oae	727.65	12"	HDPE	724.77	23	0.25%	724.71	501	Similar to detail shown on Sheet S602 for in
501	36" x 24" concrete inlet box	Neenah R-3246 oae	727.65	12"	HDPE	724.90	52	0.25%	724.77	UD2	(See Detail Sheet C602)
401	36" x 24" concrete inlet box	Neenah R-3246 oae	727.65	12"	HDPE	724.90	36	0.25%	724.81	UD2	(See Detail Sheet C602)
301	36" x 24" concrete inlet box	Neenah R-3246 oae	727.65	12"	HDPE	724.90	53	0.25%	724.77	UD1	(See Detail Sheet C602)
202	36" x 24" concrete inlet box	Neenah R-3246 oae	727.65	12"	HDPE	724.97	23	0.25%	724.91	201	(See Detail Sheet C602)
201	36" x 24" concrete inlet box	Neenah R-3246 oae	727.65	12"	HDPE	724.91	33	0.25%	724.83	UD1	(See Detail Sheet C602)
102	48" dia standard MH	Neenah R-1772	727.4	12"	RCP	722.75	101	0.20%	722.95	UD1	(See Detail Sheet C602) Match casting elevation to existing grade.
101	48" dia standard MH	Neenah R-1772	726.5	12"	RCP	722.42	166	0.20%	722.75	102	(See Detail Sheet C602) Match casting elevation to existing grade.
100	Existing Storm In let	exising	725.17	12"	RCP	722.10	158	0.20%	722.42	101	(See Detail Sheet C602) Connection

NOTES:

1. Unless otherwise noted construction materials and procedures shall meet the standards, specifications and requirements of the City of Franklin (CoF), State of Indiana and the utility having jurisdiction.

2. Confirm the elevation of the existing sewer and/or sanitary systems prior to construction. The invert, connection type, size and slope of upstream sewer service lateral segment may change depending on the elevation of this sewer connection.

3. Existing utilities as may be shown have been shown schematically for the contractor's convenience only. All existing utilities may not be shown. It shall be the contractor's responsibility to verify the location(s) and elevation(s) of all utilities that may be affected prior to construction.

4. The site contractor shall terminate proposed utilities to the building unless otherwise noted on the architectural plans.

5. All existing and proposed utilities rims, grade rings, pedestals, etc, shall be raised or lowered as required to match proposed grades.

6. For all structures located within proposed pavement, confirm that the noted casting elevation matches the proposed pavement. Adjust casting elevations as necessary to match to proposed grades.

7. Granular backfill material is required for all underground utility, storm sanitary, waterline and conduit trenches under and within 5 feet of all pavement, sidewalks and building limits. Granular backfill material shall meet the requirements of CoF and Indiana Department of Transportation Specifications.

8. The contractor shall install electric conduits for service to the parking lot lighting system. For purpose of clarity these conduits have not been shown on the plans.

9. The contractor shall contact the utilities that are providing service to the project to confirm the methods of connection and routes of service lines. Information shown on the plan locating conduits for Telephone, Electric, and CATV are shown to emphasize that these utility service connections must be made within 4" conduits. Final routing of these conduits are subject to confirmations by the respective utilities.

10. The contractor shall provide plans schematically showing the as-built locations of the water, sewer, gas, electric, CATV, telephone and parking lot lighting.

North

Scale: 1"= 20'

landfocus CONSULTING
LANDFOCUSCONSULTING.COM
P. O. Box 67, Pendleton, IN 46064
info@landfocusconsulting.com
w 765.778.4540 f 765.778.3371

Client
Homeview Center of Franklin
1800 N. Wabahs Ave
Marion, Indiana 46952
Tel. 765-664-5400

Date 08.19.2016

Date	Revision

Project
Homeview Health & Rehabilitation Center
651 S. State Street
City of Franklin, Johnson County, Indiana

Sheet Title
Site Utility Plan

Sheet No.
C501
of 15 Civil Sheets

G:\TLCF\Franklin\Building Addition\Final\C501 SUP.dwg, Layout1, 8/20/2016 7:00:53 PM

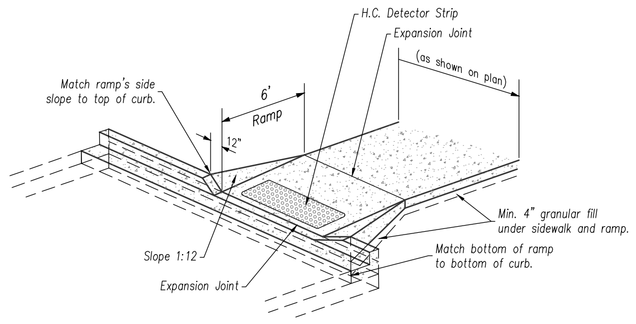

Isometric

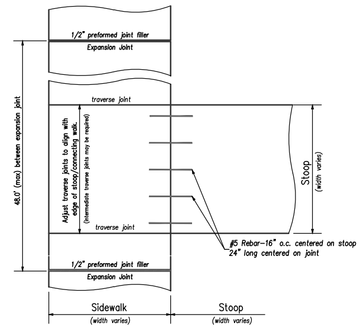

Stoop-Sidewalk Connection nts

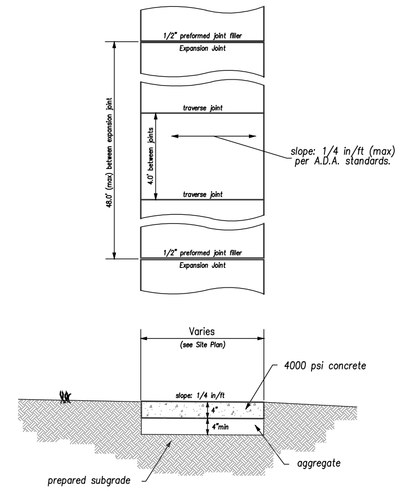

Concrete Sidewalk nts

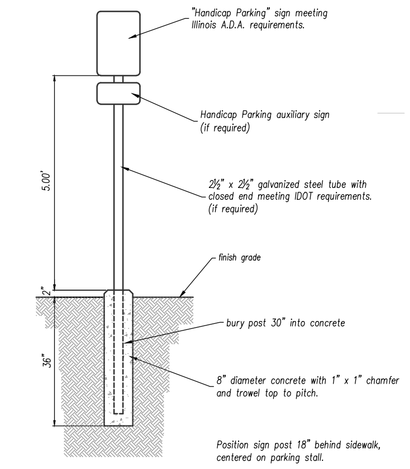

Handicap Parking Sign Detail nts

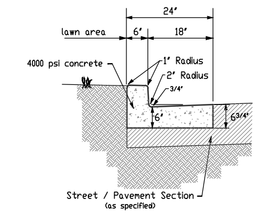

Combined Curb & Gutter
Type II

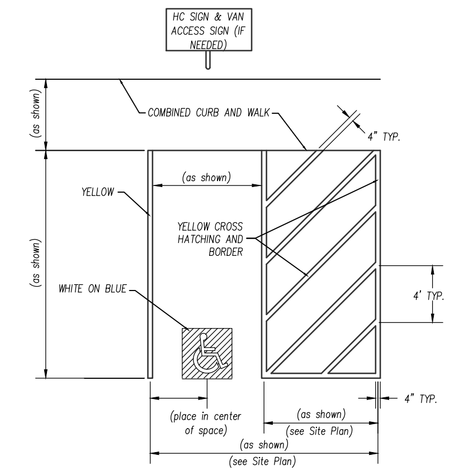

Handicap Parking
Space Markings

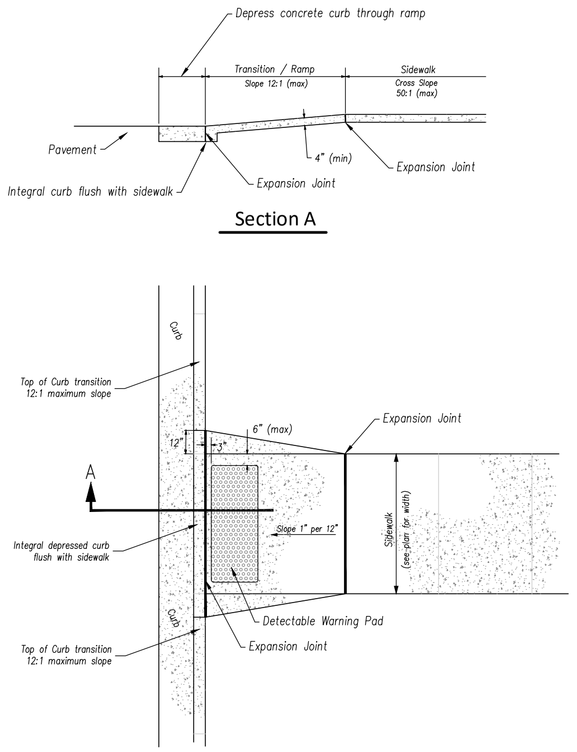

Plan

Handicap Ramp Detail nts
Handicap Ramp Type 3

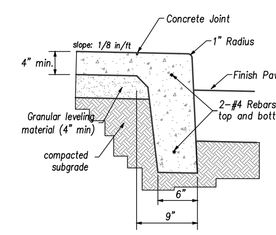

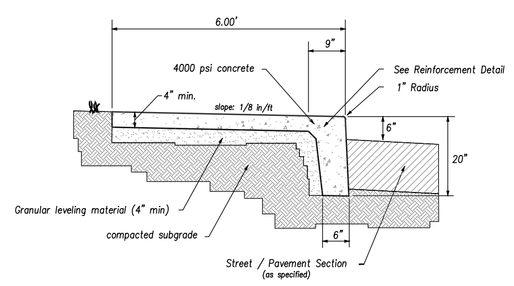

Curb and Walk

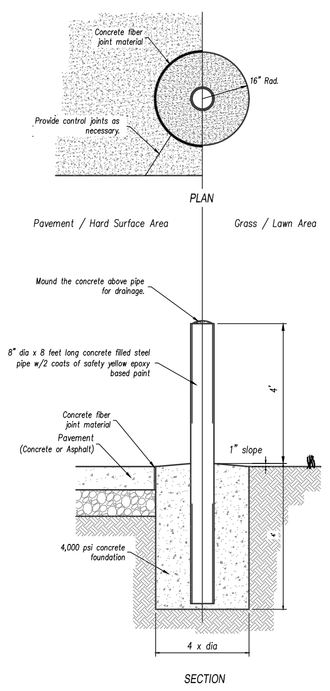

Bollard Detail nts
Grass or Pavement Area

NOTES FOR ACCESSIBLE PARKING SPACES:

1. EACH PARKING SPACE GEOMETRY SHALL BE AS SHOWN ON THE SITE LOCATION PLAN.
2. ADJACENT ACCESSIBLE PARKING SHALL NOT SHARE A COMMON ACCESS AISLE.
3. SIGNS SHALL BE VERTICALLY MOUNTED ON A PERMANENT POST OR A WALL AT THE FRONTCENTER BETWEEN THE SPACE AND THE ACCESS AISLE NO MORE THAN 18" BEHIND THE CURB AND WALK AND SET A MINIMUM OF 5' FROM THE FINISHED GRADE TO THE BOTTOM OF THE "VAN ACCESSIBLE" SIGN (IF ANY) AND 6' FROM THE FINISHED GRADE TO THE BOTTOM OF THE "RESERVED PARKING" SIGN.

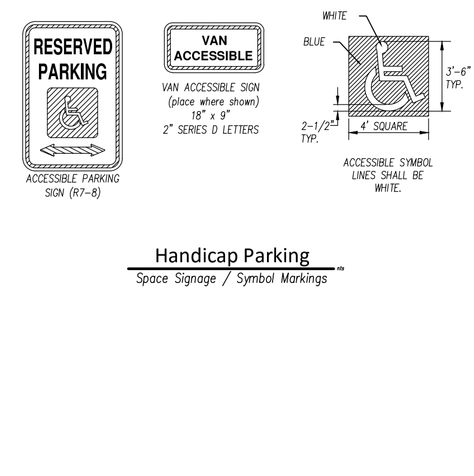

Handicap Parking
Space Signage / Symbol Markings

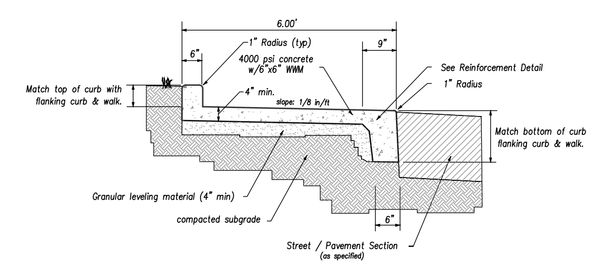

Curb and Walk Section Through Type I Handicap Ramps

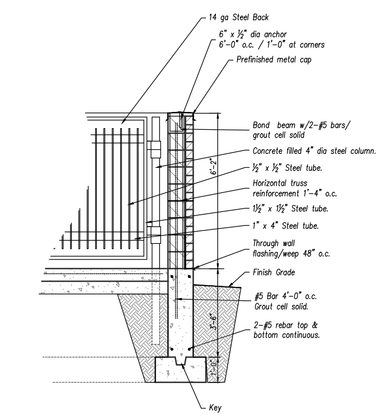

Trash Enclosure / Loading Zone Section/Elevation nts

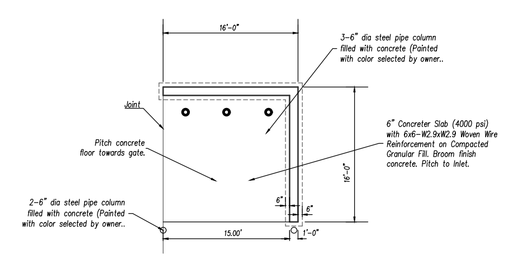

Trash Enclosure Foundation nts

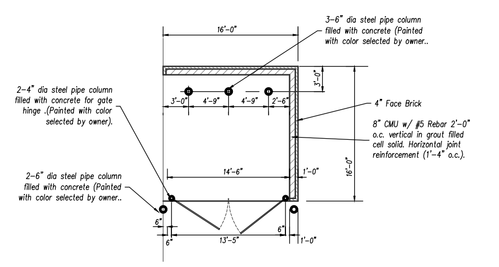

Trash Enclosure / Loading Zone Section/Elevation nts

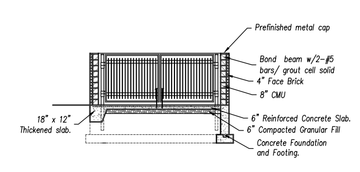

Trash Enclosure / Loading Zone Section/Elevation nts

Trash Enclosure Detail

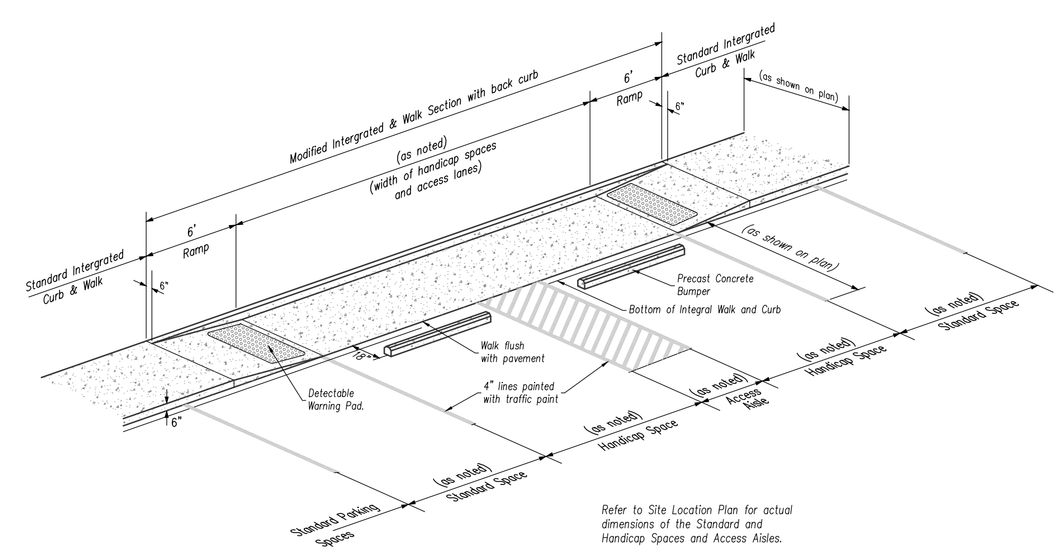

Handicap Parking Spaces nts
Handicap Ramp Type 1

Indiana 811 Know what's below. Call before you dig.

North

Scale: none

landfocus CONSULTING
LANDFOCUSCONSULTING.COM
P. O. Box 67, Pendleton, IN 46064
info@landfocusconsulting.com
w 765.778.4540 f 765.778.3571

Client
Homeview Center of Franklin
1800 N. Wabahs Ave
Marion, Indiana 46952
Tel. 765-664-5400

Date 08.19.2016

Revision

Date

Project
Homeview Health & Rehabilitation Center
651 S. State Street
City of Franklin, Johnson County, Indiana

Sheet Title
General Site Details

Sheet No.
C601
of 15 Civil Sheets

G:\TLC\Franklin\Building Addition\Final\C601 C602 Detail Sheets.dwg, C601 General Details, 8/21/2016 9:58:01 AM

North

Scale: none

landfocus CONSULTING
LANDFOCUSCONSULTING.COM
P. O. Box 67, Pendleton, IN 46064
info@landfocusconsulting.com
w 765.778.4540 f 765.778.3571

Client
Homeview Center of Franklin
1800 N. Wabahs Ave
Marion, Indiana 46952
Tel. 765-664-5400

Date: 08.19.2016

Revision | Date

Project
Homeview Health & Rehabilitation Center
651 S. State Street
City of Franklin, Johnson County, Indiana

Sheet Title
Site Detail
Regulatory Information

Sheet No. **C602** of 15 Civil Sheets

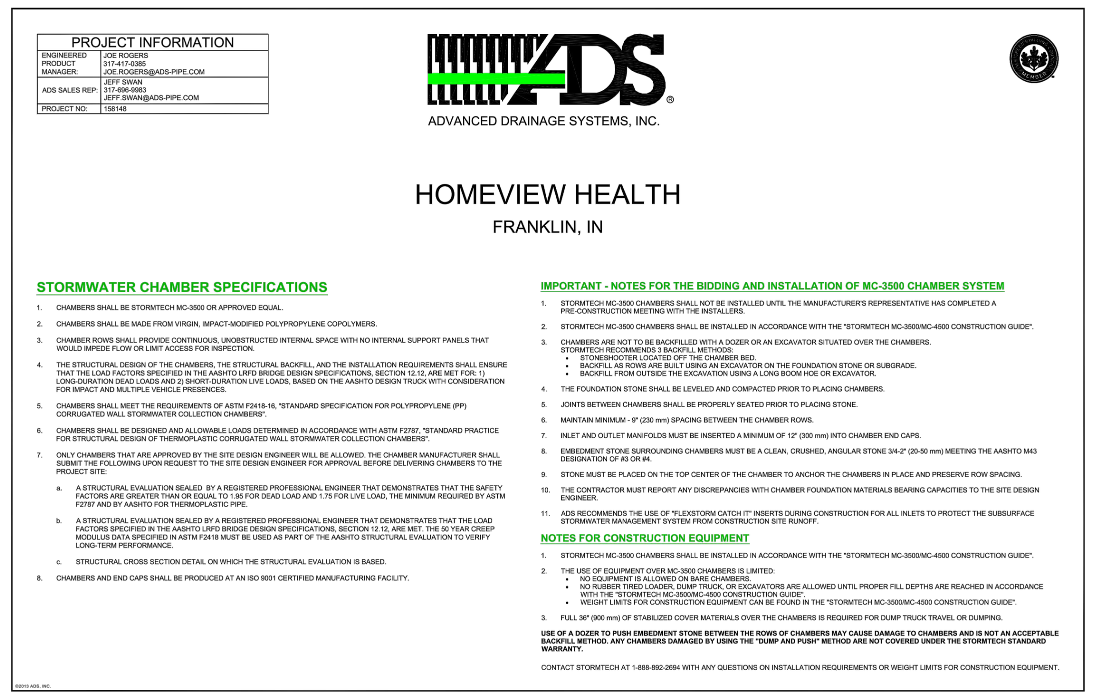

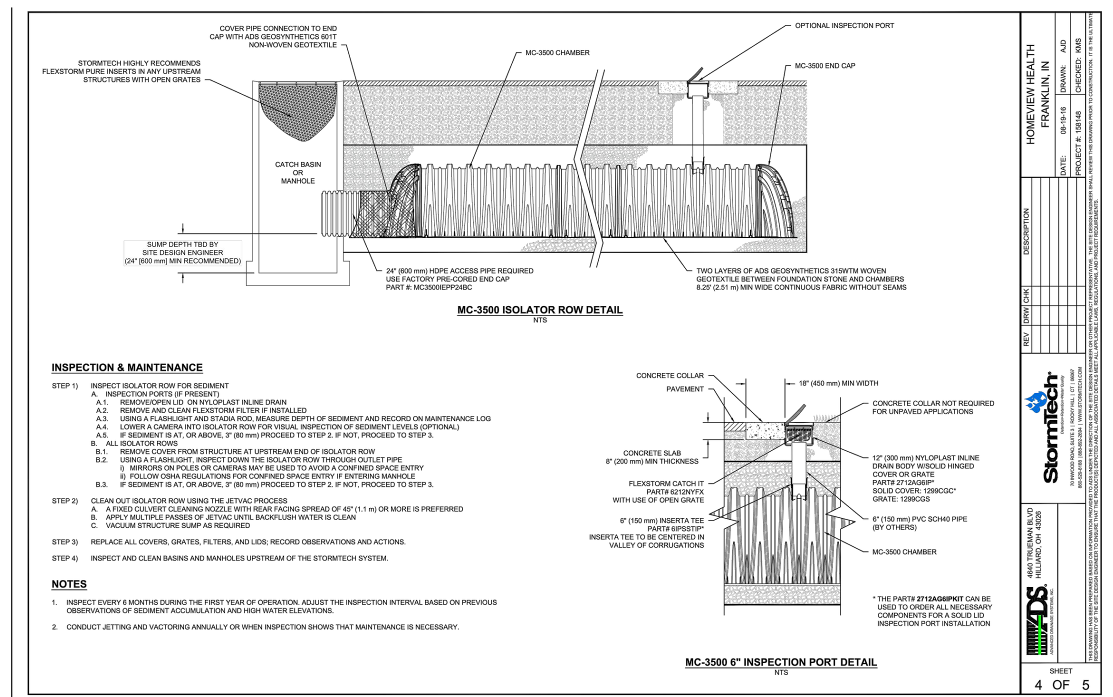

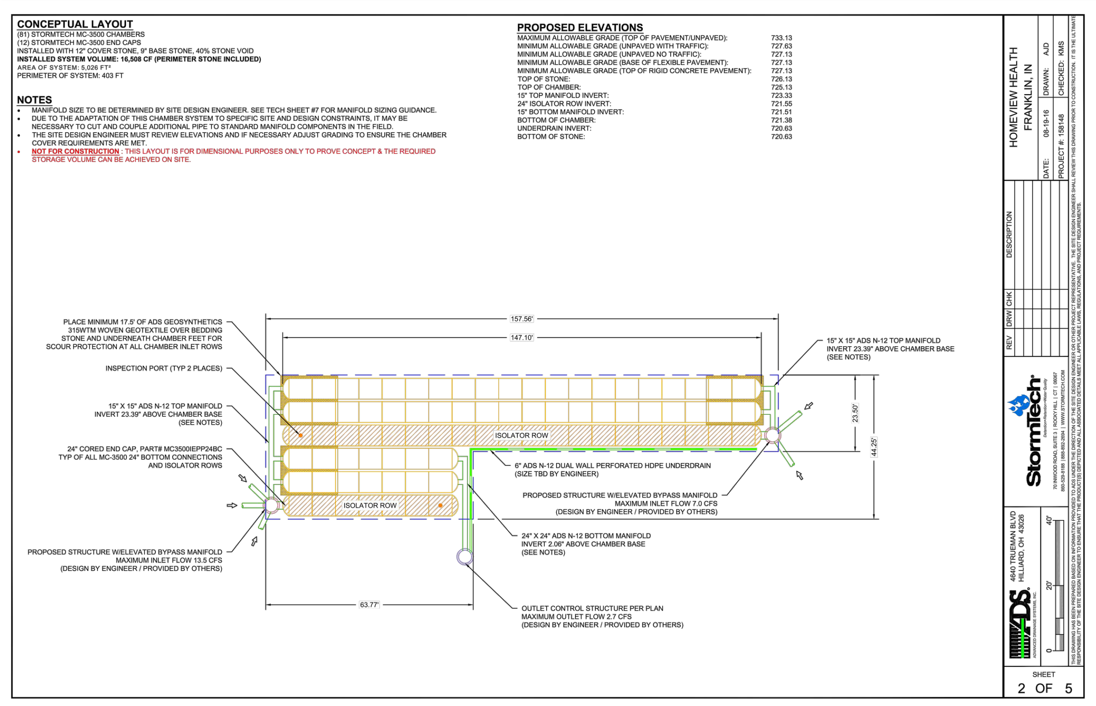

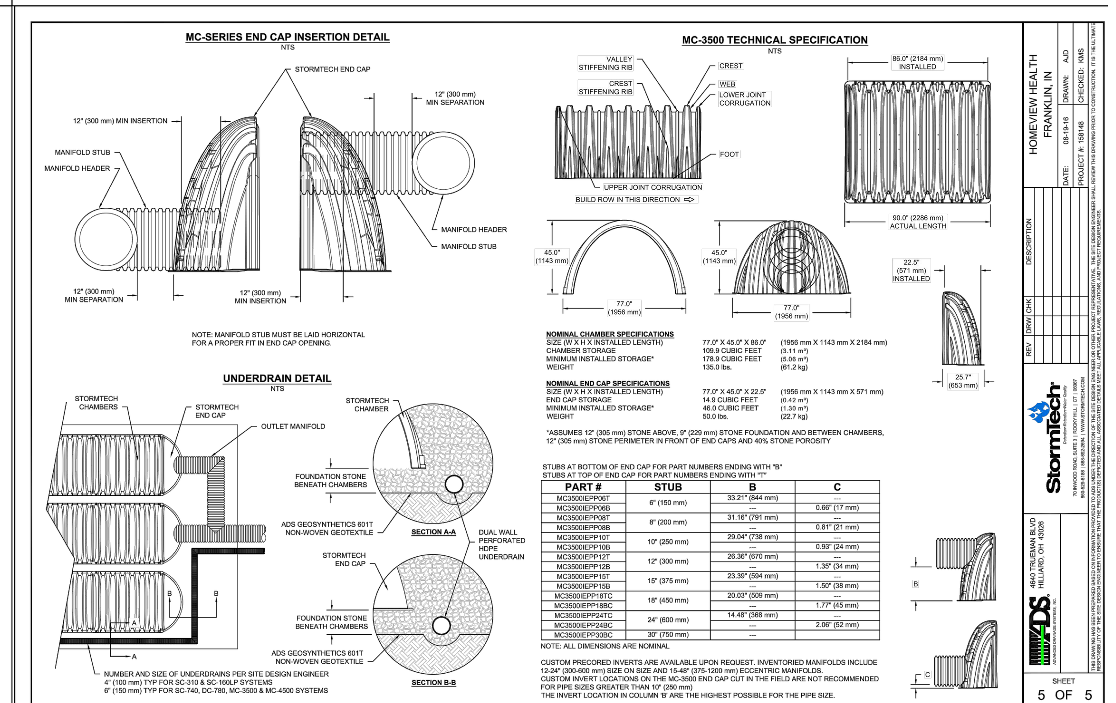

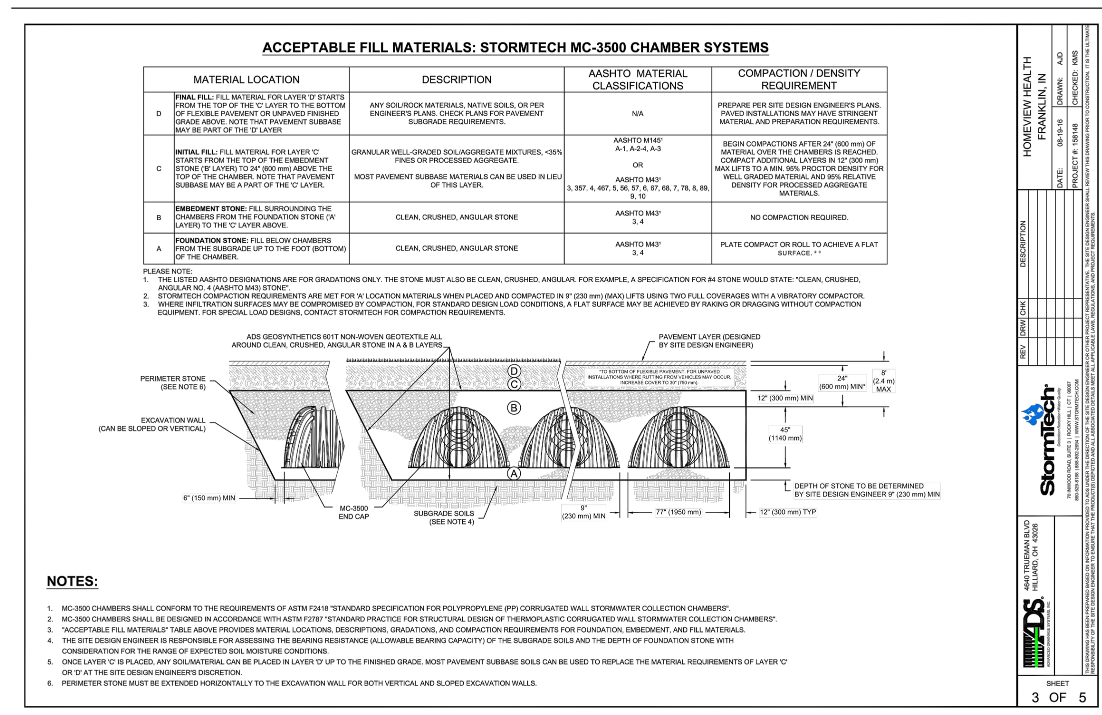

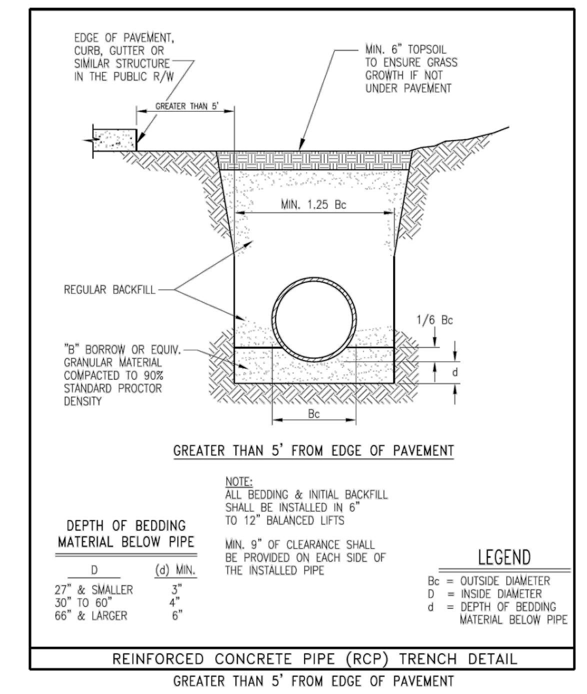

City of Indianapolis Stormwater Specifications Manual — Appendix page A5-15, Janurary 2011 - FINAL

FIGURE 501-08: Reinforce Concrete Pipe (RCP) Trench Detail

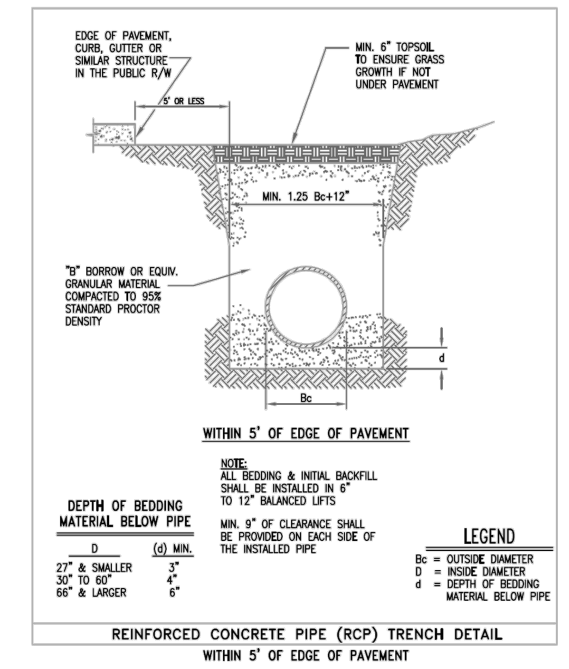

City of Indianapolis Stormwater Specifications Manual — Appendix page A5-14, Janurary 2011 - FINAL

FIGURE 501-07: Reinforced Concrete Pipe (RCP) Trench Detail

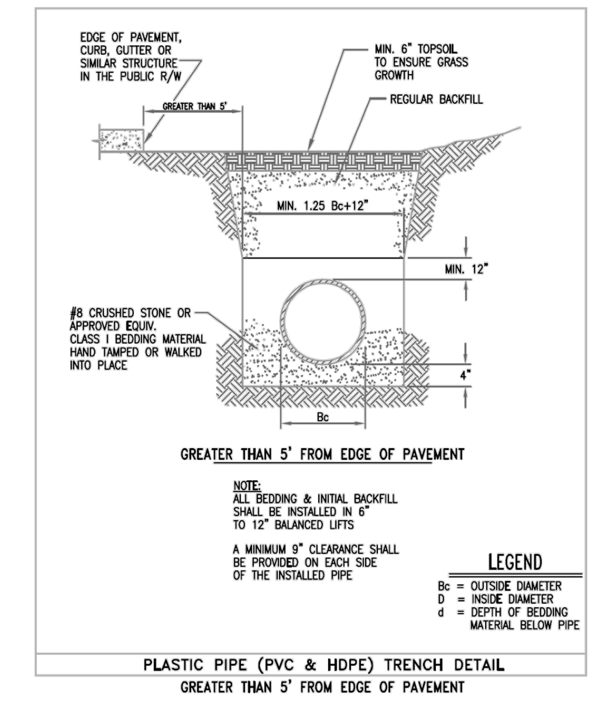

City of Indianapolis Stormwater Specifications Manual — Appendix page A5-13, Janurary 2011 - FINAL

FIGURE 501-06: Plastic Pipe (PVC & HDPE) Trench Detail

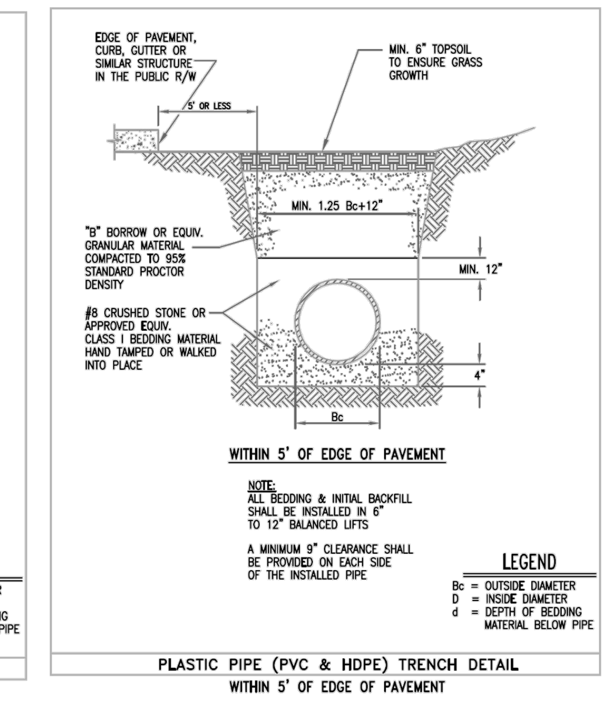

City of Indianapolis Stormwater Specifications Manual — Appendix page A5-12, Janurary 2011 - FINAL

FIGURE 501-05: Plastic Pipe (PVC & HDPE) Trench Detail

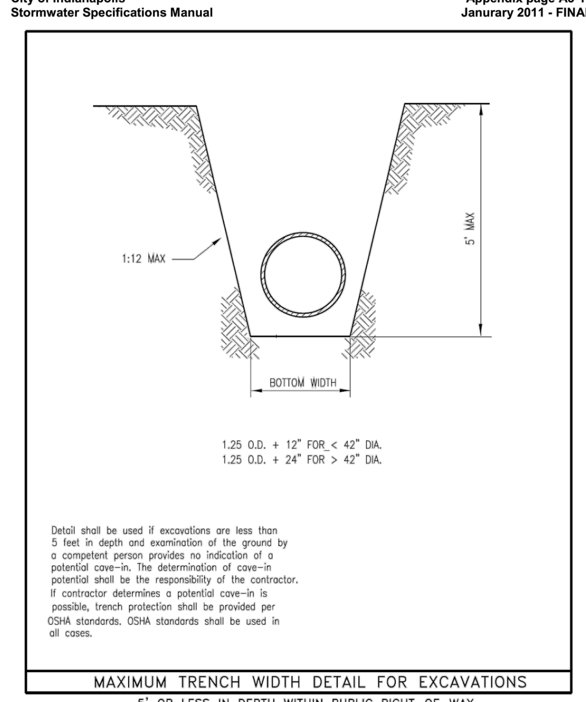

FIGURE 501-02: Maximum Trench Width Detail for Excavations

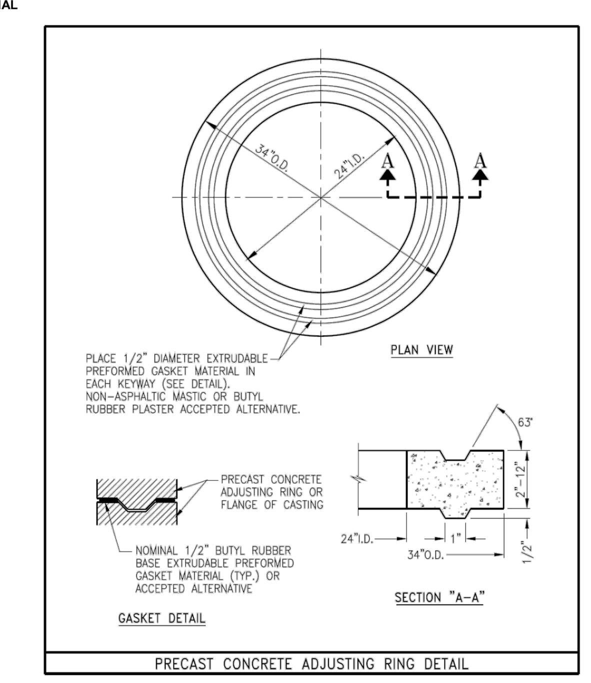

City of Indianapolis Storm Water Specifications Manual — Appendix page A4-10, January 2011 - FINAL

FIGURE 400-10: Precast Concrete Adjusting Ring Detail

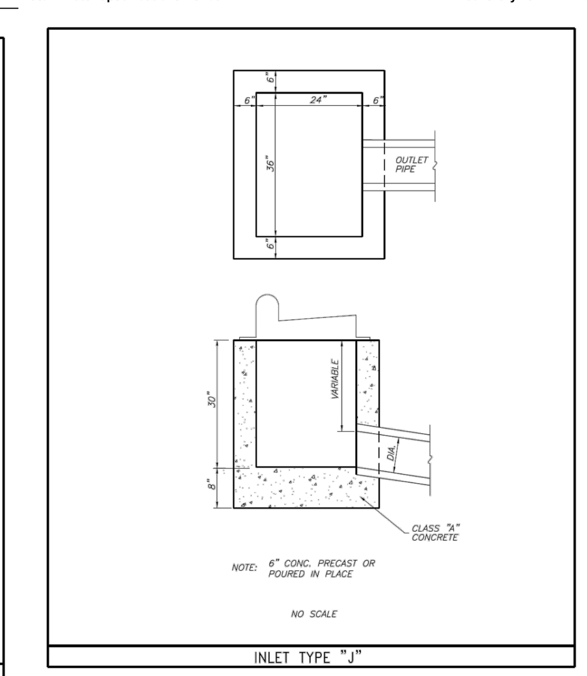

City of Indianapolis Storm Water Specifications Manual — Appendix page A4-9, January 2011 - FINAL

FIGURE 400-09: Inlet Type "J"

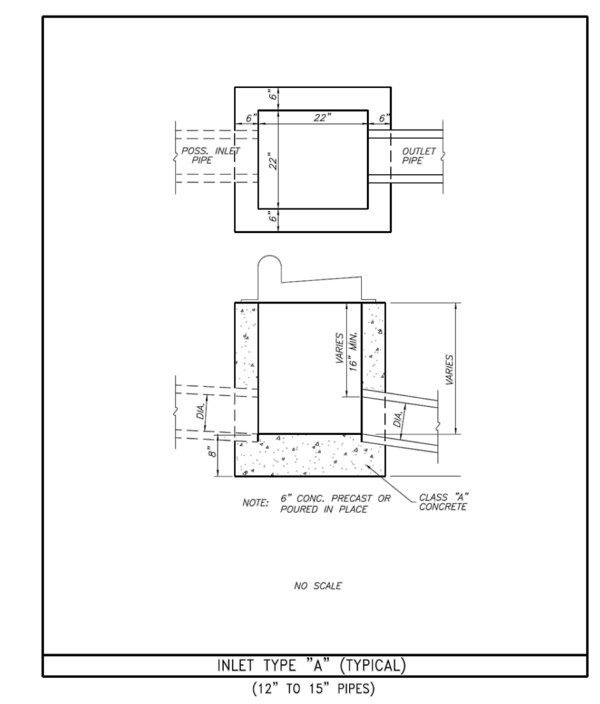

City of Indianapolis Storm Water Specifications Manual — Appendix page A4-4, January 2011 - FINAL

FIGURE 400-04: Inlet Type "A" (Typical)

City of Indianapolis Stormwater Specifications Manual — Appendix page A5-9, January 2011 - FINAL

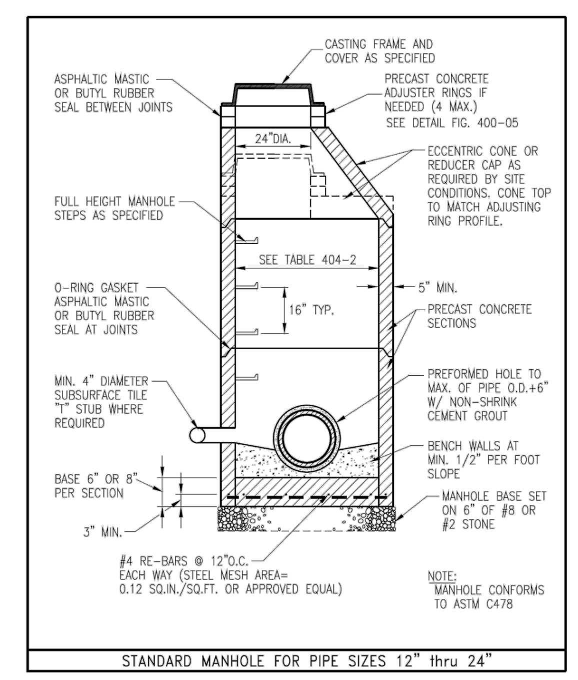

FIGURE 400-01: Standard Manhole for Pipe Sized 12" thru 24"

City of Indianapolis Storm Water Specifications Manual — Appendix page A4-10, January 2011 - FINAL

R-4215-C
Convex Grate

Heavy Duty

CATALOG NUMBER	GRATE TYPE	SQ. FT. OPEN	WEIR PERIMETER LINEAL FEET
R-4215-C	Beehive	3.3	11.3

For side ditch drainage.

R-3246
Combination Inlet Frame, Grate, Curb Box

Heavy Duty

CATALOG NUMBER	GRATE TYPE	SQ. FT. OPEN	WEIR PERIMETER LINEAL FEET
R-3246	C	1.6	5.8
R-3246	L	2.1	5.8
R-3246	V	2.4	5.8

Standard Grate (shown): Type C
Alternate Grate(s): Type L, Type V, Type R

Available with Type R Grate.
Also available with square, 1" radius or 2" radius.
Order **R-3246-1** for curb plate.
Available option: 6" radius box.

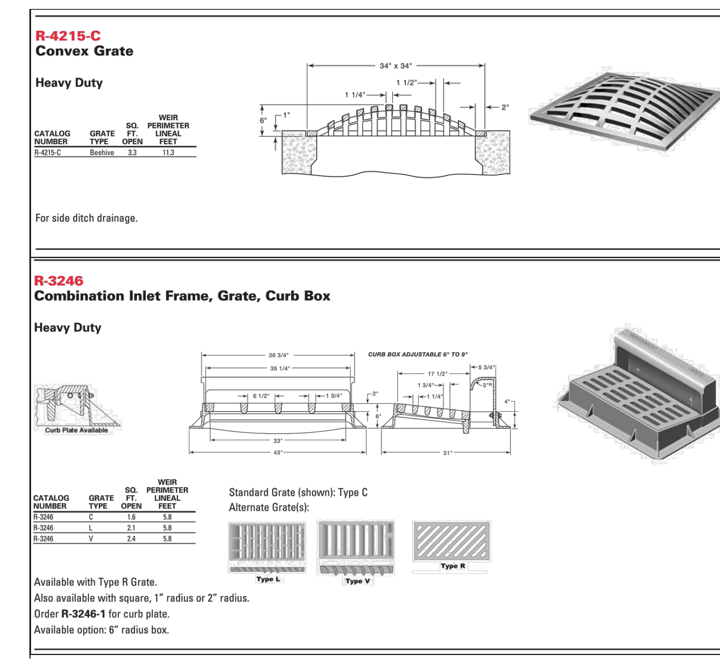

City of Indianapolis Storm Water Specifications Manual — Appendix page A4-9, January 2011 - FINAL

R-4030 to R-4040 Series
Sewer Pipe Grate

Heavy Duty

Fits in bell end of standard sewer pipe.
Bell and spigot vitrified clay and concrete pipe are made under many specifications and dimensions vary. Check the grate sizes in the table to be sure they will fit the pipe you are using.

If specified, special setback lug arrangement is available on R-4040 series, which modifies grate to fit corrugated metal pipe in sizes indicated. Not available on R-4030 series.

Dimensions in inches

Catalog No. Heavy Duty	Catalog No. Light Duty	Pipe Size	Grate Dia.	Grate * Thickness
R-4030-4 £	n/a	4	5 3/4	1 1/2
R-4030-6 £	R-4040-6	6	8	2
R-4030-8 £	R-4040-8	8	10 3/8	2 1/4
R-4030-10 £	R-4040-10	10	12 5/8	2 1/2
R-4030-12 £	R-4040-12	12	14 3/4	2 1/2
R-4030-15 £	R-4040-15	15	18 1/4	2 3/4
R-4030-18 + **	R-4040-18	18	22	2 3/4
R-4030-21 + **	R-4040-21	21	25 1/2	3
R-4030-24 + **	R-4040-24	24	29	3 1/4
R-4030-27 **	R-4040-27	27	32 3/4	3 1/2
R-4030-30 **	R-4040-30	30	36	3 3/4

* For Light Duty series, this figure includes legs.
** Slotted openings
£ Square openings
\+ Slight crown.

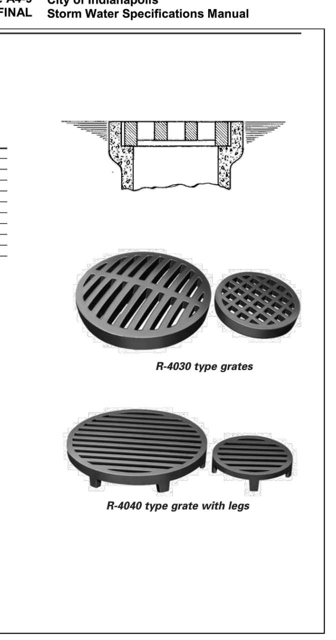

City of Indianapolis Storm Water Specifications Manual — Appendix page A4-1, January 2011 - FINAL

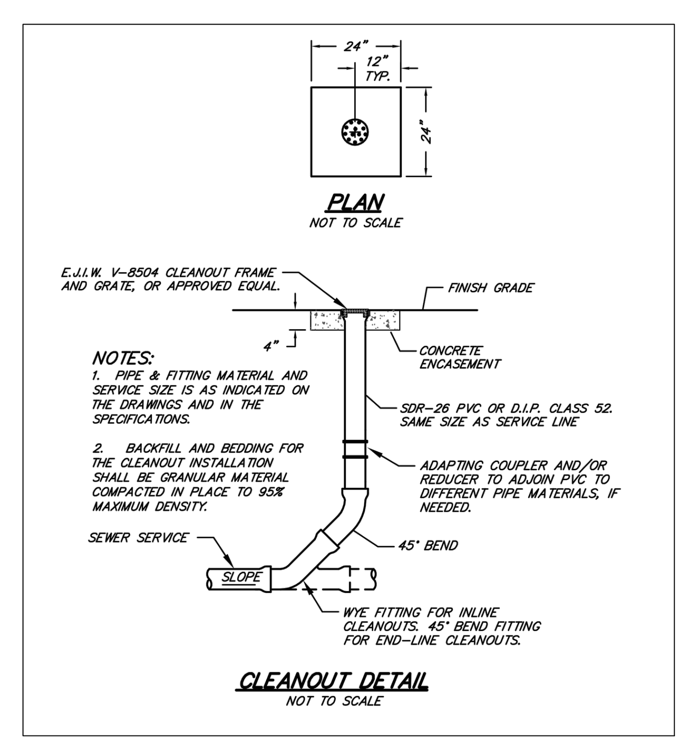

NOTES:
1. PIPE & FITTING MATERIAL AND SERVICE SIZE IS AS INDICATED ON THE DRAWINGS AND IN THE SPECIFICATIONS.
2. BACKFILL AND BEDDING FOR THE CLEANOUT INSTALLATION SHALL BE GRANULAR MATERIAL COMPACTED IN PLACE TO 95% MAXIMUM DENSITY.

CLEANOUT DETAIL
NOT TO SCALE

Indiana 811
Know what's below. Call before you dig.

G:\TLC\Franklin\Building Addition\Final\C601 C602 Detail Sheets.dwg, C602 Utility Details, 8/21/2016 10:45:01 AM