DEER MEADOWS SECTION ONE

CITY OF FRANKLIN, JOHNSON COUNTY, INDIANA

CONSTRUCTION PLANS

PREPARED FOR:
PYATT BUILDERS
168 W. CARMEL DRIVE
CARMEL, IN 46032
PHONE NO. (317) 379-0184
CONTACT: TODD PYATT

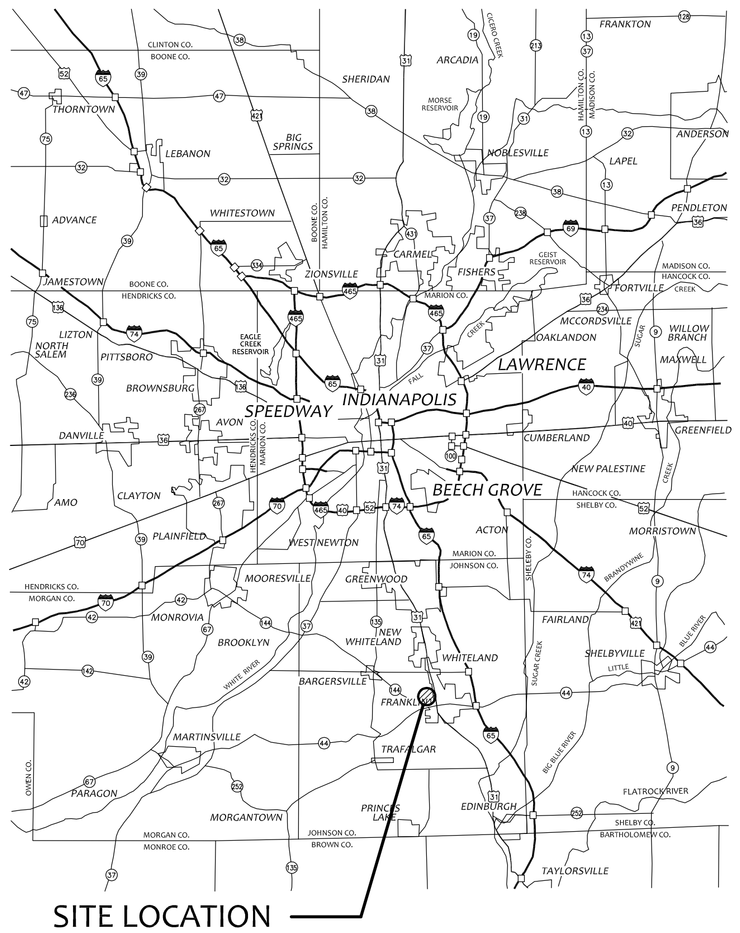

AREA MAP

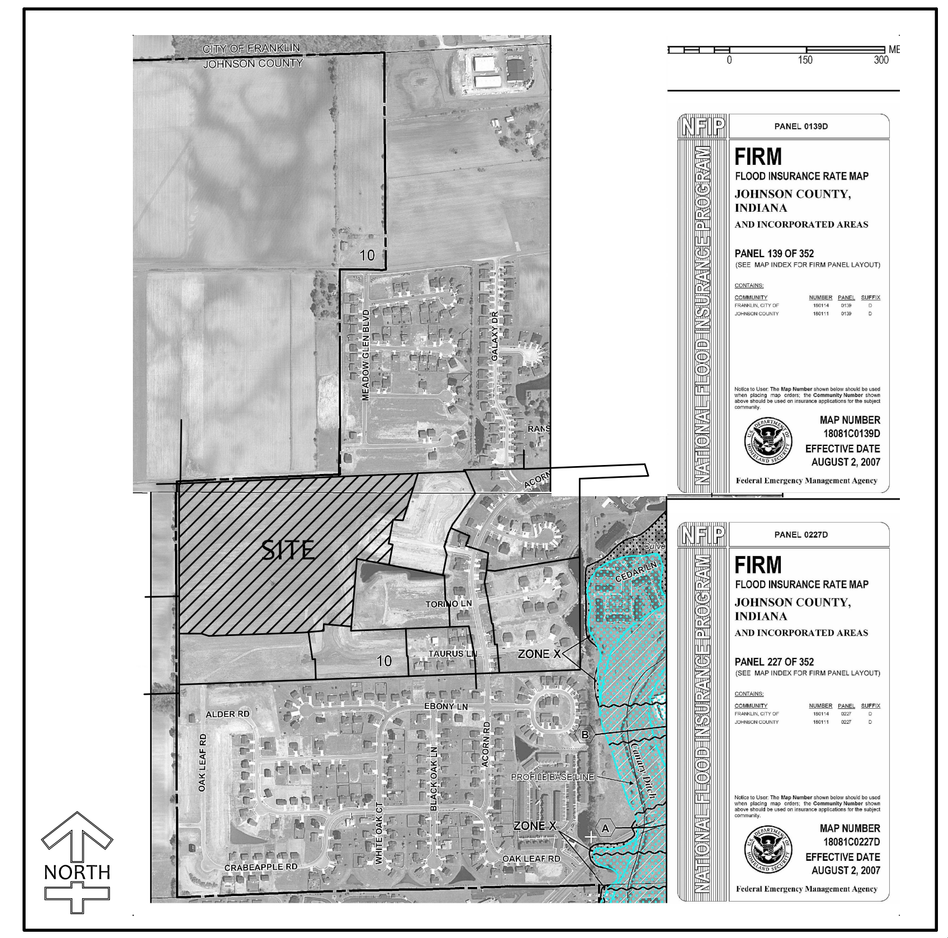

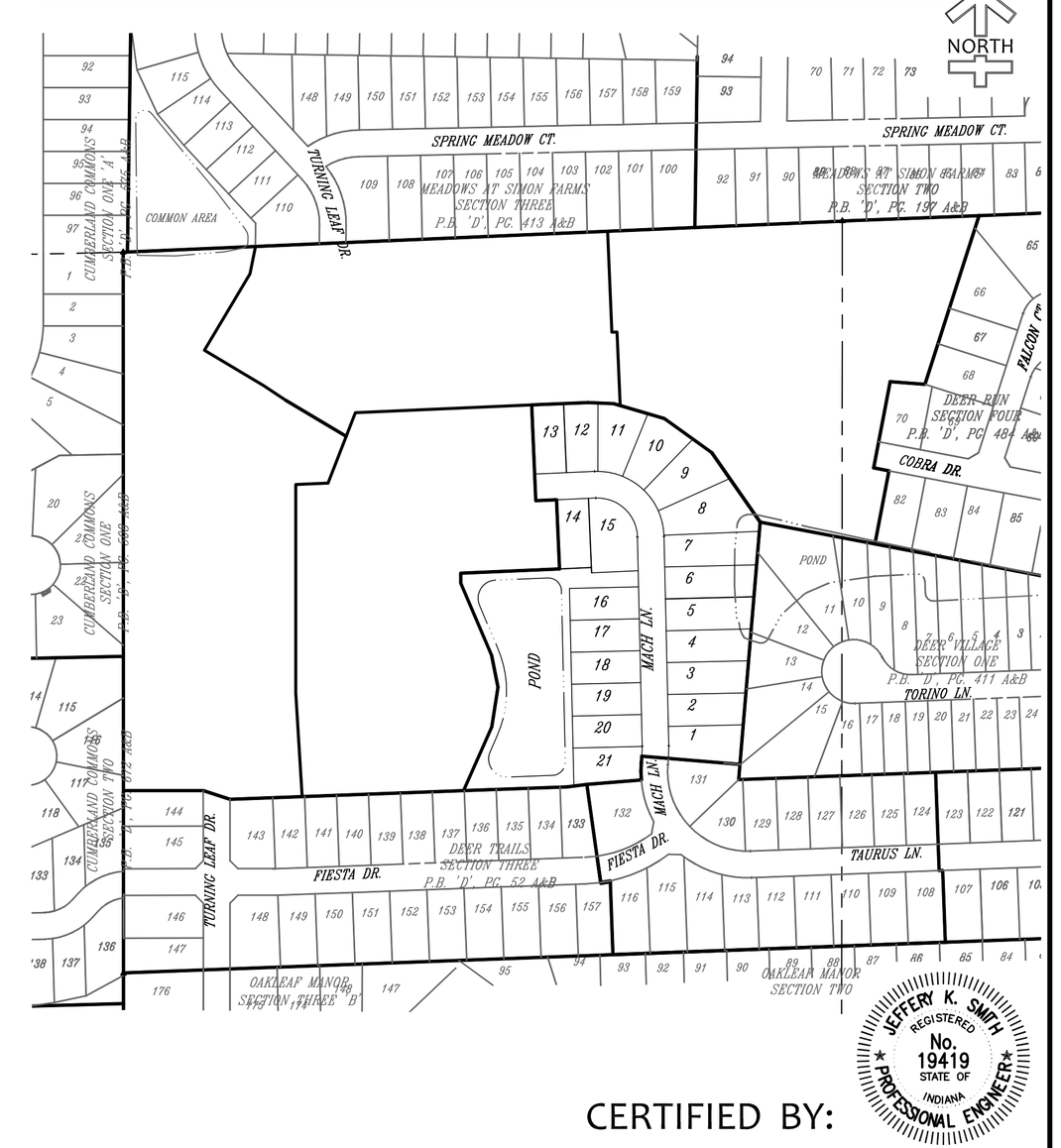

ISSUE NO.	DATE	DESCRIPTION
1	11/12/15	SUBMIT FOR GOVERNMENTAL AGENCY APPROVALS

INDEX OF DRAWINGS

SHEET NO.	DESCRIPTION
1	TITLE SHEET
2	EXISTING SITE CONDITIONS
3	PROPOSED SITE CONDITIONS
4	STORM WATER POLLUTION PREVENTION PLAN
5	STORM SEWER PLAN AND PROFILES
6	STREET PLAN AND PROFILES
7	POND DETAIL
8A–8B	SANITARY SEWER PLAN AND PROFILES
9	WATER DISTRIBUTION PLAN
10	STREET DETAILS
11	STORM SEWER DETAILS
12	SANITARY SEWER DETAILS
13	STORM WATER POLLUTION PREVENTION DETAILS
14	WATER DETAILS
15	SPECIFICATIONS

DESIGN DATA:

MACH LN.	0.13 MILES

PROJECT DATA:

ACRES:	6.861 Ac.
LOTS:	21
DENSITY:	3.061 LOTS/Ac.

DATES:

EST. PROPOSED START DATE:	WINTER 2015
EST. COMPLETION DATE:	SUMMER 2016

USES:

PROPOSED USE:	SINGLE FAMILY RESIDENTIAL
ZONING:	RSN

UTILITY CONTACT INFORMATION

GAS
VECTREN
600 INDUSTRIAL DRIVE
FRANKLIN, IN 46131
PHONE #: (317) 736–2989
CONTACT: DAVID SHERRY
DSHERRY@VECTREN.COM

ELECTRIC
DUKE ENERGY
2515 N. MORTON ST.
FRANKLIN, IN 46131
PHONE #: (317) 736–2014
CONTACT: JOE NUENSCHWANDER
JOSEPH.NEUENSCHWANDER@DUKE–ENERGY.COM

TELEPHONE
CENTURYLINK
1147 NORTH MORTON STREET
FRANKLIN, IN 46131
PHONE #: (317) 736–4863
CONTACT: LARRY TALBOT
LARRY.A.TALBOT@EMBARQ.COM

TELEPHONE
METRONET
111 COMMERCE DRIVE
FRANKLIN, IN 46131
PHONE #: (317) 739–0739
CONTACT: RICK HITE

WATER
INDIANA – AMERICAN WATER
555 E. COUNTY LINE ROAD, SUITE 201
GREENWOOD, IN 46143
PHONE #: (317) 885–2426
CONTACT: TRACY S. WHITE
TRACY.S.WHITE@AMWATER.COM

CABLE
COMCAST
1600 WEST VERNAL PIKE
BLOOMINGTON IN 47404
PHONE #: (812) 355–7822
CONTACT: SCOTT TEMPLETON
SCOTT_TEMPLETON@CABLE.COMCAST.COM

SANITARY SEWERS
DEPARTMENT OF PUBLIC WORKS
796 SOUTH STATE ST.
FRANKLIN, IN 46131
PHONE #: (317) 736–3640
CONTACT: RICK LITTLETON
DPWSUPERINTENDENT@FRANKLIN.IN.GOV

LEGAL DESCRIPTION

PART OF THE SOUTH HALF OF SECTION 10, TOWNSHIP 12 NORTH, RANGE 4 EAST OF THE SECOND PRINCIPAL MERIDIAN, JOHNSON COUNTY, INDIANA, DESCRIBED AS FOLLOWS:

COMMENCING AT THE NORTHWEST CORNER OF THE SOUTHEAST QUARTER OF SAID SECTION; THENCE ALONG THE NORTH LINE OF SAID HALF QUARTER SECTION NORTH 87 DEGREES 42 MINUTES 18 SECONDS EAST 257.10 FEET TO THE NORTHEAST CORNER OF DEER RUN SECTION FOUR THE PLAT OF WHICH IS RECORDED IN PLAT BOOK 'D', PAGES 484 A AND B IN THE OFFICE OF THE RECORDER OF JOHNSON COUNTY, INDIANA, THE NEXT FIVE (5) COURSES FOLLOW THE WESTERLY LINE THEREOF; 1) THENCE SOUTH 17 DEGREES 45 MINUTES 47 SECONDS WEST 332.92 FEET; 2) THENCE NORTH 85 DEGREES 43 MINUTES 02 SECONDS WEST 65.70 FEET; 3) THENCE SOUTH 10 DEGREES 49 MINUTES 25 SECONDS WEST 165.00 FEET; 4) THENCE SOUTH 79 DEGREES 10 MINUTES 35 SECONDS EAST 29.23 FEET; 5) THENCE SOUTH 10 DEGREES 49 MINUTES 25 SECONDS WEST 140.00 FEET TO A NORTHERLY LINE OF DEER VILLAGE SECTION ONE THE PLAT OF WHICH IS RECORDED IN PLAT BOOK 'D', PAGES 411 A AND B IN SAID RECORDERS OFFICE; THE NEXT TWO (2) COURSES FOLLOW THE NORTHERLY AND WESTERLY LINES THEREOF; 1) THENCE NORTH 79 DEGREES 10 MINUTES 35 SECONDS WEST 219.43 FEET TO THE POINT OF BEGINNING OF THIS DESCRIBED TRACT; 2) THENCE SOUTH 04 DEGREES 45 MINUTES 16 SECONDS WEST 456.88 FEET TO A NORTHERLY LINE OF DEER TRAILS SECTION TWO THE PLAT OF WHICH IS RECORDED IN PLAT BOOK 'D', PAGES 385 A AND B IN SAID RECORDERS OFFICE; THE NEXT FOUR (4) COURSES FOLLOW THE NORTHERLY LINE THEREOF; 1) THENCE NORTH 85 DEGREES 14 MINUTES 44 SECONDS WEST 185.00 FEET; 2) THENCE SOUTH 04 DEGREES 45 MINUTES 16 SECONDS WEST 12.00 FEET TO A CURVE CONCAVE SOUTHEASTERLY THE RADIUS OF SAID CURVE BEARS SOUTH 85 DEGREES 14 MINUTES 44 SECONDS EAST 200.00 FEET; 3) THENCE SOUTHEASTERLY ALONG SAID CURVE THROUGH A CENTRAL ANGLE OF 09 DEGREES 25 MINUTES 13 SECONDS 32.88 FEET; 4) THENCE SOUTH 85 DEGREES 20 MINUTES 03 SECONDS WEST 102.36 FEET TO THE NORTHWEST CORNER OF SAID DEER TRAILS SUBDIVISION SECTION TWO. SAID POINT ALSO BEING THE NORTHEAST CORNER OF DEER TRAILS SECTION THREE THE PLAT OF WHICH IS RECORDED IN PLAT BOOK 'D', PAGES 52 A AND B IN SAID RECORDERS OFFICE. THE NEXT TWO (2) COURSES FOLLOW THE NORTHERLY LINE THEREOF; 1) THENCE SOUTH 82 DEGREES 55 MINUTES 54 SECONDS WEST 36.94 FEET (South 85 DEGREES 06 MINUTES 04 SECONDS WEST 37.02 FEET PER PLAT); 2) THENCE SOUTH 87 DEGREES 53 MINUTES 51 SECONDS WEST 195.11 FEET (SOUTH 87 DEGREES 38 MINUTES 11 SECONDS WEST PER PLAT); THENCE NORTH 23 DEGREES 48 MINUTES 28 SECONDS EAST 130.73 FEET; THENCE NORTH 09 DEGREES 02 MINUTES 33 SECONDS EAST 75.58 FEET; THENCE NORTH 11 DEGREES 29 MINUTES 07 SECONDS WEST 61.22 FEET; THENCE NORTH 23 DEGREES 01 MINUTES 30 SECONDS WEST 147.74 FEET; THENCE NORTH 00 DEGREES 01 MINUTES 58 SECONDS WEST 18.61 FEET; THENCE NORTH 87 DEGREES 30 MINUTES 57 SECONDS EAST 185.57 FEET; THENCE NORTH 02 DEGREES 29 MINUTES 03 SECONDS WEST 130.00 FEET; THENCE SOUTH 87 DEGREES 30 MINUTES 57 SECONDS WEST 38.90 FEET; THENCE NORTH 02 DEGREES 29 MINUTES 03 SECONDS WEST 180.00 FEET; THENCE NORTH 87 DEGREES 30 MINUTES 57 SECONDS EAST 106.34 FEET; THENCE SOUTH 87 DEGREES 25 MINUTES 34 SECONDS EAST 47.99 FEET; THENCE SOUTH 73 DEGREES 34 MINUTES 21 SECONDS EAST 99.18 FEET; THENCE SOUTH 54 DEGREES 20 MINUTES 08 SECONDS EAST 109.74 FEET; THENCE SOUTH 34 DEGREES 51 MINUTES 40 SECONDS EAST 159.01 FEET TO POINT OF BEGINNING CONTAINING 6.861 ACRES, MORE OR LESS, SUBJECT TO ALL RIGHTS–OF–WAY, EASEMENTS AND RESTRICTIONS

FLOOD INFORMATION

THE ACCURACY OF THE FLOOD HAZARD DATA SHOWN ON THIS REPORT IS SUBJECT TO MAP SCALE UNCERTAINTY AND TO ANY OTHER UNCERTAINTY IN LOCATION OR ELEVATION ON THE REFERENCED FLOOD INSURANCE RATE MAP. ACCORDING TO THE FEDERAL EMERGENCY MANAGEMENT AGENCY FLOOD INSURANCE RATE MAP OF JOHNSON COUNTY, INDIANA, COMMUNITY PANEL #18081C0227D DATED AUGUST 2, 2007, THE DESCRIBED REAL ESTATE LIES WITHIN ZONE "X", WHICH IS DEFINED AS "AREAS DETERMINED TO BE OUTSIDE OF THE 0.2% ANNUAL CHANCE FLOODPLAIN".

RESPONSIBILITY NOTE

THE DEVELOPER/OWNER IS ULTIMATELY RESPONSIBLE TO ENSURE THAT THE PROPOSED PROJECT IS BUILT TO ALL CITY OF FRANKLIN STANDARDS AND SPECIFICATIONS.

THE PROJECT ENGINEER/SURVEYOR IS RESPONSIBLE IN ENSURING THAT THE SITE DEVELOPMENT PLANS ARE DESIGNED TO ALL CITY OF FRANKLIN STANDARDS AND SPECIFICATIONS.

PREPARED BY:
PROJECTS plus
GREENWOOD SURVEYING COMPANY
CIVIL ENGINEERING – LAND SURVEYING
LAND PLANNING – CONSTRUCTION MANAGEMENT
2555 Fairview Place Suite A – Greenwood, Indiana 46142
(317)–882–5003

CERTIFIED BY:

JEFFERY K. SMITH 10/15/15
JEFFERY K. SMITH
REGISTERED ENGINEER NO. 19419
STATE OF INDIANA

LEGEND :

27	LOT NUMBER
EX.SAN.	EXISTING SANITARY SEWER W/ MANHOLE
EX.LAT.	EXISTING SANITARY SEWER LATERAL
	EXISTING STORM SEWER W/ END SECTION, DITCH INLET AND CURB INLET
EX.8"W	EXISTING WATER LINE W/ FIRE HYDRANT
EXG	EXISTING GAS LINE
	EXISTING TREELINE
X	EXISTING FENCE
×753.68	EXISTING SPOT ELEVATION
752	EXISTING CONTOUR LINE
S.S.,D.&U.E.	SANITARY SEWER, DRAINAGE AND UTILITY EASEMENT
D.&U.E.	DRAINAGE AND UTILITY EASEMENT
B.S.L.	BUILDING SETBACK LINE

NOTICES AND PERMITS

1. THE CONTRACTOR SHALL BE RESPONSIBLE FOR OBTAINING OR VERIFYING THAT ALL PERMITS AND APPROVALS ARE OBTAINED FROM THE RESPECTIVE CITY, COUNTY OR STATE AGENCIES PRIOR TO STARTING ANY CONSTRUCTION.
2. IT SHALL BE THE CONTRACTOR'S RESPONSIBILITY TO DETERMINE THE EXACT LOCATION OF ALL UTILITIES IN THE VICINITY OF THE CONSTRUCTION AREA PRIOR TO STARTING ANY CONSTRUCTION.
3. IT SHALL BE THE CONTRACTOR'S RESPONSIBILITY FOR NOTIFICATION AND COORDINATION OF ALL CONSTRUCTION WITH THE RESPECTIVE UTILITY COMPANIES PRIOR TO STARTING ANY CONSTRUCTION.

FOR EASEMENT LOCATIONS AND DESIGNATIONS SEE FINAL RECORD PLAT AND RESTRICTIONS

BENCHMARK: ELEV.=755.95

1. NORTH RIM ON MANHOLE NO. 8 IN DEER TRACE SUBDIVISION.

T.B.M. ELEV.=753.39

1. TOP OF EXISTING SANITARY MANHOLE AT CORNER OF LOT #29 IN DEER RUN SEC. 2.

FLOOD INFORMATION

THE ACCURACY OF THE FLOOD HAZARD DATA SHOWN ON THIS REPORT IS SUBJECT TO MAP SCALE UNCERTAINTY AND TO ANY OTHER UNCERTAINTY IN LOCATION OR ELEVATION ON THE REFERENCED FLOOD INSURANCE RATE MAP. ACCORDING TO THE FEDERAL EMERGENCY MANAGEMENT AGENCY FLOOD INSURANCE RATE MAP OF JOHNSON COUNTY, INDIANA, COMMUNITY PANEL #18081C0227D DATED AUGUST 2, 2007, THE DESCRIBED REAL ESTATE LIES WITHIN ZONE "X", WHICH IS DEFINED AS "AREAS DETERMINED TO BE OUTSIDE OF THE 0.2% ANNUAL CHANCE FLOODPLAIN".

811
Know what's below.
Call before you dig.
"IT'S THE LAW"
CALL 2 WORKING DAYS BEFORE YOU DIG

THIS DRAWING/COMPUTER FILE IS THE PROPERTY OF PROJECTS PLUS ANY REPRODUCTION OR REUSE OF THIS DOCUMENT WITHOUT WRITTEN PERMISSION FROM PROJECTS PLUS IS PROHIBITED. ANY PERSON OR ENTITY USING THIS DOCUMENT FOR ANY PURPOSE OTHER THAN THE PROJECT FOR WHICH IT WAS ORIGINALLY INTENDED, WITH OR WITHOUT PERMISSION FROM PROJECTS PLUS, BY ITS USE AGREES TO INDEMNIFY AND HOLD HARMLESS PROJECTS PLUS FROM ANY LOSS, INCLUDING BUT NOT LIMITED TO ATTORNEY'S FEES, OCCURRING FROM THEIR USE.

SYMBOL	REVISION	DATE

SCALE 1"=50'
DRAWN JPH
CHECKED JKS
CERTIFIED JKS

PROJECT
DEER MEADOWS – SECTION ONE
CITY OF FRANKLIN, JOHNSON COUNTY, INDIANA

TITLE
EXISTING SITE CONDITIONS

PROJECTS plus
GREENWOOD SURVEYING COMPANY
CIVIL ENGINEERING – LAND SURVEYING
LAND PLANNING – CONSTRUCTION MANAGEMENT 46142
2355 Fairview Place, Suite A – Greenwood, Indiana (317)-882-5003

SEAL
JEFFERY K. SMITH
REGISTERED No. 19419 STATE OF INDIANA
PROFESSIONAL ENGINEER
11/12/15

JOB NUMBER 15015.01

SHEET 2 OF 15 SHEETS

DATE NOVEMBER 12, 2015

TYPICAL LOT GRADING PLAN

NORTH

0 30' 60' 90' 120'

NOTES

1. ALL UTILITY CROSSINGS OR TRENCHES WITHIN (5) FEET OF THE EDGE OF PAVEMENT SHALL BE BACKFILLED TO THE SUBGRADE WITH GRANULAR MATERIAL (THE UPPERMOST 48" OF GRANULAR MATERIAL SHALL BE #53 STONE) AND COMPACTED IN SIX INCH LIFTS.
2. TRAFFIC CONTROL DEVICES SHALL MEET I.M.U.T.C.D. STANDARDS
3. THE PAVING/SUBGRADE CONTRACTOR SHALL NOTIFY THE CITY OF GREENWOOD ENGINEERING DEPARTMENT, (317) 887-5230 AT LEAST 24 HOURS PRIOR TO PROOF ROLL ON THE PROPOSED STREETS.
4. FOR UNDERDRAIN LOCATIONS SEE STREET PLAN AND PROFILES.
5. FOR SERVICE LATERAL LOCATIONS SEE LATERAL PLAN
6. FOR HANDICAP ACCESS RAMP DETAILS SEE STREET DETAILS.
7. THE FINISH GRADE AROUND THE DWELLING SHALL BE 0.33' FEET ABOVE THE PAD GRADE SHOWN ON THIS PLAN.
8. ALL EXISTING FIELD TILES DISTURBED DURING CONSTRUCTION SHALL BE RE-DIRECTED TO THE NEAREST STORM STRUCTURE AND SHOWN ON AS-BUILT DRAWINGS.
9. PRIOR TO ISSUANCE OF ANY BUILDING PERMITS THE BITUMINOUS BASE AND BINDER LAYERS FOR ALL STREETS, DRIVES AND PARKING LOTS TO BE INSTALLED AND ALL WATER MAINS AND HYDRANTS FOR THE SITE DEVELOPMENT MUST BE INSTALLED PER APPROVED SPECIFICATIONS AND MADE SERVICEABLE.
10. STREET TREES ARE REQUIRED FOR EVERY LOT AT A RATIO OF 1 PER EVERY 35 FT. OR PORTION THEREOF OF STREET FRONTAGE AND MEET THE REQUIREMENTS OUTLINED IN ARTICLE 6.15.

FOR EASEMENT LOCATIONS AND DESIGNATIONS SEE FINAL RECORD PLAT AND RESTRICTIONS

NOTICES AND PERMITS

1. THE CONTRACTOR SHALL BE RESPONSIBLE FOR OBTAINING OR VERIFYING THAT ALL PERMITS AND APPROVALS ARE OBTAINED FROM THE RESPECTIVE CITY, COUNTY OR STATE AGENCIES PRIOR TO STARTING ANY CONSTRUCTION.
2. IT SHALL BE THE CONTRACTOR'S RESPONSIBILITY TO DETERMINE THE EXACT LOCATION OF ALL UTILITIES IN THE VICINITY OF THE CONSTRUCTION AREA PRIOR TO STARTING ANY CONSTRUCTION.
3. IT SHALL BE THE CONTRACTOR'S RESPONSIBILITY FOR NOTIFICATION AND COORDINATION OF ALL CONSTRUCTION WITH THE RESPECTIVE UTILITY COMPANIES PRIOR TO STARTING ANY CONSTRUCTION.

BENCHMARK: ELEV.=755.95

1. NORTH RIM ON MANHOLE NO. 8 IN DEER TRACE SUBDIVISION.

T.B.M. ELEV.=753.39

1. TOP OF EXISTING SANITARY MANHOLE AT CORNER OF LOT #29 IN DEER RUN SEC. 2.

FLOOD INFORMATION

THE ACCURACY OF THE FLOOD HAZARD DATA SHOWN ON THIS REPORT IS SUBJECT TO MAP SCALE UNCERTAINTY AND TO ANY OTHER UNCERTAINTY IN LOCATION OR ELEVATION ON THE REFERENCED FLOOD INSURANCE RATE MAP. ACCORDING TO THE FEDERAL EMERGENCY MANAGEMENT AGENCY FLOOD INSURANCE RATE MAP OF JOHNSON COUNTY, INDIANA, COMMUNITY PANEL #18081C0227D DATED AUGUST 2, 2007, THE DESCRIBED REAL ESTATE LIES WITHIN ZONE "X", WHICH IS DEFINED AS "AREAS DETERMINED TO BE OUTSIDE OF THE 0.2% ANNUAL CHANCE FLOODPLAIN".

LEGEND :

27	LOT NUMBER
754.50	PROPOSED EARTHEN PAD ELEVATION
	PROPOSED SANITARY SEWER W/ MANHOLE
	PROPOSED STORM SEWER W/ END SECTION, DITCH INLET AND CURB INLET
EX.SAN.	EXISTING SANITARY SEWER W/ MANHOLE
	EXISTING STORM SEWER W/ END SECTION, DITCH INLET AND CURB INLET
406	STRUCTURE NUMBER
P-4.85 / M-4 / F-2.84	PROPOSED SPOT ELEVATION
	MATCH EXISTING GRADE
752	EXISTING CONTOUR LINE
S.S.,D.&U.E.	SANITARY SEWER, DRAINAGE AND UTILITY EASEMENT
D.&U.E.	DRAINAGE AND UTILITY EASEMENT
B.S.L.	BUILDING SETBACK LINE
	PROPOSED HANDICAP ACCESS RAMP
LIGHT	PROPOSED AREA LIGHT
N	PROPOSED STREET NAME SIGN
S	PROPOSED STOP SIGN
SL	PROPOSED SPEED LIMIT SIGN (25 M.P.H.)
•	CENTERLINE MONUMENT (5/8" REBAR 24" LONG, 1.04 lb/ft.)

MINIMUM SETBACKS

1. SIDE YARDS – THE SIDE YARD SETBACK LINES SHALL BE A MINIMUM OF FIVE (5) FEET FORM THE SIDE LINES OF THE LOT.
2. REAR YARD– THE REAR YARD SETBACK SHALL BE A MINIMUM OF FIFTEEN (15) FEET FROM THE REAR LINE OF THE LOT.

811

Know what's below. Call before you dig.

"IT'S THE LAW"

CALL 2 WORKING DAYS BEFORE YOU DIG

THIS DRAWING/COMPUTER FILE IS THE PROPERTY OF PROJECTS PLUS ANY REPRODUCTION OR REUSE OF THIS DOCUMENT WITHOUT WRITTEN PERMISSION FROM PROJECTS PLUS IS PROHIBITED. ANY PERSON OR ENTITY USING THIS DOCUMENT FOR ANY PURPOSE OTHER THAN THE PROJECT FOR WHICH IT WAS ORIGINALLY INTENDED, WITH OR WITHOUT PERMISSION FROM PROJECTS PLUS, BY ITS USE AGREES TO INDEMNIFY AND HOLD HARMLESS PROJECTS PLUS FROM ANY LOSS, INCLUDING BUT NOT LIMITED TO ATTORNEY'S FEES, OCCURRING FROM THEIR USE.

SYMBOL	REVISION	DATE

SCALE 1"=60'
DRAWN JPH
CHECKED JKS
CERTIFIED JKS

PROJECT
DEER MEADOWS – SECTION ONE
CITY OF FRANKLIN, JOHNSON COUNTY, INDIANA

TITLE
PROPOSED SITE CONDITIONS

PROJECTS plus
GREENWOOD SURVEYING COMPANY
CIVIL ENGINEERING – LAND SURVEYING
LAND PLANNING – CONSTRUCTION MANAGEMENT
2555 Fairview Place, Suite A – Greenwood, Indiana 46142
(317)-882-5003

SEAL
JEFFERY K. SMITH
REGISTERED
No. 19419
STATE OF INDIANA
PROFESSIONAL ENGINEER
11/12/15

JOB NUMBER
15015.01

SHEET
3
OF 15 SHEETS

DATE
NOVEMBER 12, 2015

INDEX OF REQUIRED INFORMATION FOR CONSTRUCTION STORM WATER POLLUTION PREVENTION FOR DEER MEADOWS – SECTION ONE

EROSION CONTROL PLAN INDEX

ELEMENT	SHEET.	ELEMENT	SHEET.	ELEMENT	SHEET.	ELEMENT	SHEET.
A1	4	A12	N/A	A23	3	B10	4,13
A2	ATTACHED	A13	N/A			B11	4,13
A3	4	A14	4	B1	4	B12	4,13
A4	4	A15	4	B2	4,13	B13	4,13
A5	1	A16	4	B3	4,13	B14	4,13
A6	3	A17	2	B4	4,13	B15	4
A7	4	A18	13	B5	4,13	C1	4
A8	N/A	A19	5	B6	4,13	C2	13
A9	4	A20	N/A	B7	4,13	C3	5, 13
A10	N/A	A21	4	B8	4,13	C4	13
A11	4	A22	2	B9	N/A	C5	4

A2. INCLUDED IN SUBMITTAL PACKET.
A3. DEER MEADOWS – SECTION ONE IS A PROPOSED RESIDENTIAL SUBDIVISION IN THE CITY OF FRANKLIN, INDIANA. THE CONSTRUCTION IMPROVEMENTS SHALL CONSIST OF ASPHALT PAVEMENT AND CONCRETE CURBS, CONCRETE WALKS, STORM SEWERS, SANITARY SEWERS, WATER MAIN EXTENSION AND EARTHWORK.
A4. VICINITY MAP ON TITLE SHEET – SEE SHEET 1
A5. LEGAL DESCRIPTION – SE/SW 1/4, SEC. 10–T12N–R4E
LATITUDE: N39°29'56" LONGITUDE: W86°04'38"
A6. LOTS AND IMPROVEMENTS SHOWN ON PROPOSED SITE CONDITIONS – SEE SHEET(S) 3
A7. HYDROLOGIC UNIT CODE: 05120204090030
A8. NO STATE OR FEDERAL WATER QUALITY PERMITS ARE REQUIRED FOR THIS PROJECT.
A9. STORM WATER WILL DISCHARGE FROM THE SITE INTO DETENTION FACILITY, ULTIMATELY CANARY DITCH– SEE SHEET(S) 4
A10. NO WETLANDS EXIST ONSITE
A11. RECEIVING WATERS: CANARY DITCH
A12. WE ANTICIPATE NO POTENTIAL AREAS WERE DISCHARGE WILL ENTER GROUNDWATER.
A13. NO 100 YEAR FLOODPLAINS, FLOODWAYS OF FLOODWAY FRINGES EXIST ON THIS SITE
A14. PRE–CONSTRUCTION 10 YEAR OUTFLOW = 19.08 C.F.S.
POST–CONSTRUCTION 10 YEAR OUTFLOW = 7.45 C.F.S.
A15. LAND USE OF ADJACENT PROPERTIES:
NORTH: RESIDENTIAL – WEST: RESIDENTIAL
SOUTH: RESIDENTIAL – EAST: RESIDENTIAL
A16. BOUNDARY OF DISTURBED AREA SHOWN ON PLANS – SEE SHEET(S) 4
A17. EXISTING SITE IS AN AGRICULTURAL FIELD – SEE SHEET(S) 2
A18. SOIL MAP LOCATED ON STORM SEWER POLLUTION PREVENTION PLAN– SEE SHEET 13
A19. LOCATION, SIZE AND DIMENSIONS OF STORM WATER SYSTEMS SHOWN ON STORM PLAN AND PROFILE SHEETS – SEE SHEET(S) 5
A20. NO OFFSITE CONSTRUCTION ACTIVITIES WILL BE NECESSARY
A21. ALL NECESSARY SOIL STOCKPILE, BORROW AND DISPOSAL AREAS ARE SHOWN ON STORM SEWER POLLUTION PREVENTION PLAN – SEE SHEET(S) 4
A22. EXISTING SITE TOPOGRAPHY SHOWN ON EXISTING SITE CONDITION PLANS – SEE SHEET(S) 2
A23. PROPOSED FINAL SITE TOPOGRAPHY SHOWN ON PROPOSED SITE CONDITION PLAN – SEE SHEET(S) 3

B1. POTENTIAL STORM WATER POLLUTANT SOURCES ASSOCIATED WITH CONSTRUCTION ACTIVITY INCLUDE GASOLINE, OIL AND OTHER FLUIDS FROM CONSTRUCTION EQUIPMENT, CONCRETE, ASPHALT AND SEDIMENT LADEN RUNOFF. CONTRACTOR SHALL ESTABLISH AN EMPLOYEE PARKING AREA AND VEHICLE MAINTENANCE AREA AS SHOWN ON THE PLAN(S). A PROPER CONCRETE WASHOUT AREA SHALL ALSO BE ESTABLISHED AS SHOWN ON THE PLAN(S), THIS WASHOUT PIT SHALL MEET REQUIREMENTS SET FORTH IN THE CURRENT I.S.W.Q.M. FOR DETAIL OF WASHOUT PIT SEE SHEET 13
B2. INDIVIDUAL STORM WATER QUALITY MEASURES ARE SHOWN ON THE ATTACHED PLAN, I.E. FILTER FENCING, CONSTRUCTION ENTRANCE, SEEDING AND BLANKETS. AN EROSION CONTROL CONSTRUCTION SEQUENCE SCHEDULING, SHOWING THE IMPLEMENTATION RELATIVE TO LAND DISTURBING ACTIVITIES IS SHOWN ON STORM WATER POLLUTION PREVENTION DETAIL SHEET – SEE SHEET 13
B3. A CONSTRUCTION ENTRANCE LOCATION IS SHOWN ON STORM SEWER POLLUTION PREVENTION PLAN(S) – SEE SHEET(S) 4, FOR SPECIFICATIONS AND DETAILS REGARDING THE ENTRANCE IS SHOWN STORM WATER POLLUTION PREVENTION DETAIL SHEET, SEE SHEET 13
B4. SEDIMENT CONTROL MEASURES FOR SHEET FLOW SHOWN ON STORM SEWER POLLUTION PREVENTION PLAN(S) – SEE SHEET(S) 4, DETAIL ON SHEET 13. CONTRACTOR TO INSURE ALL REQUIRED MEASURES OF FILTER FENCE ARE INSTALLED AND REQUIRED VEGETATIVE FILTER STRIPS ARE MAINTAINED.
B5. SEDIMENT CONTROL MEASURES FOR CONCENTRATED FLOW SHOWN ON STORM SEWER POLLUTION PREVENTION PLAN(S) – SEE SHEET(S) 4, FOR DETAILS, SEE SHEET 13. CONTRACTOR TO GRADE DIVERSIONARY DITCHES TO CHANNEL WATER AS CONSTRUCTION PROCEEDS SO THAT SEDIMENT IS NOT ALLOWED TO FLOW UNFILTER.
B6. STORM SEWER INLET PROTECTION MEASURES ARE SHOWN ON STORM SEWER POLLUTION PREVENTION PLAN(S), SEE SHEET(S) 4, FOR DETAILS, SEE SHEET 13. CONTRACTOR TO INSTALL TEMPORARY BASKET INSERTS, FILTER INSERTS, FILTER SLEEVES/TUBES, WIRE BASKETS OR OTHER REQUIRED INLET PROTECTION MEASURES SHOWN ON THE PLAN(S).
B7. RUNOFF CONTROL MEASURES ARE SHOWN ON STORM SEWER POLLUTION PREVENTION PLAN(S), SEE SHEET(S) 4, FOR DETAILS SHEET 13. CONTRACTOR SHALL INSTALL ALL DIVERSIONS, ROCK CHECK DAM, TEMPORARY SLOPE DRAIN OR OTHER REQUIRED RUNOFF CONTROL MEASURES SHOWN ON THE PLAN(S).
B8. STORM WATER OUTLET PROTECTION MEASURES ARE SHOWN ON STORM SEWER POLLUTION PREVENTION PLAN(S), SEE SHEET(S) 4, FOR DETAILS SHEET 13. CONTRACTOR SHALL INSTALL ALL RIPRAP SLOPE PROTECT OR OTHER REQUIRED RUNOFF CONTROL MEASURES SHOWN ON THE PLAN(S).
B9. NO GRADE STABILIZATION MEASURES ARE NECESSARY
B10. STORM WATER QUALITY LOCATIONS AND MEASURES ARE SHOWN ON THE STORM WATER POLLUTION PREVENTION SHEET(S)(S), SEE SHEET(S) 4, FOR SPECIFICATIONS, DIMENSIONS AND CONSTRUCTION DETAILS, SEE SHEET 13. CONTRACTOR SHALL INSTALL THE VARIOUS EROSION CONTROL MEASURES SHOWN STORM SEWER POLLUTION PREVENTION PLAN(S).
B11. SURFACE STABILIZATION METHODS SHOWN ON STORM WATER POLLUTION PREVENTION SHEET(S), SEE SHEET(S) 4, FOR DETAIL, SEE GENERAL NOTE ON THE STORM WATER POLLUTION PREVENTION SHEET(S). CONTRACTOR SHALL INSTALL THE REQUIRED SEEDING, MULCH BLANKETS OR OTHER SURFACE STABILIZATION MEASURES SHOWN ON THE PLAN(S).
B12. PERMANENT SURFACE STABILIZATION METHODS SHOWN ON STORM WATER POLLUTION PREVENTION SHEET(S), SEE SHEET(S) 4, FOR DETAIL, SEE GENERAL NOTE ON THE STORM WATER POLLUTION PREVENTION SHEET(S). CONTRACTOR SHALL INSTALL THE REQUIRED SEEDING, MULCH BLANKETS OR OTHER SURFACE STABILIZATION MEASURES SHOWN ON THE PLAN(S).
B13. MATERIAL HANDLING AND STORAGE ASSOCIATED WITH CONSTRUCTION ACTIVITY SHALL MEET THE SPILL PREVENTION AND SPILL RESPONSE REQUIREMENTS IN 327 IAC 2–6.1. FULL EMERGENCY PLAN IS SHOWN ON STORM WATER POLLUTION PREVENTION DETAIL SHEET, SEE SHEET 13. ALL MATERIALS SHALL BE HANDLED IN ACCORDANCE WITH GUIDELINES SET FORTH IN MATERIAL SAFETY DATA SHEET(S) PROVIDED BY MANUFACTURER.
B14. MONITORING AND MAINTENANCE GUIDELINES FOR EACH PROPOSED POLLUTION PREVENTION MEASURE ARE TO BE PROVIDE BY THE CONTRACTOR, A SELF–MONITORING PROGRAM THAT INCLUDE THE FOLLOWING MUST BE IMPLEMENTED:
A) A TRAINED INDIVIDUAL SHALL PERFORM A WRITTEN EVALUATION OF THE PROJECT SITE
1. BY THE END OF THE NEXT BUSINESS DAY FOLLOWING EACH MEASURABLE STORM EVENT AND
2. AT LEAST ONE (1) TIME PER WEEK
B) THE EVALUATION MUST ADDRESS:
1. THE MAINTENANCE OF EXISTING STORM WATER QUALITY MEASURES TO ENSURE THEY ARE FUNCTIONING PROPERLY AND
2. IDENTIFY ADDITIONAL MEASURES NECESSARY TO REMAIN IN COMPLIANCE WITH ALL APPLICABLE STATUTES AND RULES.
C) WRITTEN EVALUATION REPORTS MUST INCLUDE:
1. THE NAME OF THE INDIVIDUAL PERFORMING THE ACTION
2. THE DATE OF THE EVALUATION
3. PROBLEMS IDENTIFIED AT THE PROJECT SITE AND
4. DETAILS OF CORRECTIVE ACTIONS RECOMMENDED AND COMPLETED.
B15.
EROSION CONTROL FOR INDIVIDUAL BUILDING LOTS CONSTRUCTION SEQUENCE AS FOLLOWS:
1. CONSTRUCT STONE DRIVEWAY.
2. LIMIT ALL DELIVERIES TO THE STONE DRIVEWAY.
3. PRESERVE AS MUCH OF THE EXISTING VEGETATION AS POSSIBLE.
4. LARGE EXPOSED AREAS ON OR NEAR SLOPES WILL REQUIRE A SILT FENCE.
5. AFTER CONSTRUCTION OF FOUNDATION, ROUGH GRADE AND SEED LOT.
6. AFTER BUILDING GUTTERS ARE INSTALLED, USE TEMPORARY EXTENSIONS TO LET WATER PASS EXPOSED AREAS.
7. AFTER FINAL GRADING, SEED OR SOD THE YARD AS SOON AS POSSIBLE

C1. EXPECTED POLLUTANTS ASSOCIATED WITH THE PROPOSED LAND USE INCLUDE FLUIDS FROM VEHICULAR TRAFFIC (I.E. OIL, GREASE, ANTIFREEZE, GASOLINE, ETC.), SAND AND GRIT FROM ROADWAY SURFACES AND SUBSTANCES ASSOCIATED WITH THE MAINTENANCE OF LAWNS AND GARDENS. THE ONLY OTHER REASONABLY FORESEEN POLLUTION FROM THIS SITE WILL BE MINIMAL AMOUNT OF LITTER AND TRASH FROM IMPROPER DISPOSAL.
C2. POST CONSTRUCTION STORMWATER QUALITY SHOULD BE INSTALLED PRIOR TO MAJOR LAND DISTURBANCE OCCURRING.
1. EROSION CONTROL MEASURES SHOWN ON THIS PLAN TO BE INSTALLED FIRST.
2. DETENTION PONDS AND ANY WATER QUALITY BEST MANAGEMENT PRACTICE (BMP) STRUCTURES TO BE UTILIZED FOR SEDIMENT CONTROL
3. INSTALL RIP RAP PROTECTION AT ALL END SECTIONS ENTERING POND AS SOON AS PIPES ARE IN PLACE.
4. INSPECT AND RE–SEED SWALES AS NEEDED AFTER COMPLETION OF FINAL GRADING.
5. MONITOR AND MAINTAIN SWALE AREAS UNTIL A MATURE STAND OF GRASS EXISTS.
6. CLEAN ALL CATCH BASINS OF DEBRIS WHEN GRADING IS COMPLETE.
7. SWEEP STREETS REGULARLY AND KEEP FREE OF DEBRIS.
8. FINAL STABILIZATION OF THE SITE USING PERMANENT SEEDING OF ALL OPEN AREAS.
C3. POST–CONSTRUCTION STORM WATER QUALITY WILL BE ACCOMPLISHED BY ROUTING THE SITE RUNOFF THROUGH A DETENTION POND DESIGNED TO DETAIN, FOR AT LEAST 24 HOURS AFTER PEAK RUNOFF, 20% OF THE RUNOFF GENERATED FROM EITHER A 1–1/4" STORM EVENT OR 1/2" OF DIRECT RUNOFF, WHICHEVER IS GREATER. THE WET DETENTION PONDS ACTS AS A PERMANENT STORMWATER CONTROL STRUCTURE PROVIDING BOTH DETENTION AND TREATMENT OF CONTAMINATED STORMWATER RUNOFF. THE POND CONSISTS OF A PERMANENT POOL OF WATER INTO WHICH STORM WATER RUNOFF IS DIRECTED. RUNOFF FROM EACH RAIN EVENT IS DETAINED AND TREATED IN THE POND UNTIL IT IS DISPLACED BY RUNOFF FROM THE NEXT STORM. THE POND'S NATURAL PHYSICAL, BIOLOGICAL, AND CHEMICAL PROCESSES THEN WORK TO REMOVE POLLUTANTS. SEDIMENTATION PROCESSES REMOVE PARTICULATES, ORGANIC MATTER, AND METALS, WHILE DISSOLVED METALS AND NUTRIENTS ARE REMOVED THROUGH BIOLOGICAL UPTAKE. FURTHER MAINTENANCE INCLUDES SWEEPING OF ALL PAVED SURFACES AS WELL AS COLLECTION OF ANY LITTER. ALL DRAINAGE SWALES AND GREEN SPACES WILL BE MAINTAINED WITH REGULAR MOWING DURING GROWING SEASONS.
C4. WATER QUALITY MEASURES (I.E. STRUCTURES AND NON–STRUCTURAL) ARE IDENTIFIED ON THE STORM SEWER POLLUTION PREVENTION PLAN(S), SEE SHEET(S) 4, AND DETAILS SHOWN ON THE SITE DETAIL PLAN – SHEET 13
C5. MAINTENANCE OF ALL STORM WATER POLLUTION PREVENTION MEASURES WILL BE THE RESPONSIBILITY OF THE PROJECT OWNER UTILIZING PROCEDURES OUTLINED ON THESE PLAN(S). ANY GRASSED OR VEGETATED AREAS THAT EXPERIENCE EROSION FROM RAINFALL EVENTS SHOULD BE REPAIRED AND REVEGETATED AS SOON AS POSSIBLE.

A. EROSION OF THE DETENTION POND BANKS SHOULD BE ADDRESSED AS SOON AS IT BECOMES VISIBLE BY FILLING THE ERODED AREA WITH SUITABLE SOIL AND ESTABLISHING VEGETATION IMMEDIATELY, PREFERABLY BY SODDING. THE SAME MEASURE SHOULD BE USED FOR STEEP BANKS OR ANY BERMS OR SWALES. THE PONDS SHOULD ALSO BE MONITORED FOR SEDIMENT. IF THE BOTTOM OF THE POND RECEIVED SIGNIFICANT SEDIMENT (LESS THAN 2 FEET DEEP), THE SEDIMENT SHOULD BE REMOVED AND REPLACED ONSITE. AN ENGINEER SHOULD BE CONTACTED TO IDENTIFY THE SOURCE AND RECOMMEND REPAIRS.

B. PAVEMENT AREAS SHOULD BE MONITORED FOR POLLUTANTS; ANY LARGE QUANTITIES OF FLUID SUCH AS OIL, ANTIFREEZE, BRAKE FLUID, ETC. FOUND ON THE PAVEMENT SHOULD BE REPORTED TO THE OWNER. THE OWNER SHOULD CLEAN THE POLLUTANTS AND PREVENT THE SOURCE FROM ENTERING THE SITE IN THE FUTURE. FINALLY, PAVEMENTS SHOULD ALSO BE MONITORED FOR SEDIMENT COMING FROM VEGETATIVE AREAS. IF POST CONSTRUCTION EROSION IS OCCURRING, THE SOURCE SHOULD BE RE–STABILIZED AS SOON AS POSSIBLE BY SEEDING, SODDING OR MULCHING.

SITE CONTACT:
CONTACT: TODD PYATT
PYATT BUILDERS
168 W. CARMEL DRIVE
CARMEL, IN 46032
PHONE NO. (317) 379–0184

NOTICES AND PERMITS

1. THE CONTRACTOR SHALL BE RESPONSIBLE FOR OBTAINING OR VERIFYING THAT ALL PERMITS AND APPROVALS ARE OBTAINED FROM THE RESPECTIVE CITY, COUNTY OR STATE AGENCIES PRIOR TO STARTING ANY CONSTRUCTION.
2. IT SHALL BE THE CONTRACTOR'S RESPONSIBILITY TO DETERMINE THE EXACT LOCATION OF ALL UTILITIES IN THE VICINITY OF THE CONSTRUCTION AREA PRIOR TO STARTING ANY CONSTRUCTION.
3. IT SHALL BE THE CONTRACTOR'S RESPONSIBILITY FOR NOTIFICATION AND COORDINATION OF ALL CONSTRUCTION WITH THE RESPECTIVE UTILITY COMPANIES PRIOR TO STARTING ANY CONSTRUCTION.

NOTES:

1. ALL EROSION CONTROL MEASURES INDICATED SHALL BE MAINTAINED BY THE CONTRACTOR AND OWNER
2. THE CITY ENGINEER HAS THE RIGHT TO REQUIRE ADDITIONAL EROSION CONTROL MEASURES IN THE FIELD AS CONDITIONS WARRANT.
3. FOR EROSION CONTROL IMPLEMENTATION AND MAINTENANCE DIHEDULE SEE "EROSION CONTROL REQUIREMENTS" ON SHEET NO. 15.
4. ALL EROSION CONTROL PRACTICES SHALL BE IN ACCORDANCE WITH THE "INDIANA STORM WATER QUALITY MANUAL" AND THE SCS "FIELD OFFICE TECHNICAL GUIDE".

GENERAL NOTES:

1. FERTILIZER AND AGRICULTURAL LIMESTONE SHALL BE SPREAD UNIFORMLY OVER THE AREA TO BE SEEDED. THEY SHALL BE MIXED INTO THE TOP 2" OF SOIL WITH A DISK HARROW, ROTARY TILLER, OR OTHER APPROVED EQUIPMENT. FERTILIZER SHALL BE SPREAD AT THE RATE OF 400 POUNDS PER ACRE, AND AGRICULTURAL LIMESTONE AT THE RATE OF 1/2 TON PER ACRE UNLESS OTHERWISE SPECIFIED.

2. TEMPORARY SEEDING: THE AREAS WHERE STRIPPING, CUTS OR FILLS HAVE BEEN GRADED SHALL BE SEEDED FOR SILT AND EROSION PROTECTION WITH ONE OF THE FOLLOWING METHODS:

A. EARLY SPRING MIX: 100% OATS SEEDING RATE: 50 LBS./ACRE

B. SPRING OR LATE FALL MIX: 100% ANNUAL RYE SEEDING RATE: 50 LBS./ACRE

C. FALL MIX: 100% PERENNIAL RYE SEEDING RATE: 50 LBS./ACRE

STRAW OR MULCH AS APPROVED BY THE ENGINEER SHALL BE APPLIED AT A RATE OF 2 TONS PER ACRE.

3. MULCH–SEEDING: MULCH–SEEDING SHALL BE AS PER I.S.W.Q.M. SPECIFICATIONS, DATED OCTOBER 2007. FERTILIZER SHALL BE 12–12–12 APPLIED AT THE RATE OF 400 POUNDS PER ACRE. SEED MIXTURE SHALL BE 60 POUNDS PER ACRE OF PERENNIAL RYE GRASS AND 60 POUNDS PER ACRE OF KENTUCKY 31 FESCUE OR ALTA FESCUE.

4. WATER QUALITY MAINTENANCE– AT THE COMPLETION OF CONSTRUCTION ALL EXCESS SOIL AND OTHER MATERIAL SHALL BE REMOVED FROM THE SITE. TO ENSURE PROPER WATER QUALITY THE SITE AND ITS STORM WATER CONVEYANCE FACILITIES SHALL BE INSPECTED AT REGULAR INTERVALS AND AFTER ALL MAJOR RAIN EVENTS. THE STORM WATER CONVEYANCE SYSTEMS SHALL BE KEPT FREE OF DEBRIS AND FLUIDS THAT COULD POTENTIALLY POLLUTE STORM WATER RUNOFF.

5. PROJECT SITE OWNER OR THEIR REPRESENTATIVE, KNOWLEDGEABLE IN EROSION AND SEDIMENT CONTROL, SHALL INSPECT THE SITE FOR STORM WATER POLLUTION PREVENTION DEFICIENCIES AT LEAST WEEKLY AND AGAIN WITHIN 24 HOURS OF EVERY 1/2 INCH RAIN EVENT.

6. ALL HAZARDOUS MATERIALS USED DURING THE CONSTRUCTION OF THIS SITE SHALL BE HANDLED AT ALL TIMES ACCORDING TO RECOMMENDATIONS IN THE MATERIAL SAFETY DATA SHEETS PROVIDED BY THE MANUFACTURER. SITE CONTRACTOR TO IMPLEMENT A SPILL PREVENTION PLAN PRIOR TO START OF CONSTRUCTION.

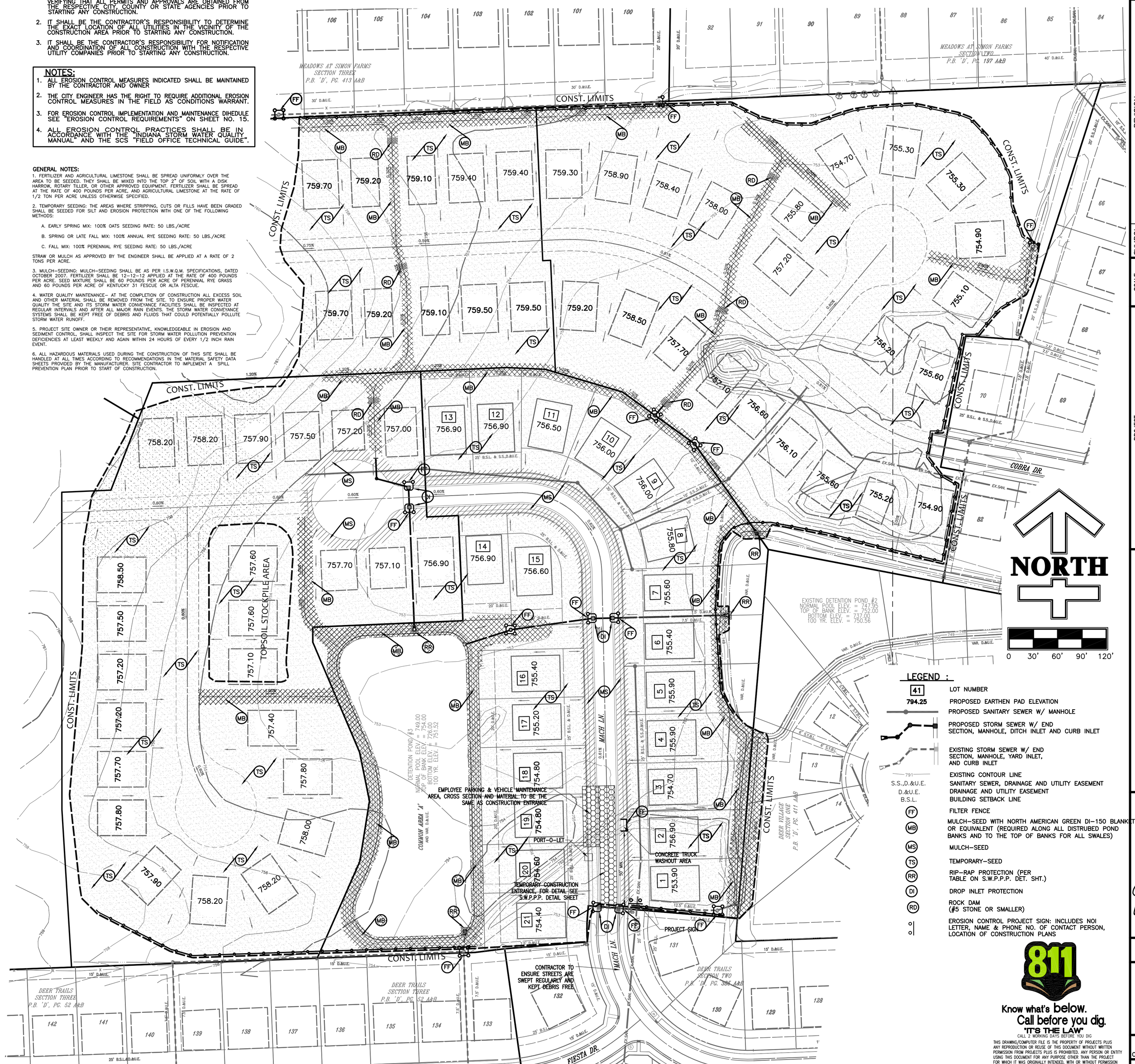

LEGEND :

41	LOT NUMBER
794.25	PROPOSED EARTHEN PAD ELEVATION
	PROPOSED SANITARY SEWER W/ MANHOLE
	PROPOSED STORM SEWER W/ END SECTION, MANHOLE, DITCH INLET AND CURB INLET
	EXISTING STORM SEWER W/ END SECTION, MANHOLE, YARD INLET, AND CURB INLET
791	EXISTING CONTOUR LINE
S.S.,D.&U.E.	SANITARY SEWER, DRAINAGE AND UTILITY EASEMENT
D.&U.E.	DRAINAGE AND UTILITY EASEMENT
B.S.L.	BUILDING SETBACK LINE
FF	FILTER FENCE
MB	MULCH–SEED WITH NORTH AMERICAN GREEN DI–150 BLANKET OR EQUIVALENT (REQUIRED ALONG ALL DISTRUBED POND BANKS AND TO THE TOP OF BANKS FOR ALL SWALES)
MS	MULCH–SEED
TS	TEMPORARY–SEED
RR	RIP–RAP PROTECTION (PER TABLE ON S.W.P.P.P. DET. SHT.)
DI	DROP INLET PROTECTION
RD	ROCK DAM (#5 STONE OR SMALLER)
	EROSION CONTROL PROJECT SIGN: INCLUDES NOI LETTER, NAME & PHONE NO. OF CONTACT PERSON, LOCATION OF CONSTRUCTION PLANS

811
Know what's below.
Call before you dig.
"IT'S THE LAW"
CALL 2 WORKING DAYS BEFORE YOU DIG

THIS DRAWING/COMPUTER FILE IS THE PROPERTY OF PROJECTS PLUS ANY REPRODUCTION OR REUSE OF THIS DOCUMENT WITHOUT WRITTEN PERMISSION FROM PROJECTS PLUS IS PROHIBITED. ANY PERSON OR ENTITY USING THIS DOCUMENT FOR ANY PURPOSE OTHER THAN THE PROJECT FOR WHICH IT WAS ORIGINALLY INTENDED, WITH OR WITHOUT PERMISSION FROM PROJECTS PLUS, BY ITS USE AGREES TO INDEMNIFY AND HOLD HARMLESS PROJECTS PLUS FROM ANY LOSS, INCLUDING BUT NOT LIMITED TO ATTORNEY'S FEES, OCCURRING FROM THEIR USE.

SYMBOL	REVISION	DATE

SCALE 1"=60'
DRAWN JPH
CHECKED JKS
CERTIFIED JKS

PROJECT
DEER MEADOWS – SECTION ONE
CITY OF FRANKLIN, JOHNSON COUNTY, INDIANA

TITLE
STORM WATER POLLUTION PREVENTION PLAN

PROJECTS plus
GREENWOOD SURVEYING COMPANY
CIVIL ENGINEERING – LAND SURVEYING
LAND PLANNING – CONSTRUCTION MANAGEMENT 46142
2355 Fairview Place Suite A – Greenwood, Indiana
(317)–882–5005

SEAL
JEFFERY K. SMITH
REGISTERED No. 19419 STATE OF INDIANA
PROFESSIONAL ENGINEER
11/12/15

JOB NUMBER
15015.01

SHEET
4
OF 15 SHEETS

DATE
NOVEMBER 12, 2015

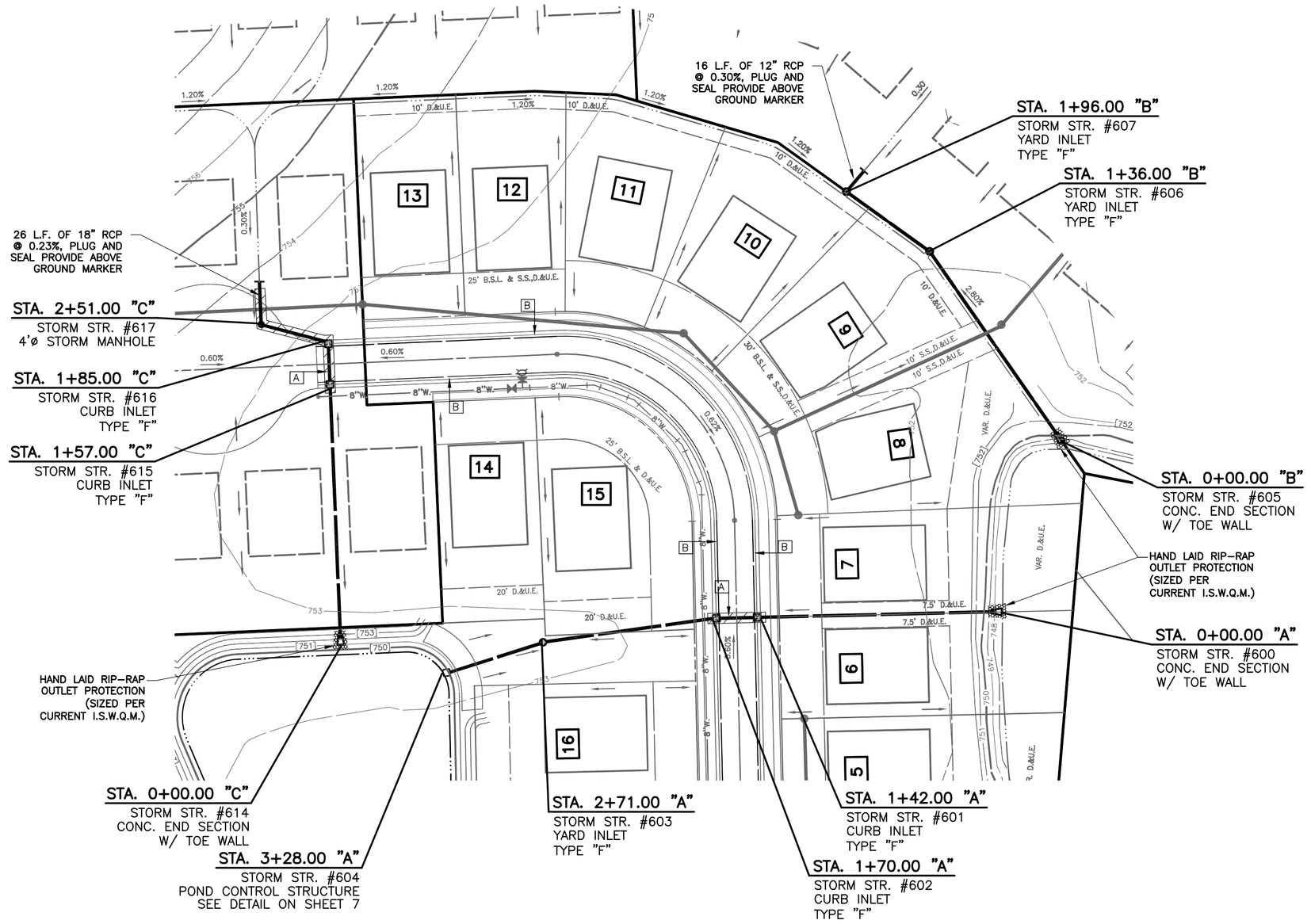

LEGEND :

27	LOT NUMBER
	PROPOSED SANITARY SEWER W/ MANHOLE
	PROPOSED STORM SEWER W/ END SECTION, DITCH INLET AND CURB INLET
8"W	PROPOSED WATER LINE W/ VALVE AND FIRE HYDRANT AND ASSEMBLY
752	EXISTING CONTOUR LINE
S.S.,D.&U.E.	SANITARY SEWER, DRAINAGE AND UTILITY EASEMENT
D.&U.E.	DRAINAGE AND UTILITY EASEMENT
B.S.L.	BUILDING SETBACK LINE
	GRANULAR BACKFILL
A	GRANULAR BACKFILL REQUIRED
B	6" PVC UNDERDRAIN (TYP.)

NORTH

0 25' 50' 75' 100'

STORM SEWER NOTES

1. THE STORM WATER QUALITY UNIT(S) SHOWN ON THESE PLANS SHALL BE THE UNIT INSTALLED DURING THE DEVELOPMENT OF THIS PROPERTY. NO SUBSTITUTIONS SHALL BE PERMITTED.
2. ALL CASTINGS SHALL HAVE STANDARD "ENVIRONMENTALLY FRIENDLY LOGOS" EMBOSSED INTO THE INLET.
3. ALL UTILITY CROSSINGS OR TRENCHES WITHIN (5) FEET OF THE EDGE OF PAVEMENT SHALL BE BACKFILLED TO THE SUBGRADE WITH GRANULAR MATERIAL (THE UPPERMOST 18" OF GRANULAR MATERIAL SHALL BE #53 STONE) AND COMPACTED IN SIX INCH LIFTS.
4. ALL EXISTING FIELD TILES DISTURBED DURING CONSTRUCTION SHALL BE RE-DIRECTED TO THE NEAREST STORM STRUCTURE AND SHOWN ON AS-BUILT DRAWINGS.

NOTICES AND PERMITS

1. THE CONTRACTOR SHALL BE RESPONSIBLE FOR OBTAINING OR VERIFYING THAT ALL PERMITS AND APPROVALS ARE OBTAINED FROM THE RESPECTIVE CITY, COUNTY OR STATE AGENCIES PRIOR TO STARTING ANY CONSTRUCTION.
2. IT SHALL BE THE CONTRACTOR'S RESPONSIBILITY TO DETERMINE THE EXACT LOCATION OF ALL UTILITIES IN THE VICINITY OF THE CONSTRUCTION AREA PRIOR TO STARTING ANY CONSTRUCTION.
3. IT SHALL BE THE CONTRACTOR'S RESPONSIBILITY FOR NOTIFICATION AND COORDINATION OF ALL CONSTRUCTION WITH THE RESPECTIVE UTILITY COMPANIES PRIOR TO STARTING ANY CONSTRUCTION.

FOR EASEMENT LOCATIONS AND DESIGNATIONS
SEE FINAL RECORD PLAT AND RESTRICTIONS

BENCHMARK: ELEV.=755.95

1. NORTH RIM ON MANHOLE NO. 8 IN DEER TRACE SUBDIVISION.

T.B.M. ELEV.=753.39

1. TOP OF EXISTING SANITARY MANHOLE AT CORNER OF LOT #29 IN DEER RUN SEC. 2.

811
Know what's below.
Call before you dig.
"IT'S THE LAW"
CALL 2 WORKING DAYS BEFORE YOU DIG

THIS DRAWING/COMPUTER FILE IS THE PROPERTY OF PROJECTS PLUS ANY REPRODUCTION OR REUSE OF THIS DOCUMENT WITHOUT WRITTEN PERMISSION FROM PROJECTS PLUS IS PROHIBITED. ANY PERSON OR ENTITY USING THIS DOCUMENT FOR ANY PURPOSE OTHER THAN THE PROJECT FOR WHICH IT WAS ORIGINALLY INTENDED, WITH OR WITHOUT PERMISSION FROM PROJECTS PLUS, BY ITS USE AGREES TO INDEMNIFY AND HOLD HARMLESS PROJECTS PLUS FROM ANY LOSS, INCLUDING BUT NOT LMITED TO ATTORNEY'S FEES, OCCURRING FROM THEIR USE.

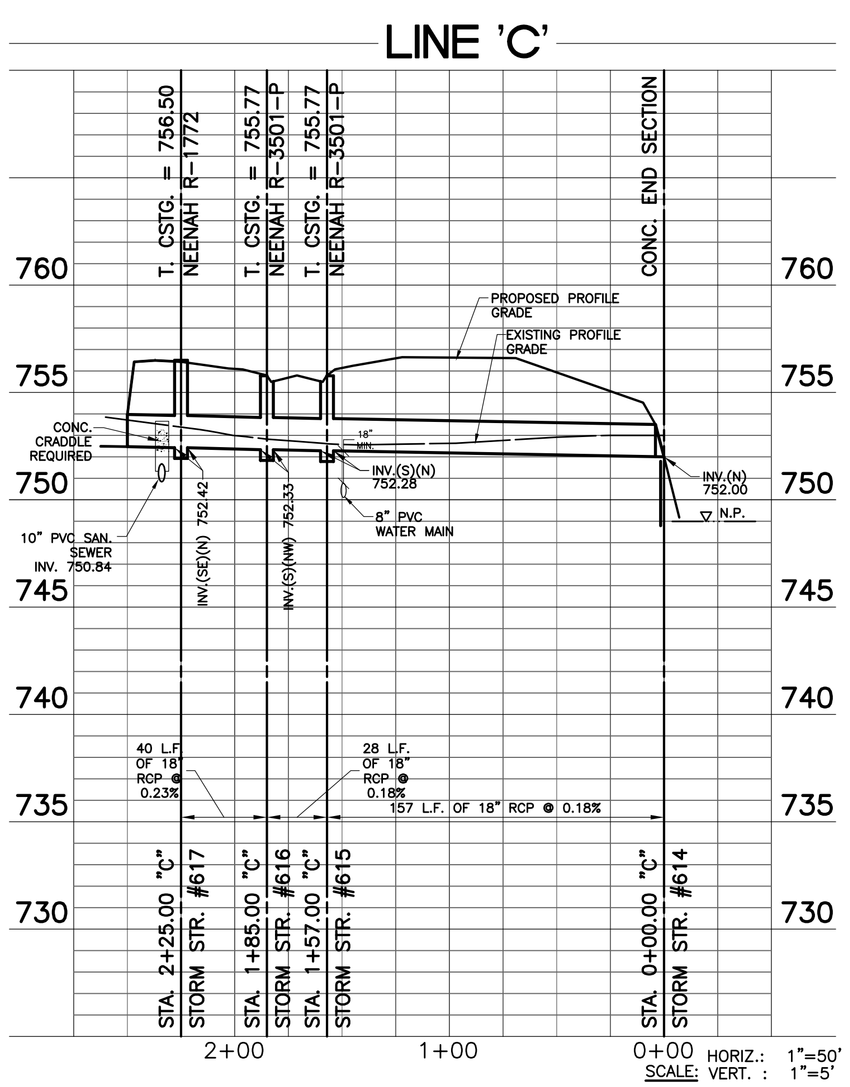

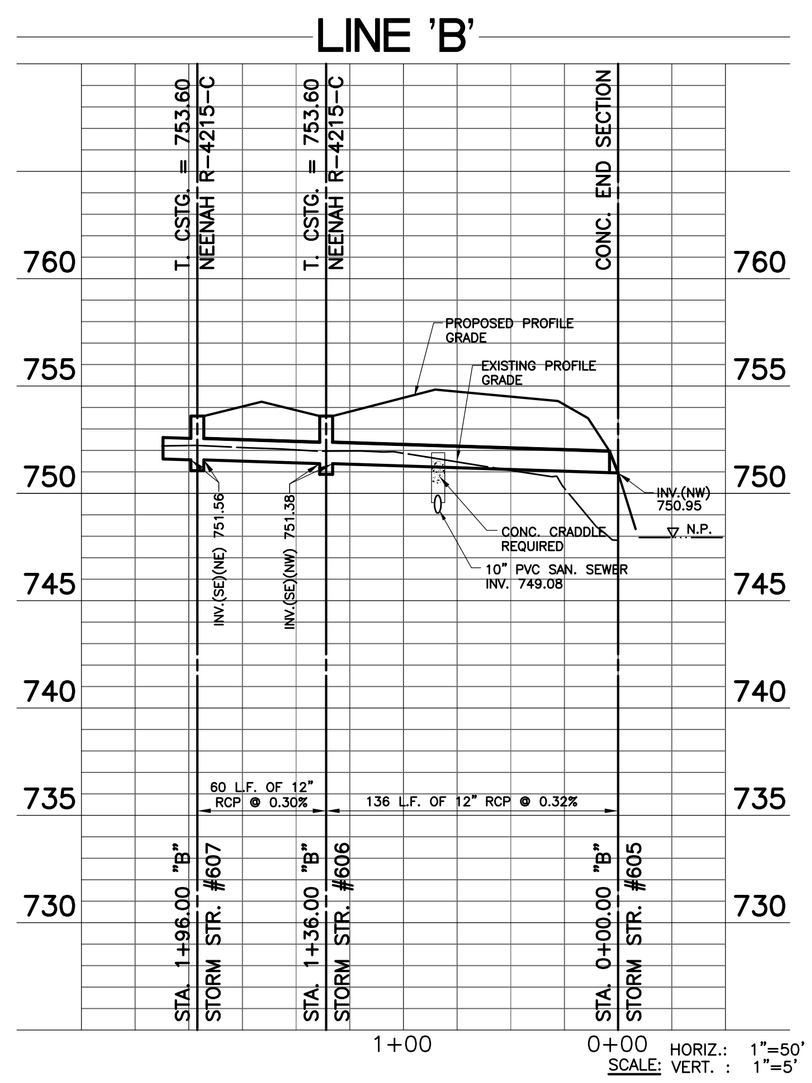

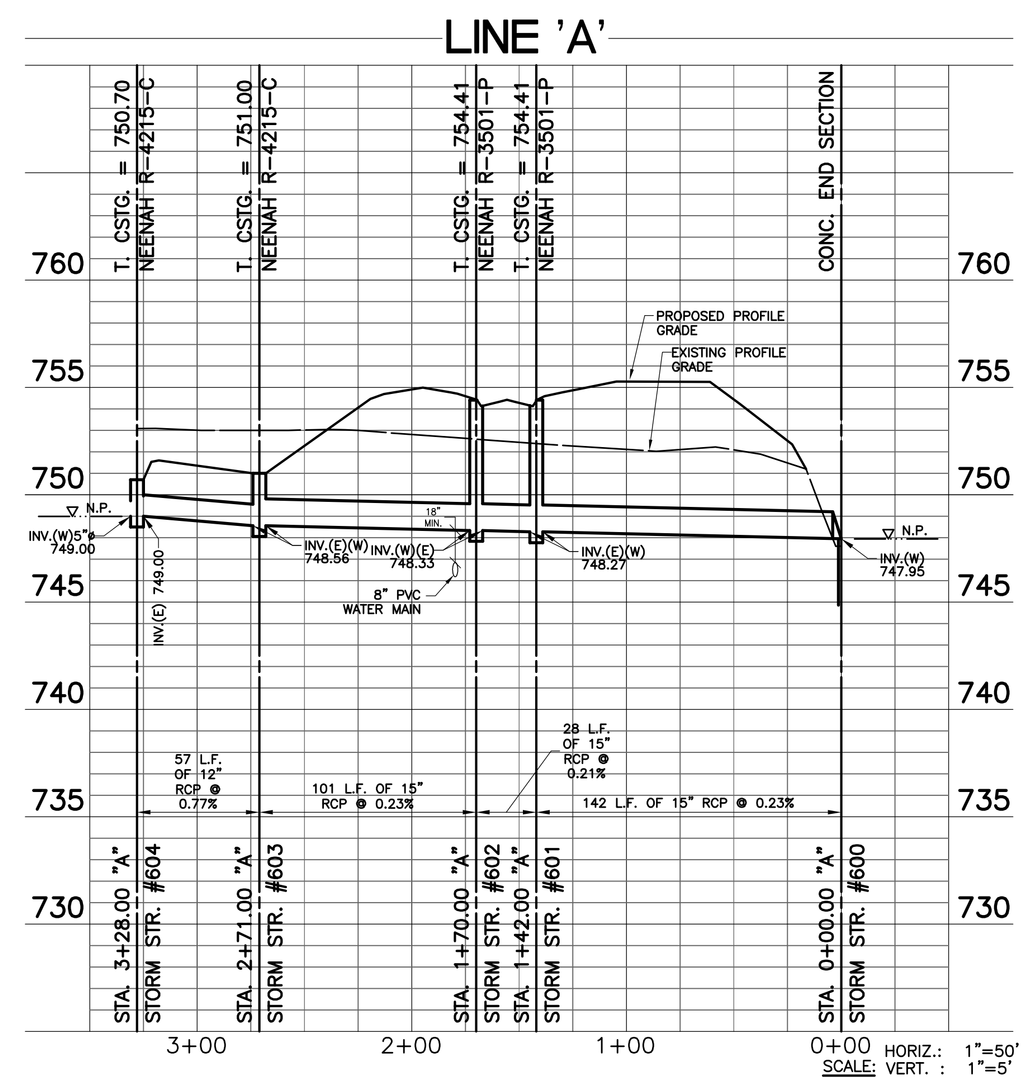

DATE	REVISION	SYMBOL

SCALE AS SHOWN | DRAWN JPH | CHECKED JKS | CERTIFIED JKS

PROJECT
DEER MEADOWS – SECTION ONE
CITY OF FRANKLIN, JOHNSON COUNTY, INDIANA

TITLE
STORM SEWER PLAN AND PROFILE

PROJECTS plus
GREENWOOD SURVEYING COMPANY
CIVIL ENGINEERING – LAND SURVEYING
LAND PLANNING – CONSTRUCTION MANAGEMENT
2535 Fairview Place, Suite A – Greenwood, Indiana 46142
(317)-882-5003

SEAL
JEFFERY K. SMITH
REGISTERED
No. 19419
STATE OF INDIANA
PROFESSIONAL ENGINEER
11/12/15

JOB NUMBER
15015.01

SHEET
5
OF 15 SHEETS

DATE
NOVEMBER 12, 2015

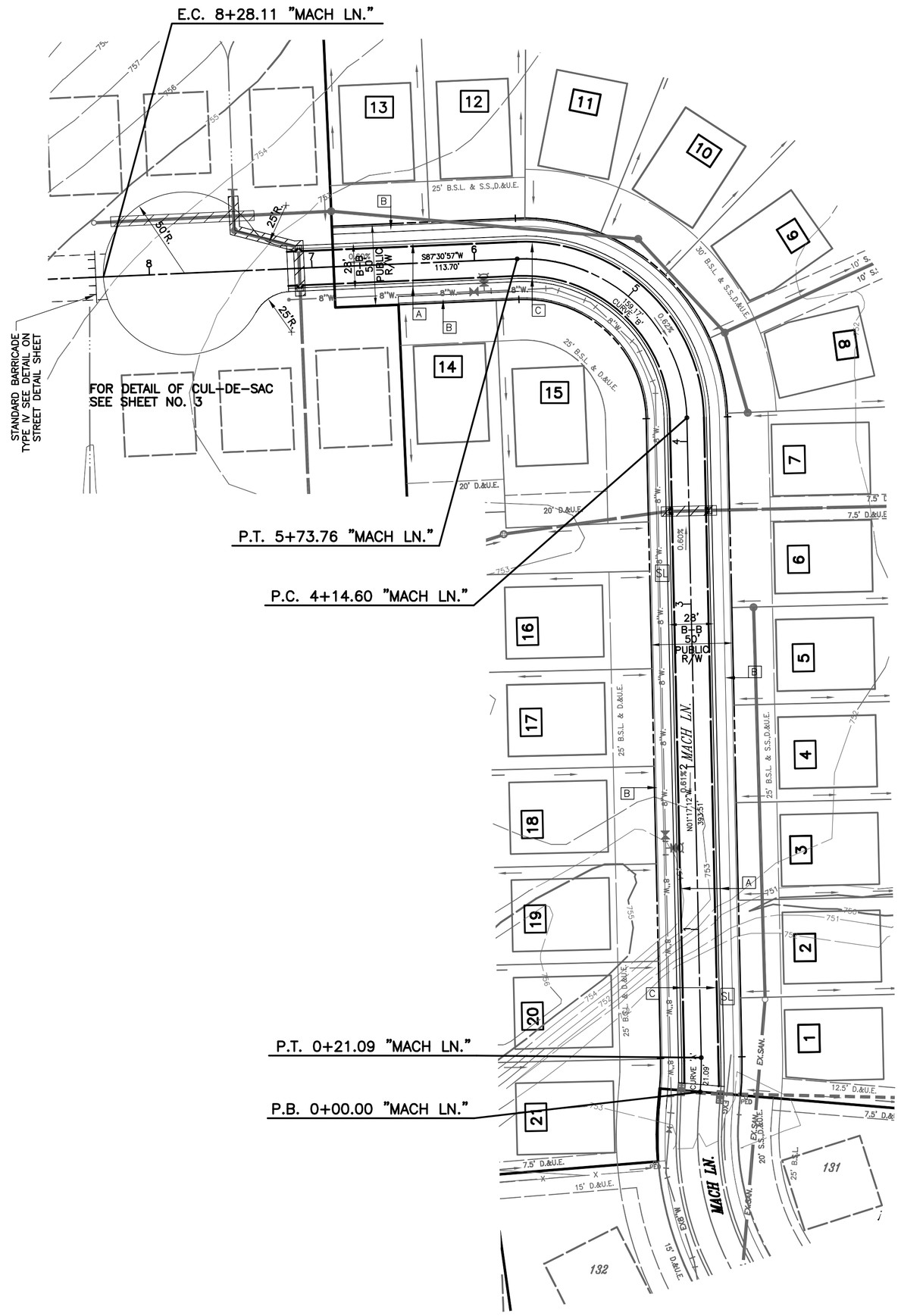

LEGEND :

- 27 — LOT NUMBER
- PROPOSED SANITARY SEWER W/ MANHOLE
- PROPOSED STORM SEWER W/ END SECTION, DITCH INLET AND CURB INLET
- 8"W — PROPOSED WATER LINE W/ VALVE AND FIRE HYDRANT AND ASSEMBLY
- PROPOSED 6" PVC UNDERDRAIN
- 752 — EXISTING CONTOUR LINE
- S.S.,D.&U.E. — SANITARY SEWER, DRAINAGE AND UTILITY EASEMENT
- D.&U.E. — DRAINAGE AND UTILITY EASEMENT
- B.S.L. — BUILDING SETBACK LINE
- R/W — RIGHT-OF-WAY
- PROPOSED HANDICAP ACCESS RAMP
- TEMPORARY BARRICADE REQUIRED
- GRANULAR BACKFILL
- N — PROPOSED STREET NAME SIGN
- S — PROPOSED STOP SIGN
- SL — PROPOSED SPEED LIMIT SIGN (25 M.P.H.)
- LIGHT — PROPOSED AREA LIGHT
- A — 2' CONC. ROLL CURB (TYP.)
- B — 4' CONC. SIDEWALK (TYP.)
- C — 6" PVC UNDERDRAIN (TYP.)
- D — GRANULAR BACKFILL REQUIRED

NORTH

0 25' 50' 75' 100'

CENTERLINE CURVE DATA TABLE						
CURVE	DELTA	RADIUS	LENGTH	TANGENT	CH. LEN.	CH. BRG.
A	6°02'28"	200.00'	21.09'	10.55'	21.08'	N01°44'02"E
B	91°11'51"	100.00'	159.17'	102.11'	142.89'	N46°53'08"W

NOTICES AND PERMITS

1. THE CONTRACTOR SHALL BE RESPONSIBLE FOR OBTAINING OR VERIFYING THAT ALL PERMITS AND APPROVALS ARE OBTAINED FROM THE RESPECTIVE CITY, COUNTY OR STATE AGENCIES PRIOR TO STARTING ANY CONSTRUCTION.
2. IT SHALL BE THE CONTRACTOR'S RESPONSIBILITY TO DETERMINE THE EXACT LOCATION OF ALL UTILITIES IN THE VICINITY OF THE CONSTRUCTION AREA PRIOR TO STARTING ANY CONSTRUCTION.
3. IT SHALL BE THE CONTRACTOR'S RESPONSIBILITY FOR NOTIFICATION AND COORDINATION OF ALL CONSTRUCTION WITH THE RESPECTIVE UTILITY COMPANIES PRIOR TO STARTING ANY CONSTRUCTION.

NOTES

1. ALL UTILITY CROSSINGS OR TRENCHES WITHIN (5) FEET OF THE EDGE OF PAVEMENT SHALL BE BACKFILLED TO THE SUBGRADE WITH GRANULAR MATERIAL (THE UPPERMOST 48" OF GRANULAR MATERIAL SHALL BE #53 STONE) AND COMPACTED IN SIX INCH LIFTS.
2. ALL SIGNS AND SUPPORTING STRUCTURES SHALL CONFORM TO THE LATEST EDITIONS OF THE INDIANA MANUAL OF UNIFORM TRAFFIC CONTROL DEVICES (I.M.U.T.C.D.)
3. THE PAVING/SUBGRADE CONTRACTOR SHALL NOTIFY THE ENGINEERING DEPARTMENT AT LEAST 24 HOURS PRIOR TO PROOF ROLL ON THE PROPOSED STREETS.
4. FOR HANDICAP ACCESS RAMP DETAILS SEE ON STREET DETAIL SHEET.

FOR EASEMENT LOCATIONS AND DESIGNATIONS SEE FINAL RECORD PLAT AND RESTRICTIONS

BENCHMARK: ELEV.=755.95

1. NORTH RIM ON MANHOLE NO. 8 IN DEER TRACE SUBDIVISION.

T.B.M. ELEV.=753.39

1. TOP OF EXISTING SANITARY MANHOLE AT CORNER OF LOT #29 IN DEER RUN SEC. 2.

811

Know what's below. Call before you dig.

"IT'S THE LAW"

CALL 2 WORKING DAYS BEFORE YOU DIG

THIS DRAWING/COMPUTER FILE IS THE PROPERTY OF PROJECTS PLUS ANY REPRODUCTION OR REUSE OF THIS DOCUMENT WITHOUT WRITTEN PERMISSION FROM PROJECTS PLUS IS PROHIBITED. ANY PERSON OR ENTITY USING THIS DOCUMENT FOR ANY PURPOSE OTHER THAN THE PROJECT FOR WHICH IT WAS ORIGINALLY INTENDED, WITH OR WITHOUT PERMISSION FROM PROJECTS PLUS, BY ITS USE AGREES TO INDEMNIFY AND HOLD HARMLESS PROJECTS PLUS FROM ANY LOSS, INCLUDING BUT NOT LIMITED TO ATTORNEY'S FEES, OCCURRING FROM THEIR USE.

"MACH LN."

(TYPICAL STREET SECTION)

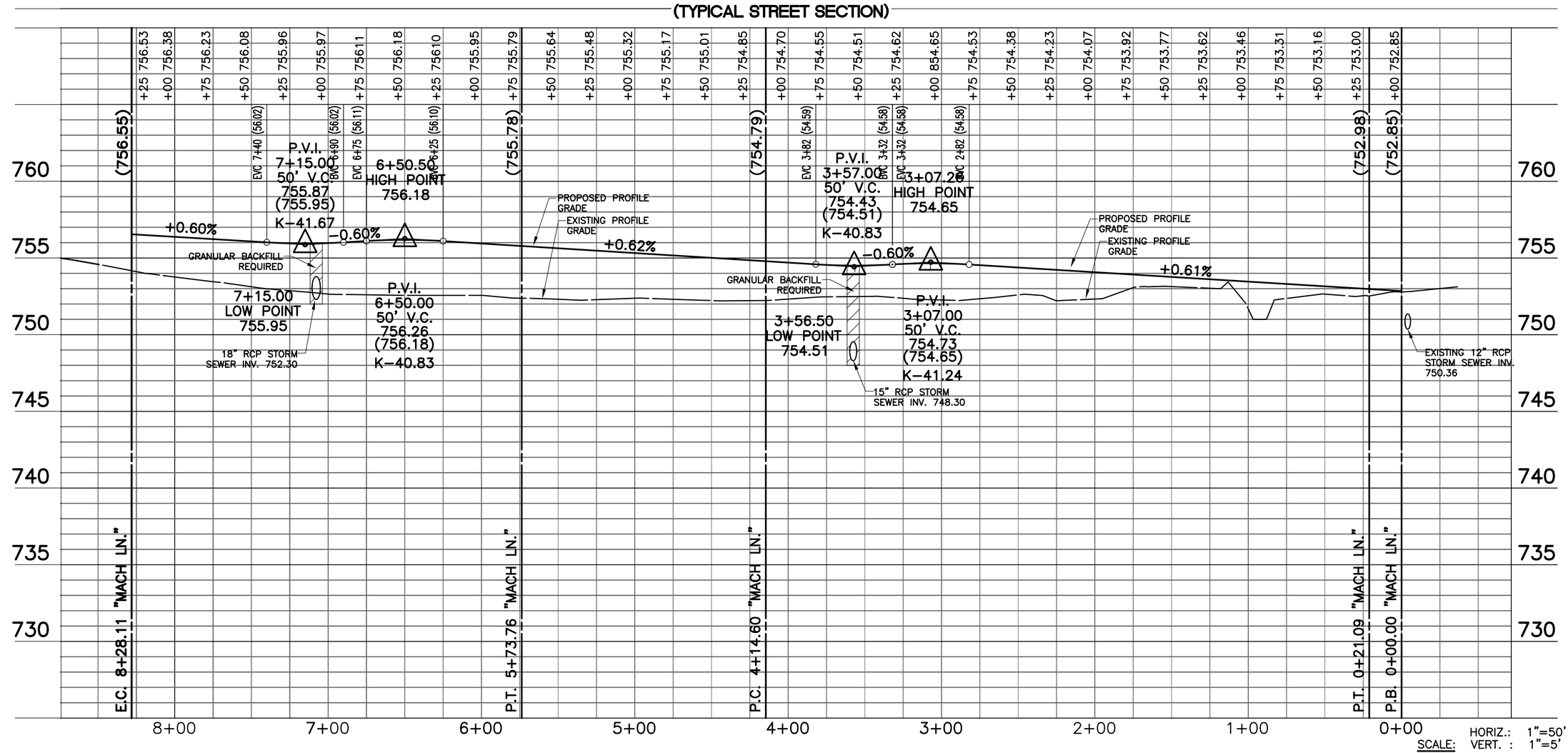

SCALE: HORIZ.: 1"=50' VERT.: 1"=5'

SYMBOL	REVISION	DATE

SCALE AS SHOWN | DRAWN JPH | CHECKED JKS | CERTIFIED JKS

PROJECT: DEER MEADOWS – SECTION ONE, CITY OF FRANKLIN, JOHNSON COUNTY, INDIANA

TITLE: STREET PLAN AND PROFILE

PROJECTS plus
GREENWOOD SURVEYING COMPANY
CIVIL ENGINEERING – LAND SURVEYING
LAND PLANNING – CONSTRUCTION MANAGEMENT
2355 Fairview Place, Suite A – Greenwood, Indiana 46142
(317)-882-5003

SEAL: JEFFERY K. SMITH REGISTERED No. 19419 STATE OF INDIANA PROFESSIONAL ENGINEER — 11/12/15

JOB NUMBER 15015.01

SHEET 6 OF 15 SHEETS

DATE NOVEMBER 12, 2015

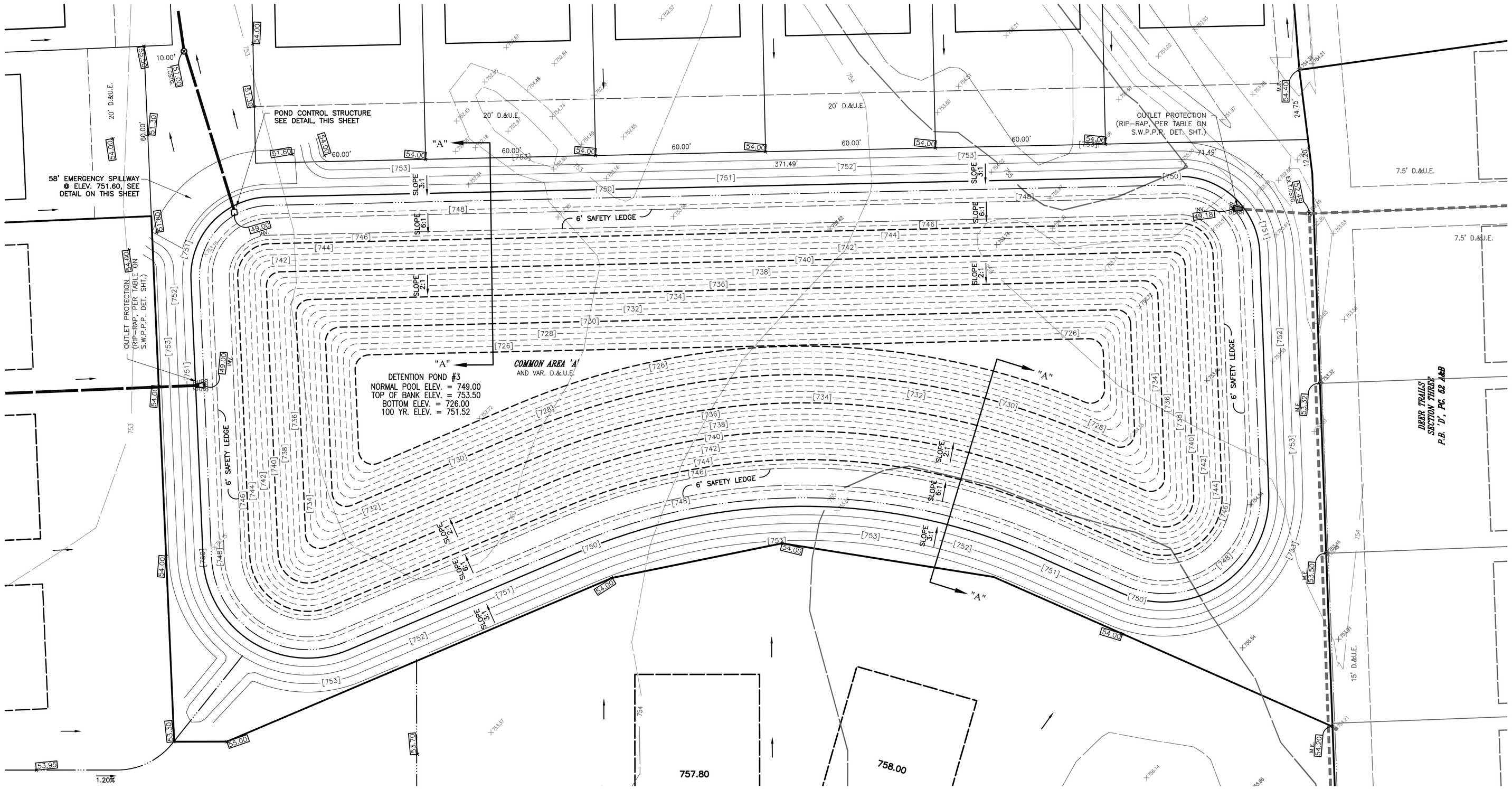

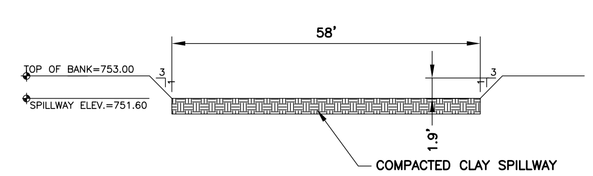

POND #1 EMERGENCY SPILLWAY

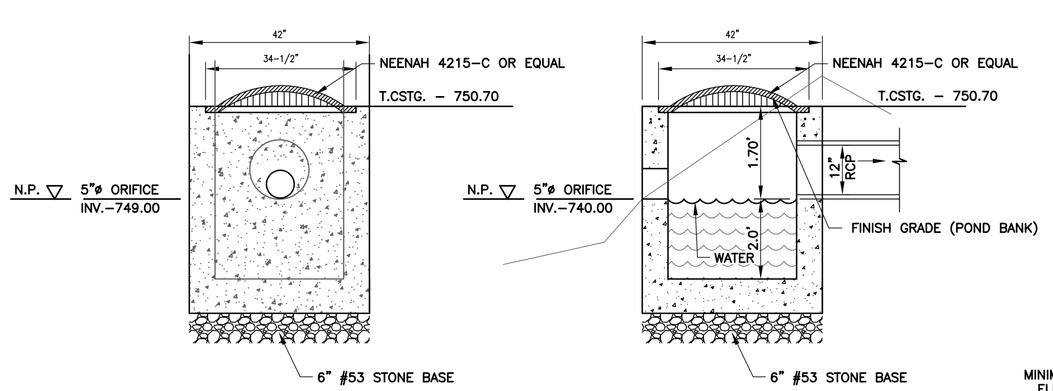

POND #3 CONTROL STRUCTURE

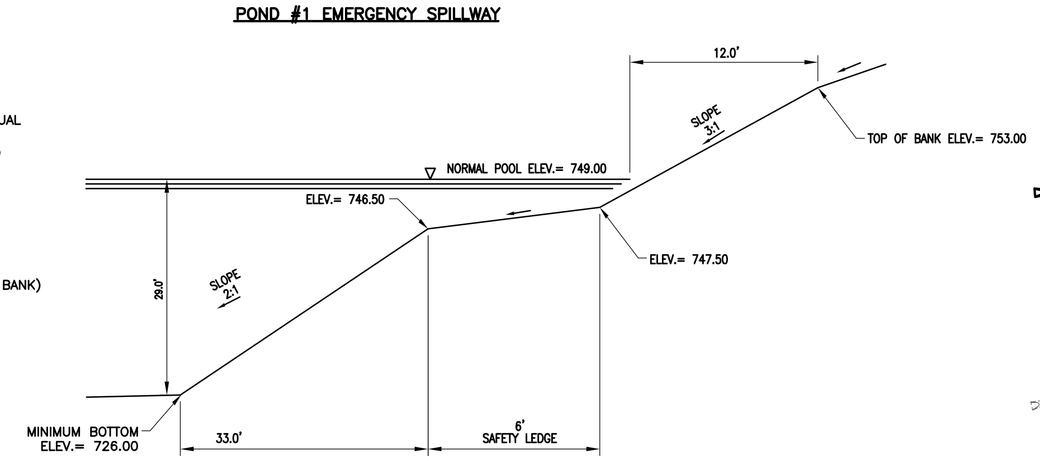

POND SECTION A-A

LEGEND :

27	LOT NUMBER
754.50	PROPOSED EARTHEN PAD ELEVATION
	PROPOSED STORM SEWER W/ END SECTION, MANHOLE, DITCH INLET AND CURB INLET
(406)	STRUCTURE NUMBER
	PROPOSED FLOWLINE
64.65	PROPOSED SPOT ELEVATION
M.E. 64.64	MATCH EXISTING GRADE
756	PROPOSED CONTOUR LINE
	EXISTING STORM SEWER W/ END SECTION, MANHOLE, YARD INLET, AND CURB INLET
×753.68	EXISTING SPOT ELEVATION
752	EXISTING CONTOUR LINE
S.S.,D.&U.E.	SANITARY SEWER, DRAINAGE AND UTILITY EASEMENT
D.&U.E.	DRAINAGE AND UTILITY EASEMENT
B.S.L.	BUILDING SETBACK LINE

NOTICES AND PERMITS

1. THE CONTRACTOR SHALL BE RESPONSIBLE FOR OBTAINING OR VERIFYING THAT ALL PERMITS AND APPROVALS ARE OBTAINED FROM THE RESPECTIVE CITY, COUNTY OR STATE AGENCIES PRIOR TO STARTING ANY CONSTRUCTION.
2. IT SHALL BE THE CONTRACTOR'S RESPONSIBILITY TO DETERMINE THE EXACT LOCATION OF ALL UTILITIES IN THE VICINITY OF THE CONSTRUCTION AREA PRIOR TO STARTING ANY CONSTRUCTION.
3. IT SHALL BE THE CONTRACTOR'S RESPONSIBILITY FOR NOTIFICATION AND COORDINATION OF ALL CONSTRUCTION WITH THE RESPECTIVE UTILITY COMPANIES PRIOR TO STARTING ANY CONSTRUCTION.

NOTES

1. ALL EXISTING FIELD TILES DISTURBED DURING CONSTRUCTION SHALL BE RE-DIRECTED TO THE NEAREST STORM STRUCTURE AND SHOWN ON AS-BUILT DRAWINGS.

FOR EASEMENT LOCATIONS AND DESIGNATIONS SEE FINAL RECORD PLAT AND RESTRICTIONS

BENCHMARK: ELEV.=755.95

1. NORTH RIM ON MANHOLE NO. 8 IN DEER TRACE SUBDIVISION.

T.B.M. ELEV.=753.39

1. TOP OF EXISTING SANITARY MANHOLE AT CORNER OF LOT #29 IN DEER RUN SEC. 2.

811
Know what's below.
Call before you dig.
"IT'S THE LAW"
CALL 2 WORKING DAYS BEFORE YOU DIG

THIS DRAWING/COMPUTER FILE IS THE PROPERTY OF PROJECTS PLUS ANY REPRODUCTION OR REUSE OF THIS DOCUMENT WITHOUT WRITTEN PERMISSION FROM PROJECTS PLUS IS PROHIBITED. ANY PERSON OR ENTITY USING THIS DOCUMENT FOR ANY PURPOSE OTHER THAN THE PROJECT FOR WHICH IT WAS ORIGINALLY INTENDED, WITH OR WITHOUT PERMISSION FROM PROJECTS PLUS, BY IT'S USE AGREES TO INDEMNIFY AND HOLD HARMLESS PROJECTS PLUS FROM ANY LOSS, INCLUDING BUT NOT LIMITED TO ATTORNEY'S FEES, OCCURRING FROM THEIR USE.

NORTH
0 10' 20' 30' 40'
SCALE: 1"=20'

SYMBOL	REVISION	DATE

SCALE 1"=20' | DRAWN JPH | CHECKED JKS | CERTIFIED JKS

PROJECT
DEER MEADOWS – SECTION ONE
CITY OF FRANKLIN, JOHNSON COUNTY, INDIANA

TITLE
POND DETAIL

PROJECTS plus
GREENWOOD SURVEYING COMPANY
CIVIL ENGINEERING – LAND SURVEYING
LAND PLANNING – CONSTRUCTION MANAGEMENT
2535 Fairview Place, Suite A – Greenwood, Indiana 46142
(317)-882-5003

SEAL
JEFFERY K. SMITH
REGISTERED
No. 19419
STATE OF INDIANA
PROFESSIONAL ENGINEER
11/12/15

JOB NUMBER
15015.01

SHEET
7
OF 15 SHEETS

DATE
NOVEMBER 12, 2015

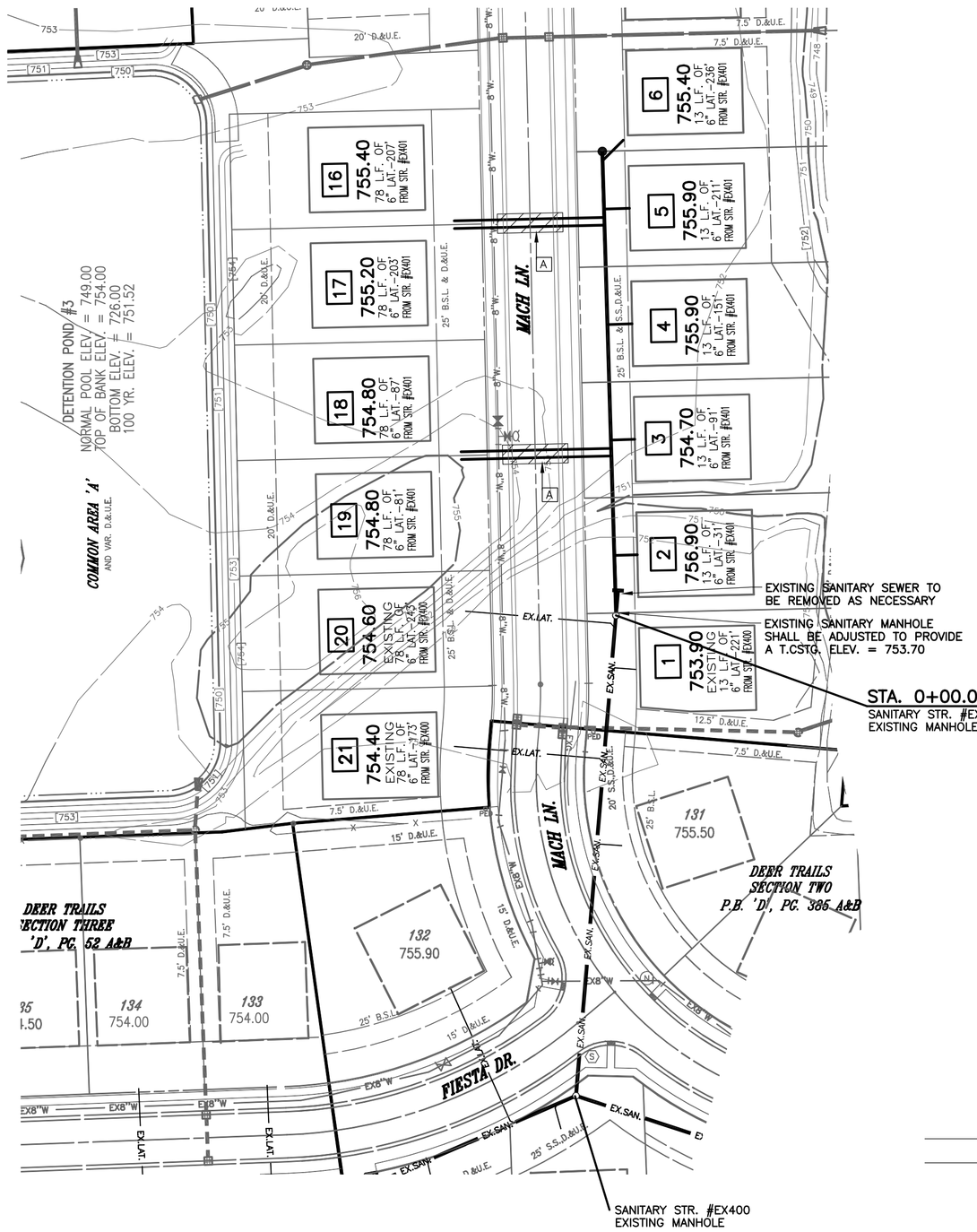

GENERAL NOTES

1. NONE OF THE SANITARY SEWER IN THIS PROJECT ARE TO BE CONSTRUCTED UNTIL THE LETTER OF APPROVAL FROM THE DEPARTMENT OF ENVIRONMENTAL MANAGEMENT HAS BEEN RECEIVED BY THE ENGINEER AND A COPY FORWARDED TO THE CONTRACTOR.
2. THE CONTRACTOR SHALL BE RESPONSIBLE FOR OBTAINING OR VERIFYING THAT ALL PERMITS AND APPROVALS ARE OBTAINED FROM THE RESPECTIVE CITY, COUNTY OR STATE AGENCIES PRIOR TO STARTING ANY CONSTRUCTION.
3. IT SHALL BE THE CONTRACTOR'S RESPONSIBILITY TO DETERMINE THE EXACT LOCATION OF ALL UTILITIES IN THE VICINITY OF THE CONSTRUCTION AREA PRIOR TO STARTING ANY CONSTRUCTION.
4. IT SHALL BE THE CONTRACTOR'S RESPONSIBILITY FOR NOTIFICATION AND COORDINATION OF ALL CONSTRUCTION WITH THE RESPECTIVE UTILITY COMPANIES PRIOR TO STARTING ANY CONSTRUCTION.
5. IF ALTERNATE STRUCTURES ARE TO BE SUPPLIED, SHOP DRAWINGS MUST BE SUBMITTED TO THE ENGINEER AND APPROVED IN WRITING PRIOR TO INSTALLATION.
6. SANITARY LATERALS SHALL BE LAID AT A GRADE NOT LESS THAN 1.00% TO A DEPTH AT THE PROPERTY LINE OF NOT LESS THAN 6.00 FEET
7. IT IS THE CONTRACTOR'S RESPONSIBILITY TO MAKE AVAILABLE TO THE BUILDER, DIMENSIONS TO LOCATE SEWER STUBS AND/OR ANY UTILITY CONDUIT STUBS INSTALLED.
8. ALL UTILITY CROSSINGS OR TRENCHES WITHIN (5) FEET OF THE EDGE OF OF PAVEMENT SHALL BE BACKFILLED TO THE SUBGRADE WITH GRANULAR MATERIAL. THE UPPERMOST 48" OF GRANULAR MATERIAL SHALL BE #53 STONE) AND COMPACTED IN SIX INCH LIFTS.
9. CONTRACTOR SHALL MAINTAIN A MINIMUM OF 18" VERTICAL BETWEEN WATER MAINS, SANITARY & STORM SEWERS, ALSO A MINIMUM OF 10' HORIZONTAL SEPARATION BETWEEN WATER MAINS & SANITARY SEWER
10. IT SHALL BE THE CONTRACTOR'S RESPONSIBILITY TO VERIFY THE EXACT LOCATION OF SEWER PIPE STUBS AND INVERTS. IF THE CONTRACTOR SHOULD FIND ANY DIFFERENCES THAN THE INFORMATION SHOWN ON THESE PLANS THE ENGINEER SHALL BE NOTIFIED.

NOTICES AND PERMITS

1. THE CONTRACTOR SHALL BE RESPONSIBLE FOR OBTAINING OR VERIFYING THAT ALL PERMITS AND APPROVALS ARE OBTAINED FROM THE RESPECTIVE CITY, COUNTY OR STATE AGENCIES PRIOR TO STARTING ANY CONSTRUCTION.
2. IT SHALL BE THE CONTRACTOR'S RESPONSIBILITY TO DETERMINE THE EXACT LOCATION OF ALL UTILITIES IN THE VICINITY OF THE CONSTRUCTION AREA PRIOR TO STARTING ANY CONSTRUCTION.
3. IT SHALL BE THE CONTRACTOR'S RESPONSIBILITY FOR NOTIFICATION AND COORDINATION OF ALL CONSTRUCTION WITH THE RESPECTIVE UTILITY COMPANIES PRIOR TO STARTING ANY CONSTRUCTION.

FOR EASEMENT LOCATIONS AND DESIGNATIONS SEE FINAL RECORD PLAT AND RESTRICTIONS

BENCHMARK: ELEV.=755.95

1. NORTH RIM ON MANHOLE NO. 8 IN DEER TRACE SUBDIVISION.

T.B.M. ELEV.=753.39

1- TOP OF EXISTING SANITARY MANHOLE AT CORNER OF LOT #29 IN DEER RUN SEC. 2.

LEGEND :

27	LOT NUMBER
754.50	PROPOSED EARTHEN PAD ELEVATION
	PROPOSED SANITARY SEWER W/ MANHOLE
	PROPOSED STORM SEWER W/ END SECTION, DITCH INLET AND CURB INLET
8"W	PROPOSED WATER LINE W/ VALVE AND FIRE HYDRANT AND ASSEMBLY
	PROPOSED 6" SERVICE LATERAL
65 L.F. OF 6"-LAT. 205' FROM STR. #414	PROPOSED LATERAL DATA
752	EXISTING CONTOUR LINE
S.S.,D.&U.E.	SANITARY SEWER, DRAINAGE AND UTILITY EASEMENT
D.&U.E.	DRAINAGE AND UTILITY EASEMENT
B.S.L.	BUILDING SETBACK LINE
	GRANULAR BACKFILL
A	GRANULAR BACKFILL REQUIRED

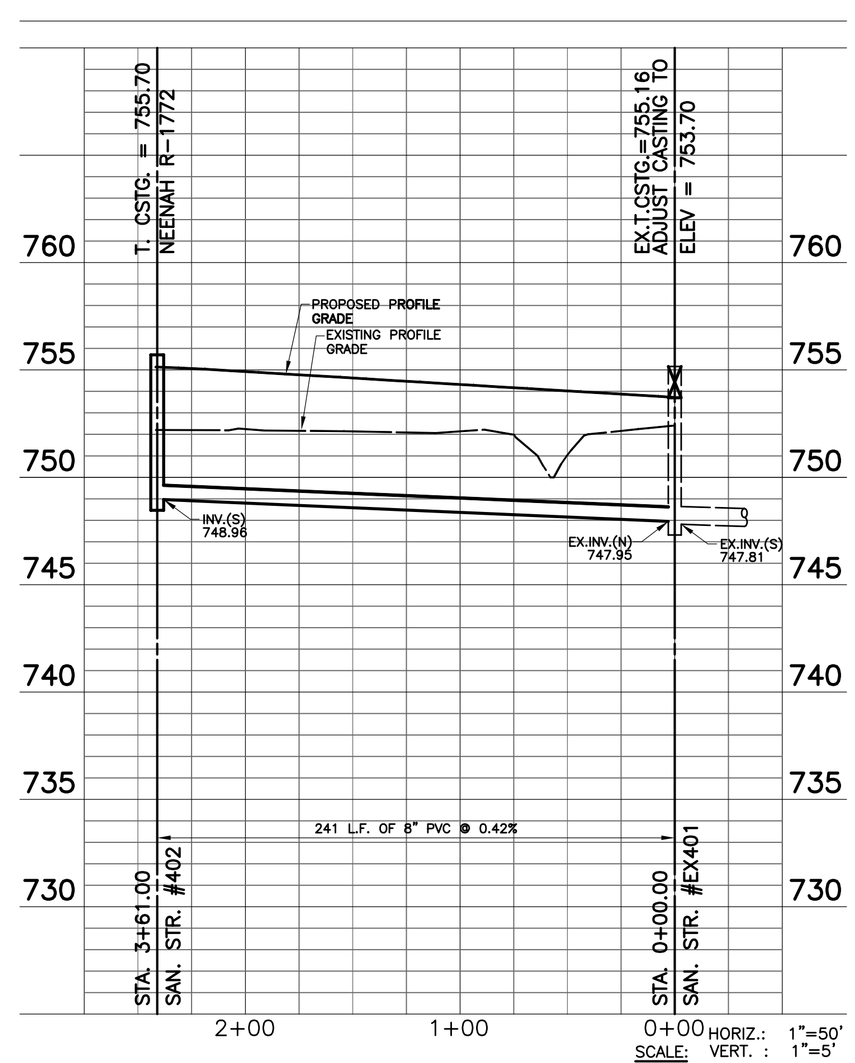

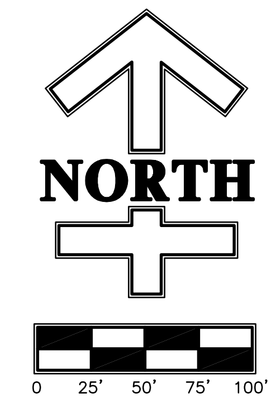

811
Know what's below.
Call before you dig.
"IT'S THE LAW"
CALL 2 WORKING DAYS BEFORE YOU DIG

THIS DRAWING/COMPUTER FILE IS THE PROPERTY OF PROJECTS PLUS ANY REPRODUCTION OR REUSE OF THIS DOCUMENT WITHOUT WRITTEN PERMISSION FROM PROJECTS PLUS IS PROHIBITED. ANY PERSON OR ENTITY USING THIS DOCUMENT FOR ANY PURPOSE OTHER THAN THE PROJECT FOR WHICH IT WAS ORIGINALLY INTENDED, WITH OR WITHOUT PERMISSION FROM PROJECTS PLUS, BY ITS USE AGREES TO INDEMNIFY AND HOLD HARMLESS PROJECTS PLUS FROM ANY LOSS, INCLUDING BUT NOT LIMITED TO ATTORNEY'S FEES, OCCURRING FROM THEIR USE.

SYMBOL	REVISION	DATE

SCALE: AS SHOWN
DRAWN: JPH
CHECKED: JKS
CERTIFIED: JKS

PROJECT
DEER MEADOWS – SECTION ONE
CITY OF FRANKLIN, JOHNSON COUNTY, INDIANA

TITLE
SANITARY SEWER PLAN AND PROFILE

PROJECTS plus
GREENWOOD SURVEYING COMPANY
CIVIL ENGINEERING – LAND SURVEYING
LAND PLANNING – CONSTRUCTION MANAGEMENT
2555 Fairview Place Suite A – Greenwood, Indiana 46142
(317)-882-5005

SEAL
JEFFERY K. SMITH
REGISTERED No. 19419 STATE OF INDIANA
PROFESSIONAL ENGINEER
11/12/15

JOB NUMBER
15015.01

SHEET
8A

OF 15 SHEETS

DATE
NOVEMBER 12, 2015

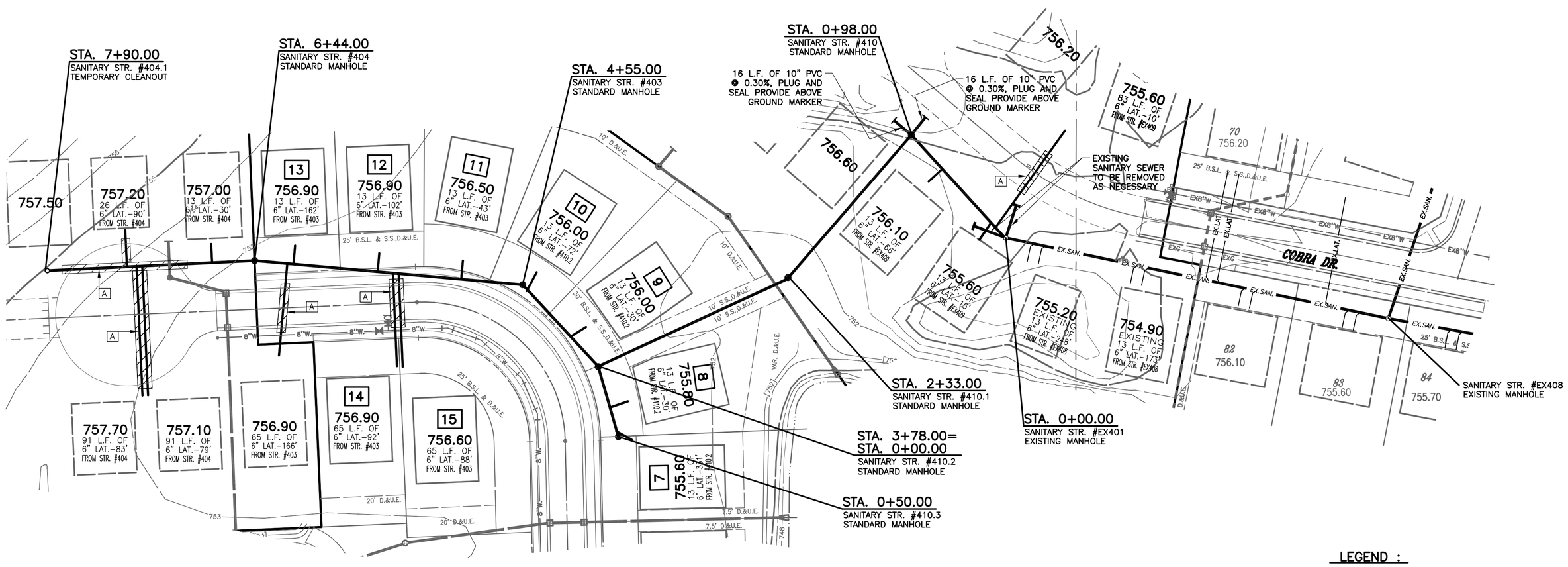

GENERAL NOTES

1. NONE OF THE SANITARY SEWER IN THIS PROJECT ARE TO BE CONSTRUCTED UNTIL THE LETTER OF APPROVAL FROM THE DEPARTMENT OF ENVIRONMENTAL MANAGEMENT HAS BEEN RECEIVED BY THE ENGINEER AND A COPY FORWARDED TO THE CONTRACTOR.
2. THE CONTRACTOR SHALL BE RESPONSIBLE FOR OBTAINING OR VERIFYING THAT ALL PERMITS AND APPROVALS ARE OBTAINED FROM THE RESPECTIVE CITY, COUNTY OR STATE AGENCIES PRIOR TO STARTING ANY CONSTRUCTION.
3. IT SHALL BE THE CONTRACTOR'S RESPONSIBILITY TO DETERMINE THE EXACT LOCATION OF ALL UTILITIES IN THE VICINITY OF THE CONSTRUCTION AREA PRIOR TO STARTING ANY CONSTRUCTION.
4. IT SHALL BE THE CONTRACTOR'S RESPONSIBILITY FOR NOTIFICATION AND COORDINATION OF ALL CONSTRUCTION WITH THE RESPECTIVE UTILITY COMPANIES PRIOR TO STARTING ANY CONSTRUCTION.
5. IF ALTERNATE STRUCTURES ARE TO BE SUPPLIED, SHOP DRAWINGS MUST BE SUBMITTED TO THE ENGINEER AND APPROVED IN WRITING PRIOR TO INSTALLATION.
6. SANITARY LATERALS SHALL BE LAID AT A GRADE NOT LESS THAN 1.00% TO A DEPTH AT THE PROPERTY LINE OF NOT LESS THAN 6.00 FEET
7. IT IS THE CONTRACTOR'S RESPONSIBILITY TO MAKE AVAILABLE TO THE BUILDER, DIMENSIONS TO LOCATE SEWER STUBS AND/OR ANY UTILITY CONDUIT STUBS INSTALLED.
8. ALL UTILITY CROSSINGS OR TRENCHES WITHIN (5) FEET OF THE EDGE OF OF PAVEMENT SHALL BE BACKFILLED TO THE SUBGRADE WITH GRANULAR MATERIAL (THE UPPERMOST 48" OF GRANULAR MATERIAL SHALL BE #53 STONE) AND COMPACTED IN SIX INCH LIFTS.
9. CONTRACTOR SHALL MAINTAIN A MINIMUM OF 18" VERTICAL BETWEEN WATER MAINS, SANITARY & STORM SEWERS, ALSO A MINIMUM OF 10' HORIZONTAL SEPARATION BETWEEN WATER MAINS & SANITARY SEWER
10. IT SHALL BE THE CONTRACTOR'S RESPONSIBILITY TO VERIFY THE EXACT LOCATION OF SEWER PIPE STUBS AND INVERTS. IF THE CONTRACTOR SHOULD FIND ANY DIFFERENCES THAN THE INFORMATION SHOWN ON THESE PLANS THE ENGINEER SHALL BE NOTIFIED.

NOTICES AND PERMITS

1. THE CONTRACTOR SHALL BE RESPONSIBLE FOR OBTAINING OR VERIFYING THAT ALL PERMITS AND APPROVALS ARE OBTAINED FROM THE RESPECTIVE CITY, COUNTY OR STATE AGENCIES PRIOR TO STARTING ANY CONSTRUCTION.
2. IT SHALL BE THE CONTRACTOR'S RESPONSIBILITY TO DETERMINE THE EXACT LOCATION OF ALL UTILITIES IN THE VICINITY OF THE CONSTRUCTION AREA PRIOR TO STARTING ANY CONSTRUCTION.
3. IT SHALL BE THE CONTRACTOR'S RESPONSIBILITY FOR NOTIFICATION AND COORDINATION OF ALL CONSTRUCTION WITH THE RESPECTIVE UTILITY COMPANIES PRIOR TO STARTING ANY CONSTRUCTION.

FOR EASEMENT LOCATIONS AND DESIGNATIONS SEE FINAL RECORD PLAT AND RESTRICTIONS

BENCHMARK: ELEV.=755.95

1. NORTH RIM ON MANHOLE NO. 8 IN DEER TRACE SUBDIVISION.

T.B.M. ELEV.=753.39

1. TOP OF EXISTING SANITARY MANHOLE AT CORNER OF LOT #29 IN DEER RUN SEC. 2.

LEGEND :

27	LOT NUMBER
754.50	PROPOSED EARTHEN PAD ELEVATION
	PROPOSED SANITARY SEWER W/ MANHOLE
	PROPOSED STORM SEWER W/ END SECTION, DITCH INLET AND CURB INLET
8"W	PROPOSED WATER LINE W/ VALVE AND FIRE HYDRANT AND ASSEMBLY
	PROPOSED 6" SERVICE LATERAL
65 L.F. OF 6"-LAT. 205' FROM STR. #414	PROPOSED LATERAL DATA
752	EXISTING CONTOUR LINE
S.S.,D.&U.E.	SANITARY SEWER, DRAINAGE AND UTILITY EASEMENT
D.&U.E.	DRAINAGE AND UTILITY EASEMENT
B.S.L.	BUILDING SETBACK LINE
	GRANULAR BACKFILL
A	GRANULAR BACKFILL REQUIRED

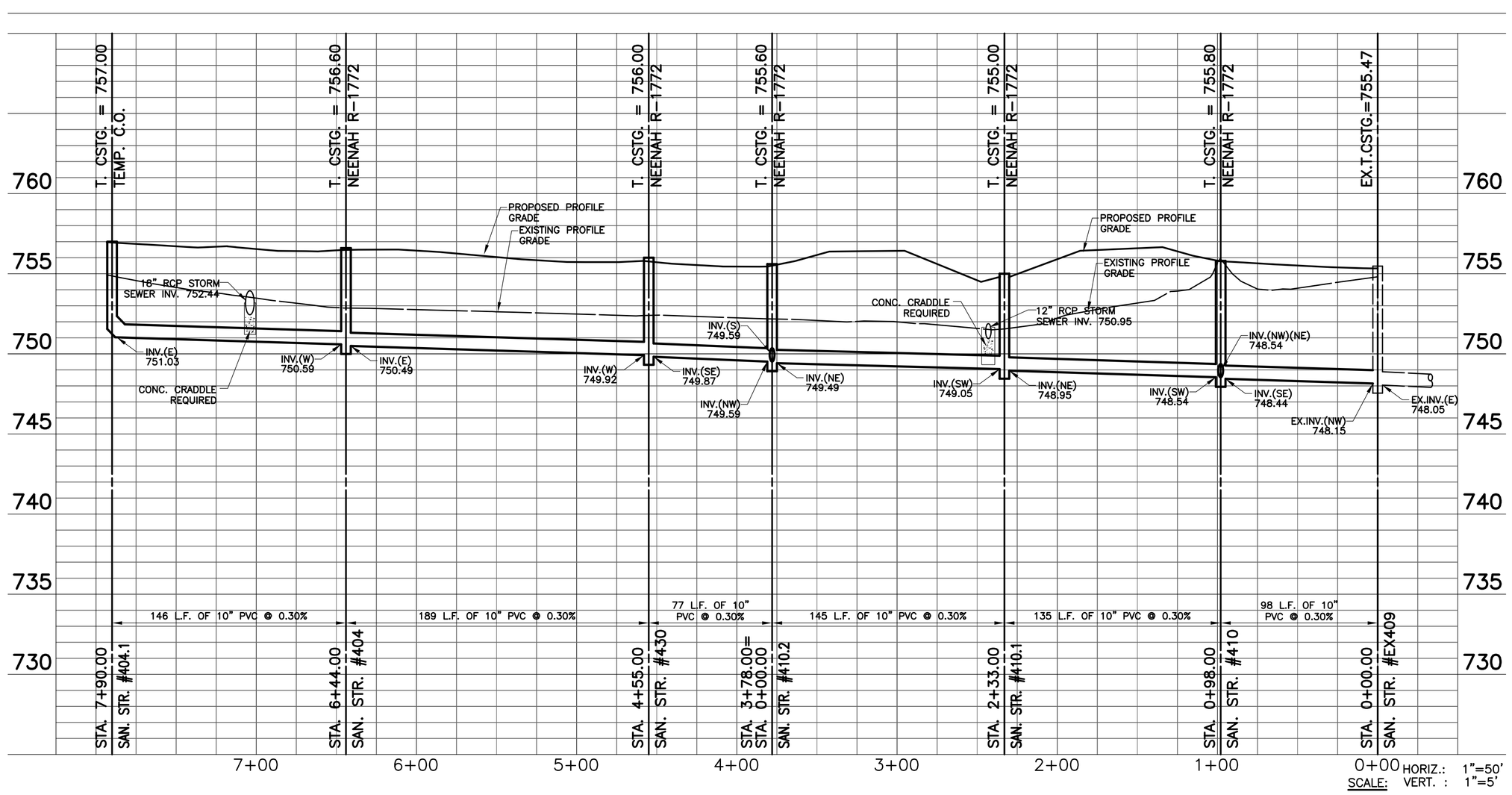

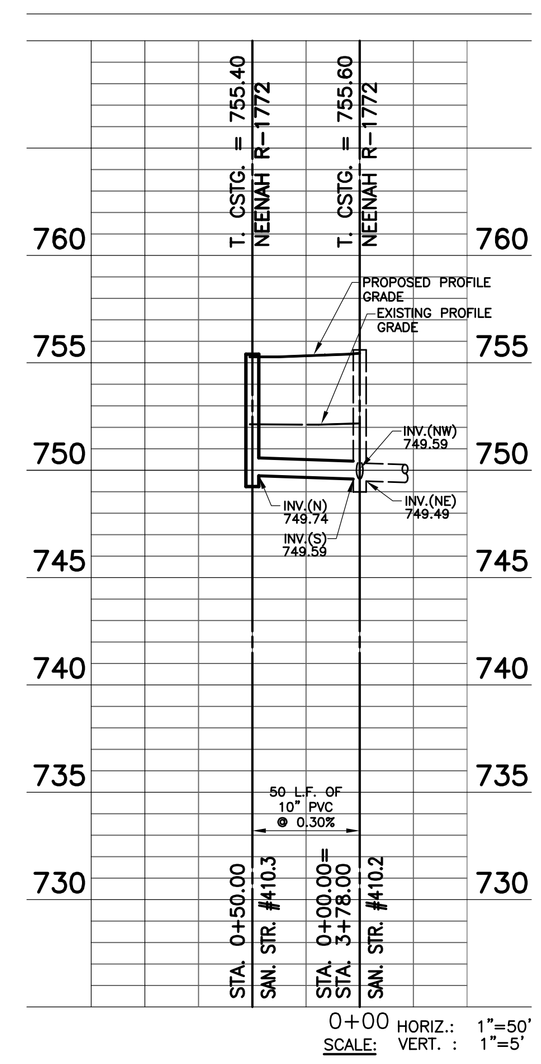

NORTH

0 25' 50' 75' 100'

811

Know what's below. Call before you dig.

"IT'S THE LAW"

CALL 2 WORKING DAYS BEFORE YOU DIG

THIS DRAWING/COMPUTER FILE IS THE PROPERTY OF PROJECTS PLUS ANY REPRODUCTION OR REUSE OF THIS DOCUMENT WITHOUT WRITTEN PERMISSION FROM PROJECTS PLUS IS PROHIBITED. ANY PERSON OR ENTITY USING THIS DOCUMENT FOR ANY PURPOSE OTHER THAN THE PROJECT FOR WHICH IT WAS ORIGINALLY INTENDED, WITH OR WITHOUT PERMISSION FROM PROJECTS PLUS, BY ITS USE AGREES TO INDEMNIFY AND HOLD HARMLESS PROJECTS PLUS FROM ANY LOSS, INCLUDING BUT NOT LMITED TO ATTORNEY'S FEES, OCCURING FROM THEIR USE.

SYMBOL	REVISION	DATE

SCALE: AS SHOWN
DRAWN: JPH
CHECKED: JKS
CERTIFIED: JKS

PROJECT
DEER MEADOWS – SECTION ONE
CITY OF FRANKLIN, JOHNSON COUNTY, INDIANA

TITLE
SANITARY SEWER PLAN AND PROFILE

PROJECTS plus
GREENWOOD SURVEYING COMPANY
CIVIL ENGINEERING – LAND SURVEYING
LAND PLANNING – CONSTRUCTION MANAGEMENT
2535 Fairview Place, Suite A – Greenwood, Indiana 46142
(317)-882-5003

SEAL
JEFFERY K. SMITH
REGISTERED
No. 19419
STATE OF INDIANA
PROFESSIONAL ENGINEER
11/12/15

JOB NUMBER
15015.01

SHEET
8B
OF 15 SHEETS

DATE
NOVEMBER 12, 2015

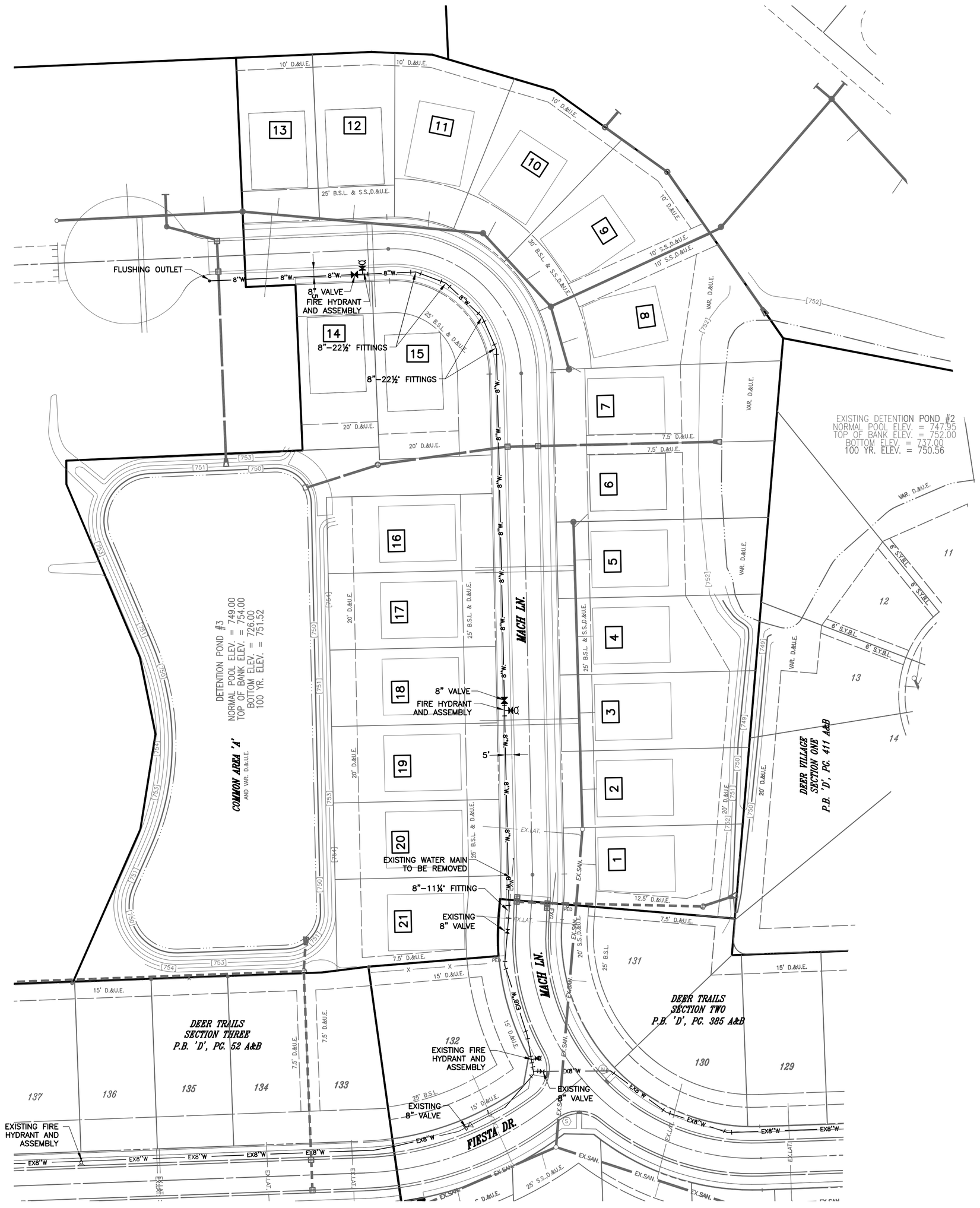

NOTICES AND PERMITS

1. THE CONTRACTOR SHALL BE RESPONSIBLE FOR OBTAINING OR VERIFYING THAT ALL PERMITS AND APPROVALS ARE OBTAINED FROM THE RESPECTIVE CITY, COUNTY OR STATE AGENCIES PRIOR TO STARTING ANY CONSTRUCTION.
2. IT SHALL BE THE CONTRACTOR'S RESPONSIBILITY TO DETERMINE THE EXACT LOCATION OF ALL UTILITIES IN THE VICINITY OF THE CONSTRUCTION AREA PRIOR TO STARTING ANY CONSTRUCTION.
3. IT SHALL BE THE CONTRACTOR'S RESPONSIBILITY FOR NOTIFICATION AND COORDINATION OF ALL CONSTRUCTION WITH THE RESPECTIVE UTILITY COMPANIES PRIOR TO STARTING ANY CONSTRUCTION.

NORTH

0 25' 50' 75' 100'

LEGEND :

27	LOT NUMBER
	PROPOSED SANITARY SEWER W/ MANHOLE
	PROPOSED STORM SEWER W/ END SECTION, DITCH INLET AND CURB INLET
8"W	PROPOSED WATER LINE W/ VALVE AND FIRE HYDRANT AND ASSEMBLY
EX.SAN.	EXISTING SANITARY SEWER W/ MANHOLE
	EXISTING STORM SEWER W/ END SECTION, DITCH INLET AND CURB INLET
EX.8"W	EXISTING WATER LINE W/ FIRE HYDRANT
EXG	EXISTING GAS LINE
S.S.,D.&U.E.	SANITARY SEWER, DRAINAGE AND UTILITY EASEMENT
D.&U.E.	DRAINAGE AND UTILITY EASEMENT
B.S.L.	BUILDING SETBACK LINE
	GRANULAR BACKFILL

TOTAL WATERLINE LENGTHS		
PIPE SIZE	PIPE MATERIAL	PIPE TOTAL
8" PVC	PVC C900 DR-14	700'
	TOTAL =	700'

BENCHMARK: ELEV.=755.95

1. NORTH RIM ON MANHOLE NO. 8 IN DEER TRACE SUBDIVISION.

T.B.M. ELEV.=753.39

1. TOP OF EXISTING SANITARY MANHOLE AT CORNER OF LOT #29 IN DEER RUN SEC. 2.

WATER NOTES:

1. ALL UTILITY CROSSINGS OR TRENCHES WITHIN (5) FEET OF THE EDGE OF PAVEMENT SHALL BE BACKFILLED TO THE SUBGRADE WITH GRANULAR MATERIAL (THE UPPERMOST 48" OF GRANULAR MATERIAL SHALL BE #53 STONE) AND COMPACTED IN SIX INCH LIFTS.
2. THE WATER AND SANITARY SEWER MAINS SHALL HAVE A MINIMUM HORIZONTAL SEPARATION OF 10 FEET AND CROSS AS AT AS NEAR 90° ANGLE AS POSSIBLE. MAINTAIN 18" VERTICAL SEPARATION FROM SANITARY AND STORM SEWER. IF THE REQUIRED SEPARATION CANNOT BE MET, USE THE APPROVED ALTERNATIVE TECHNICAL STANDARD.
3. IT SHALL BE THE CONTRACTOR'S RESPONSIBILITY TO VERIFY THE EXACT LOCATION OF EXISTING WATER MAINS AND FLUSHING OUTLETS. IF THE CONTRACTOR SHOULD FIND ANY DIFFERENCE THAN THE INFORMATION SHOWN ON THESE PLANS THE ENGINEER MUST BE NOTIFIED.
4. PRIOR TO ISSUANCE OF ANY BUILDING PERMITS THE AGGREGATE BASE LAYERS FOR ALL STREETS, DRIVES AND PARKING LOTS AND ALL WATER MAINS AND HYDRANTS FOR THE SITE DEVELOPMENT MUST BE INSTALLED PER APPROVED SPECIFICATIONS AND MADE SERVICEABLE.
5. PUBLIC FIRE HYDRANTS AND WATER MAINS SHALL BE INSTALLED PER INDIANA AMERICAN WATER COMPANY REQUIREMENTS AND SPECIFICATIONS. FOR REQUIRED INSPECTIONS CONTACT INDIANA AMERICAN WATER COMPANY @ 317-881-0270
6. PRIVATE FIRE HYDRANTS AND WATER MAINS SHALL BE INSTALLED PER NFPA 24 (PRIVATE FIRE SERVICE MAINS AND THEIR APPURTENANCES) AND INDIANA AMERICAN WATER COMPANY REQUIREMENTS AND SPECIFICATIONS. FOR REQUIRED INSPECTIONS CONTACT FRANKLIN FIRE DEPARTMENT, CODE ENFORCEMENT DIVISION. 24 HOURS PRIOR TO INSPECTION.
7. REQUIRED JOINT RESTRAINT AT ALL VALVES, FITTINGS AND DEAD ENDS. WHEN RESTRAINED JOINTS ARE REQUIRED FOR PIPE-TO-PIPE CONNECTIONS THEY SHALL BE CERTA-LOK JOINTS BY CERTAINTEED OR OTHER MECHANICAL RESTRAINT DEVICES DESCRIBED IN SPECIFICATION SECTION 15131.
8. FIRE HYDRANTS SHALL BE BAGGED WHEN INSTALLED, UNTIL HYDRANT IS PLACED IN SERVICE.
9. WATER MAINS MAY NOT BE INSTALLED UNDER SIDEWALKS, WALKWAYS, LANDSCAPING OR MOUNDING.
10. AFTER-MARKET/ADD-ON JOINT RESTRAINT - MECHANICAL JOINT AND PIPE BELL RESTRAINT DEVICES SHALL UTILIZE NON-POINT LOADING RESTRAINING GLANDS WHICH MAINTAIN JOINT FLEXIBILITY. THE MINIMUM PRESSURE RATING SHALL BE 150 PSI FOR SUCH DEVICES.
11. USE BENDS AND FITTINGS AS REQUIRED. JOINT DEFLECTION IS NOT PERMITTED FOR PVC PIPE. BENDS SHALL BE CLEARLY INDICATED ON SUBMITTED AS-BUILT
12. USE REQUIRED THRUST BLOCK AT ALL BENDS AND FITTINGS. JOINT RESTRAINT IS NOT PERMITTED FOR PVC PIPE
13. DUCTILE IRON FITTINGS ARE REQUIRED AND SHALL USE CORROSION RESISTANT, BLUE-FLUOR COATED T- BOLTS AND SHALL BE WRAPPED IN POLYETHYLENE ENCASEMENT.
14. FOR RESTRAINT, THRUST BLOCKS OR MEGA LUGS AT FITTINGS AND BELL RESTRAINT JOINTS (STAINLESS STEEL ONLY) AT PIPE LENGTHS SHALL BE USED.

811
Know what's below.
Call before you dig.
"IT'S THE LAW"
CALL 2 WORKING DAYS BEFORE YOU DIG

THIS DRAWING/COMPUTER FILE IS THE PROPERTY OF PROJECTS PLUS ANY REPRODUCTION OR REUSE OF THIS DOCUMENT WITHOUT WRITTEN PERMISSION FROM PROJECTS PLUS IS PROHIBITED. ANY PERSON OR ENTITY USING THIS DOCUMENT FOR ANY PURPOSE OTHER THAN THE PROJECT FOR WHICH IT WAS ORIGINALLY INTENDED, WITH OR WITHOUT PERMISSION FROM PROJECTS PLUS, BY ITS USE AGREES TO INDEMNIFY AND HOLD HARMLESS PROJECTS PLUS FROM ANY LOSS, INCLUDING BUT NOT LIMITED TO ATTORNEY'S FEES, OCCURRING FROM THEIR USE.

SYMBOL	REVISION	DATE

SCALE 1"=50'
DRAWN JPH
CHECKED JKS
CERTIFIED JKS

PROJECT
DEER MEADOWS - SECTION ONE
CITY OF FRANKLIN, JOHNSON COUNTY, INDIANA

TITLE
WATER DISTRIBUTION PLAN

PROJECTS plus
GREENWOOD SURVEYING COMPANY
CIVIL ENGINEERING - LAND SURVEYING
LAND PLANNING - CONSTRUCTION MANAGEMENT
2555 Fairview Place Suite A - Greenwood, Indiana 46142
(317)-882-5003

SEAL
JEFFERY K. SMITH
REGISTERED
No. 19419
STATE OF INDIANA
PROFESSIONAL ENGINEER
11/12/15

JOB NUMBER
15015.01

SHEET
9
OF 15 SHEETS

DATE
NOVEMBER 12, 2015

STOP SIGNS INSTALLED A MIN. OF 2' FROM CURB, AND MIN. OF 7' FROM TOP OF CURB TO BOTTOM OF SIGN.

STOP SIGN
R1–1
30"x30"

SPEED LIMIT
R2–1
24"x30"

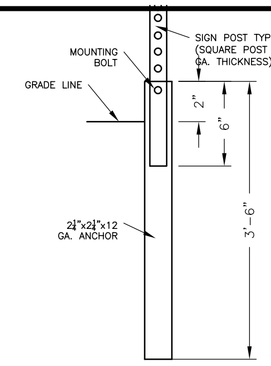

NOTES:
1) SQUARE POST SHALL BE A BE 12 GA. THICKNESS AND MEET INDOT STANDARD SPECIFICATIONS

UNREINFORCED ANCHOR BASE AND POST

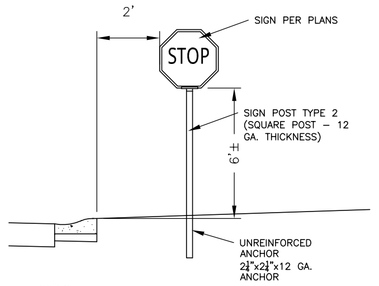

NOTES:
1) SIGN PLACEMENT SHALL MEET INDOT STANDARD SPECIFICATIONS
2) SQUARE POST SHALL BE A BE 12 GA. THICKNESS AND MEET INDOT STANDARD SPECIFICATIONS
3) ALL SIGN SIZES, SHAPES, COLORS, AND MATERIAL SHALL MEET THE INDIANA MANUAL ON UNIFORM TRAFFIC CONTROL DEVICES.

TYPICAL SUBDIVISION REGULATORY SIGNS

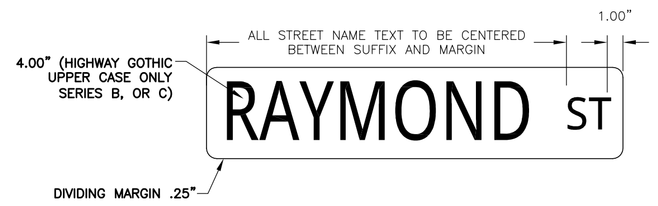

RESIDENTIAL

WHITE HIGH REFLECTIVE LETTERS ON A HIGH REFLECTIVE BACKGROUND.

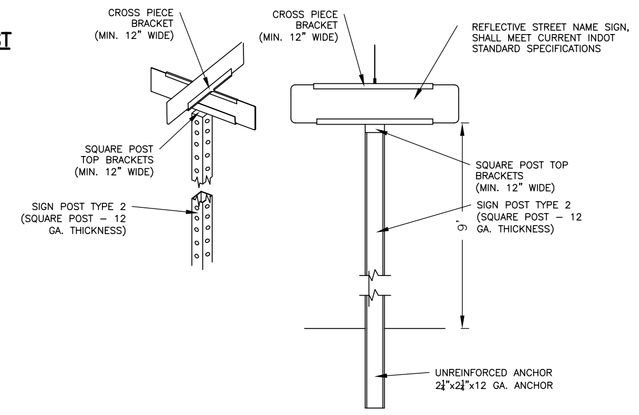

STREET NAME SIGN DETAIL

BACKFILL REQUIREMENT FOR RESIDENTIAL STREETS ONLY

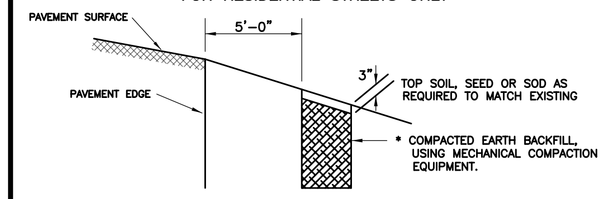

TYPICAL SECTION

GRANULAR BACKFILL WILL NOTBE REQUIRED WHEN ENTIRE TRENCH AREA IS 5'–0" OR MORE BEYOND THE EDGE OF ROADWAY SURFACE.

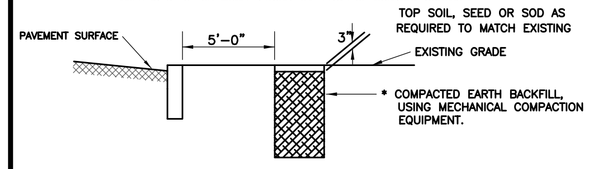

STANDARD FULL DEPTH GRANULAR BACKFILL DETAILS

TYPICAL SECTION, CURB & GUTTER STREETS

GRANULAR BACKFILL WILL NOT BE REQUIRED WHEN ENTIRE TRENCH ARE IS 5'–0" OR MORE BEYOND THE BACK EDGE OF THE EXISTING CURB.

ALL EXCAVATED AREA UNDER PAVED ROADWAYS, OR WITHIN 5'–0" OF THE PAVEMENT EDGE, OR BACK OF CURB SHALL BE BACKFILLED WITH GRANULAR MATERIAL TO WITHIN 3 INCHES OF THE TOP OF THE TRENCH (OR TO FINAL GRADE UNDER PAVEMENT). THIS GRANULAR BACKFILL SHALL BE PLACED IN 12 INCH LIFTS AND EACH LAYER SHALL BE COMPACTED BY MECHANICAL MEANS TO AT LEAST 95% OF ITS MAXIMUM DRY DENSITY.

HOWEVER, GRANULAR BACKFILL MAY BE PLACED IN 24 INCH LIFTS PROVIDED EACH LAYER IS COMPACTED BY A COMBINATION OF SATURATION AND MECHANICAL MEANS TO AT LEAST 95% OF ITS MAXIMUM DENSITY.

IF ANY PORTION OF THE TRENCH AREA IS NEARER THAN 5'–0" FROM THE EDGE OF THE ROADWAY SURFACE, THE ENTIRE TRENCH MUST BE BACKFILLED WITH GRANULAR MATERIAL.

* THIS COMPACTION PROCEDURE IS NOT REQUIRED FOR UNIMPROVED AREA OR WHERE PROBLEMS RELATED TO TRENCH SETTLEMENT IS NEGLIGIBLE.

ALL SEEDING AND SODDING SHALL CONFORM TO THE LATEST EDITION OF THE ISHC STANDARD SPECIFICATIONS.

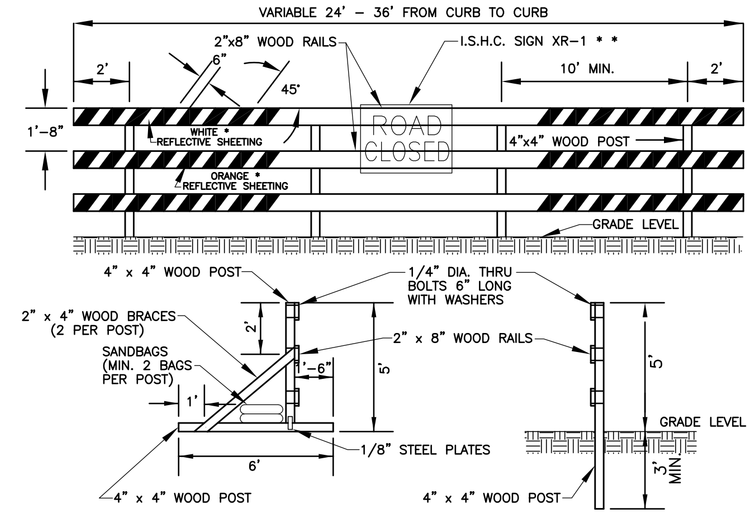

GENERAL NOTES:

1. ALL WOOD POSTS AND SUPPORT MEMBERS SHALL BE PAINTED WITH TWO (2) COATS OF WHITE PAINT.
2. LOCATION OF BARRICADE AS PER PLANS.
3. * REFLECTIVE SHEETING TO BE IN ACCORDANCE WITH I.S.H.C. STANDARD SPECIFICATIONS 912.10.
4. * SEE I.S.H.C. STANDARD DETOUR SIGNS SHT. 3.
5. REFER TO SECTION 800 OF THE INDIANA STATE HIGHWAY COMMISSIONS STANDARD SPECIFICATIONS AND LATEST ADDITION OF INDIANA MANUAL FOR UNIFORM TRAFFIC CONTROL, DEVICES.

STANDARD BARRICADE DETAILS 22–07

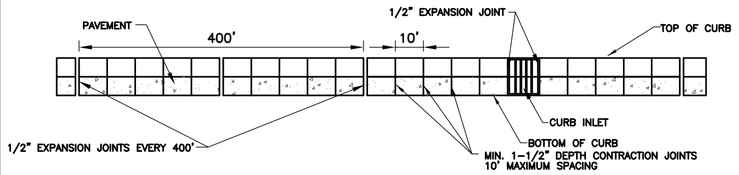

CURB JOINTS

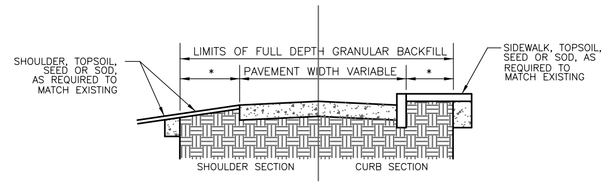

* GRANULAR BACKFILL:
ALL CUTS MADE IN OR UNDER ANY ROAD SURFACE SHALL BE BACKFILLED WITH GRANULAR MATERIAL. WHERE A CUT EITHER TRANSVERSES OR PARALLELS THE ROAD SURFACE, GRANULAR BACKFILL SHALL BE PLACED IN THAT PORTION OF THE CUT LOCATED WITHIN THREE (3) FEET OF THE ROAD SURFACE OR WITHIN A DISTANCE OF EQUAL TO ONE–HALF (1/2) THE DEPTH OF THE CUT, WHICH–EVER IS GREATER.

MATERIAL PLACEMENT AND COMPACTION SHALL CONFORM TO GENERAL ORDINANCE NO. 24, 1985, SECTION 28–328.

CURB JOINT DETAIL

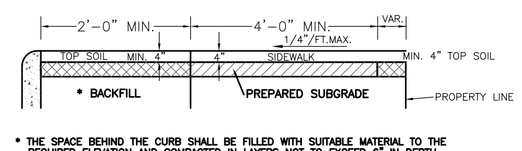

* THE SPACE BEHIND THE CURB SHALL BE FILLED WITH SUITABLE MATERIAL TO THE REQUIRED ELEVATION AND COMPACTED IN LAYERS NOT TO EXCEED 8" IN DEPTH.

SUBGRADE UNDER ALL CURB, SIDEWALK, AND DRIVES SHALL BE COMPACTED IN ACCORDANCE WITH SECTION 207.02 OF THE STANDARD SPECIFICATIONS.

TYPICAL SIDEWALK SECTION

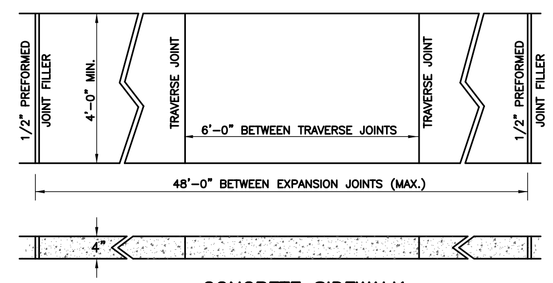

CONCRETE SIDEWALK

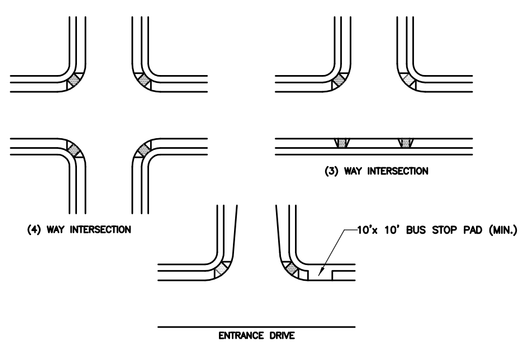

LOCATION OF CURB RAMPS

CURB RAMPS NOTES

CURB RAMPS FOR THE DISABLED SHALL BE REQUIRED WITHIN THE PUBLIC RIGHT–OF–WAY AND SHALL CONFORM WITH CURRENT SPECIFICATIONS ESTABLISHED BY THE AMERICAN DISABILITIES ACT (ADA), SECTION (4.7) "CURB RAMPS".

THE CURB RAMP SHALL BE FLUSH AND FREE OF ABRUPT CHANGES WITH SIDEWALKS, GUTTERS OR STREETS, AND PROVIDE A MAXIMUM SLOPE OF 1:12.

THE MINIMUM WIDTH OF A CURB RAMP SHALL BE (36) INCHES EXCLUSIVE OF FLARED SIDES.

SIDES OF CURB RAMPS SHALL HAVE FLARED SIDES. THE MAXIMUM SLOPE OF THE FLARE SHALL BE 1:10.

THE ABOVE CRITERIA IS PROVIDED TO ESTABLISH BASIC CURB RAMP SPECIFICATIONS. ADDITIONAL SPECIFICATIONS EXIST TO COVER SPECIFIC SITUATIONS FOR CURB RAMP CONFIGURATIONS. THE INDIANAPOLIS DOT DOES NOT INTEND OR INTER TO WAIVE ANY OF THE REQUIREMENTS ESTABLISHED UNDER ADA.

GENERAL NOTES:

1. WHEN THE INTERSECTION IS NOT SIGNALIZED, SIDEWALK RAMPS SHALL BE PLACED ON THE RESIDENTIAL STREET SIDE ONLY. WHEN INTERSECTION IS SIGNALIZED, SIDEWALK RAMPS SHALL BE PLACED ON BOTH RESIDENTIAL STREET AND ARTERIAL STREET SIDE.

2. CURB CUT RAMPS ARE TO BE LOCATED AS SHOWN ON THE PLANS OR AS DIRECTED.

3. RAMPS SHALL BE PROVIDED AT ALL CORNERS OF STREET INTERSECTIONS WHERE THERE IS EXISTING OR PROPOSED SIDEWALK AND CURB. RAMPS SHALL ALSO BE PROVIDED AT WALK LOCATIONS IN MID–BLOCK IN THE VICINITIES OF HOSPITALS, MEDICAL CENTERS, AND ATHLETIC STADIUMS.

4. SURFACE TEXTURE OF THE RAMP SHALL BE THAT OBTAINED BY A COURSE BROOMING, TRANSVERSE TO THE SLOPE OF THE RAMP.

5. SIDEWALKS SHALL BE RAMPED WHERE THE DRIVEWAY CURB IS EXTENDED ACROSS THE WALK.

6. CARE SHALL BE TAKEN TO ASSURE A UNIFORM GRADE ON ALL RAMPS WITH NO BREAKS IN GRADE.

7. DRAINAGE STRUCTURES SHALL NOT BE PLACED IN LINE WITH RAMPS. EXCEPT WHERE EXISTING DRAINAGE STRUCTURES ARE BEING UTILIZED IN THE NEW CONSTRUCTION, LOCATION OF THE RAMP SHOULD TAKE PRECEDENCE OVER LOCATION OF DRAINAGE STRUCTURE.

8. THE NORMAL GUTTER LINE PROFILE SHALL BE MAINTAINED THROUGH THE AREA OF THE RAMP.

9. EXPANSION JOINT FOR THE RAMP SHALL BE A MAXIMUM 1/2" WIDE. THE TOP OF THE JOINT FILLER FOR RAMP TYPES SHALL BE FLUSH WITH ADJACENT CONCRETE.

10. CROSSWALK AND STOP LINE MARKINGS, IF USED, SHALL BE SO LOCATED AS TO STOP TRAFFIC SHORT OF RAMP CROSSINGS.

11. SLOPE OF RAMP MAY BE MODIFIED WHEN FIELD CONDITIONS WARRANT AND WHEN APPROVED BY THE DEPARTMENT OF TRANSPORTATION.

GENERAL NOTES FOR CURB AND GUTTER

WHERE SIDEWALK IS CONSTRUCTED IMMEDIATELY ADJACENT TO CURB, THE SURFACE OF THE SIDEWALK SHALL BE CONSTRUCTED 1/2" HIGHER THAN THE TOP OF THE CURB.

TRANSVERSE JOINTS SHALL BE CUT WITH A JOINTER HAVING A RADIUS OF 1/4" OF SPACING AS INDICATED OR DIRECTED.

COST OF TRANSVERSE PREFORMED JOINT FILLER TO BE INCLUDED IN CONTRACT PRICE FOR "CONCRETE SIDEWALK".

* COMPACTED SUBGRADE – THE UPPER 6 INCHES SHALL COMPLY WITH THE DENSITY REQUIREMENTS OF THE CONTRACT IMMEDIATELY PRIOR TO PLACING THE MATERIAL THEREON. ALL SOFT YIELDING OR OTHER UNSUITABLE MATERIAL, WHICH CANNOT BE COMPACTED SATISFACTORILY, SHALL BE REMOVED. ALL ROCK ENCOUNTERED SHALL BE REMOVED OR BROKEN OFF AT LEAST SIX (6) INCHES BELOW THE SUBGRADE SURFACE. ANY HOLES OR DEPRESSIONS RESULTING FROM THE REMOVAL OF THE UNSUITABLE MATERIAL, SHALL BE FILLED WITH SATISFACTORY MATERIAL AND COMPACTED TO CONFORM WITH THE SURROUNDING SUBGRADE SURFACE.

** WHERE SIDEWALK IS CONSTRUCTED ADJACENT TO CURB, THE SPACE BEHIND THE NEW CURB SHALL BE FILLED WITH GRANULAR MATERIAL TO THE REQUIRED ELEVATION AND COMPACTED IN LAYERS NOT TO EXCEED 4".

*** WHERE SIDEWALK IS NOT CONSTRUCTED ADJACENT TO THE CURB, THE SPACE BEHIND THE CURB SHALL BE FILLED WITH SUITABLE MATERIAL TO THE REQUIRED ELEVATION AND COMPACTED IN LAYERS NOT TO EXCEED 4"

**** WHEN BUILT IN CONJUNCTION WITH CONCRETE PAVEMENT EXPANSION AND CONTRACTION JOINTS SHOULD BE PLACED AT THE SAME LOCATIONS AS IN THE PAVEMENT SLAB. THE CURB AND GUTTER SHOULD BE TIED TO THE PAVEMENT BY 1/2" ROUND DEFORMED BARS AT ABOUT 3 FOOT INTERVALS. IF NO CONCRETE PAVEMENT IS BEING BUILT, AT THE TIME, THE CURB IS CONSTRUCTED. EXPANSION JOINTS SHOULD BE PLACED AT THE ENDS OF ALL RETURNS AND AT INTERVALS NOT TO EXCEED 100 FEET. CONTRACTION JOINTS SHOULD BE INSTALLED AT 10 FOOT SPACING.

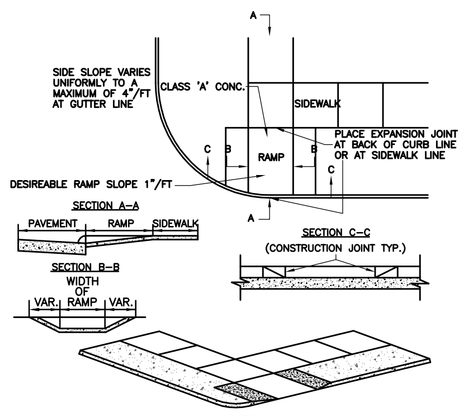

SIDEWALK RAMP FOR HANDICAP ACCESS TYPE I

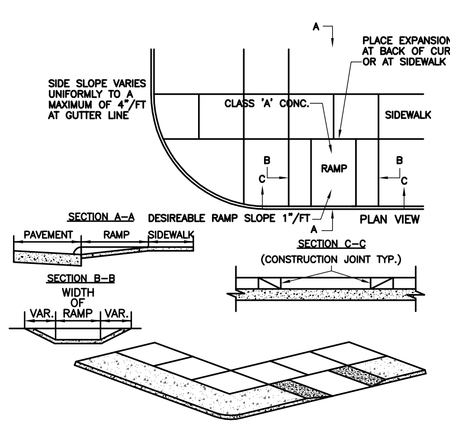

SIDEWALK RAMP FOR HANDICAP ACCESS TYPE II

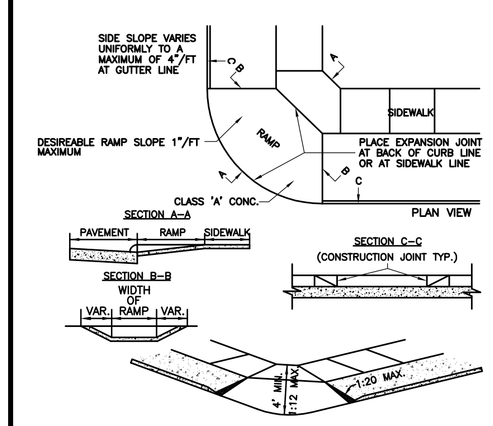

SIDEWALK RAMP FOR HANDICAP ACCESS TYPE III

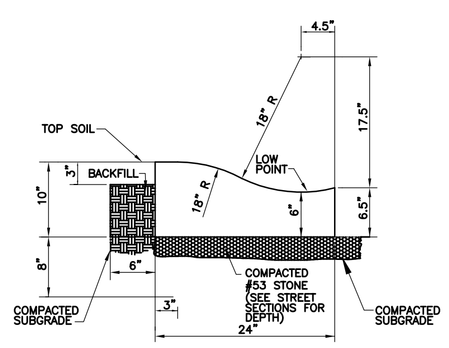

CONCRETE ROLL CURB AND GUTTER (TYPE I)

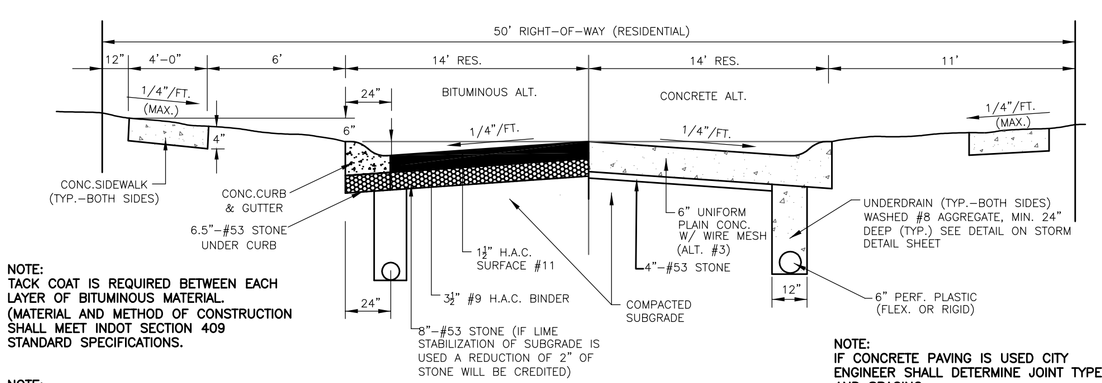

NOTE:
TACK COAT IS REQUIRED BETWEEN EACH LAYER OF BITUMINOUS MATERIAL. (MATERIAL AND METHOD OF CONSTRUCTION SHALL MEET INDOT SECTION 409 STANDARD SPECIFICATIONS.

NOTE:
ALL SUBGRADE AND STONE BASE MUST PASS A PROOF ROLL TEST AS REQUIRED BY CITY ENGINEER

NOTE:
IF CONCRETE PAVING IS USED CITY ENGINEER SHALL DETERMINE JOINT TYPES AND SPACING

TYPICAL LOCAL STREET SECTION

SYMBOL	REVISION	DATE

SCALE: NONE
DRAWN: JPH
CHECKED: JKS
CERTIFIED: JKS

PROJECT: DEER MEADOWS – SECTION ONE
CITY OF FRANKLIN, JOHNSON COUNTY, INDIANA

TITLE: STREET DETAILS

PROJECTS plus
GREENWOOD SURVEYING COMPANY
CIVIL ENGINEERING – LAND PLANNING – CONSTRUCTION MANAGEMENT – SURVEYING
2555 Fairview Place Suite A, Greenwood, Indiana 46142
(317)–882–5003

SEAL
JEFFERY K. SMITH
REGISTERED
No. 19419
STATE OF INDIANA
PROFESSIONAL ENGINEER
11/12/15

JOB NUMBER: 15015.01

SHEET 10 OF 15 SHEETS

DATE: NOVEMBER 12, 2015

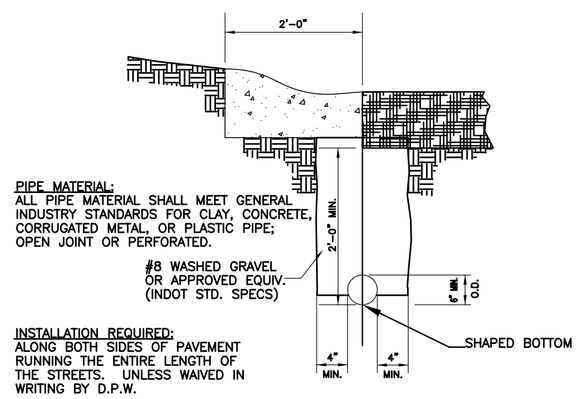

PIPE MATERIAL:
ALL PIPE MATERIAL SHALL MEET GENERAL INDUSTRY STANDARDS FOR CLAY, CONCRETE, CORRUGATED METAL, OR PLASTIC PIPE; OPEN JOINT OR PERFORATED.

#8 WASHED GRAVEL OR APPROVED EQUIV. (INDOT STD. SPECS)

INSTALLATION REQUIRED:
ALONG BOTH SIDES OF PAVEMENT RUNNING THE ENTIRE LENGTH OF THE STREETS. UNLESS WAIVED IN WRITING BY D.P.W.

CURB UNDERDRAIN DETAIL

(TYPICAL INSTALLATION)

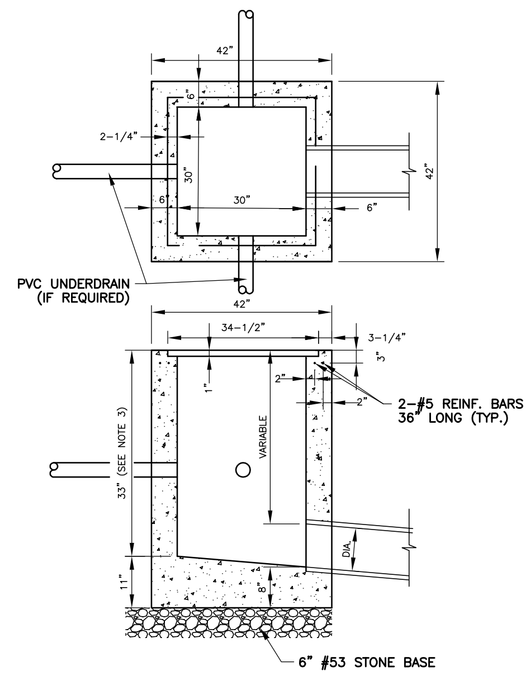

1. IN ACCORDANCE WITH INDIANA STATE HIGHWAY SPECIFICATIONS.
2. MINIMUM CONCRETE COMPRESSIVE STRENGTH 4000 P.S.I.
3. IN/DOT DIMENSIONS. OTHER DIMENSION AVAILABLE
4. PRECAST ADJUSTING SECTIONS AVAILABLE.

INLET TYPE "E"

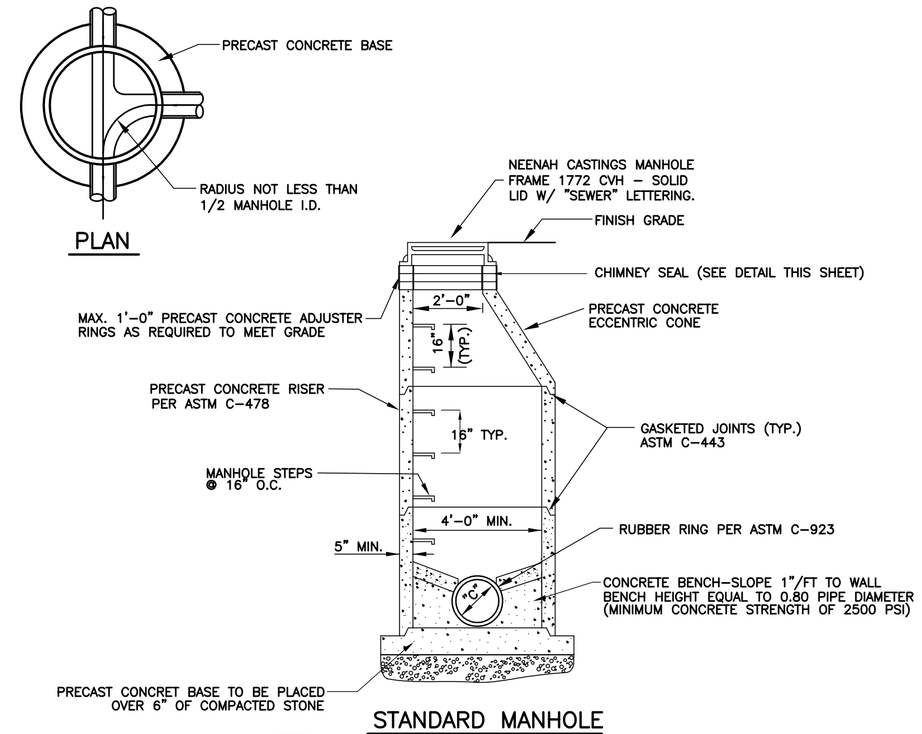

STANDARD MANHOLE

NOTE:

1. FOR ALL MANHOLES 6'-0" OR LESS IN DEPTH– PROVIDE RISER WITH FLAT TOP IN LIEU OF ECCENTRIC CONE IN ACCORDANCE WITH ASTM C-478.
2. THE CROWN OF THE INFLUENT PIPE SHALL BE AT OR ABOVE THE CROWN OF THE OUTLET PIPE.
3. DROP MANHOLES SHALL BE USED WHENEVER THE DISTANCE FROM THE INVERT OF THE INCOMING LINE AND THE BOTTOM OF THE MANHOLE IS GREATER THAN TWO FEET.

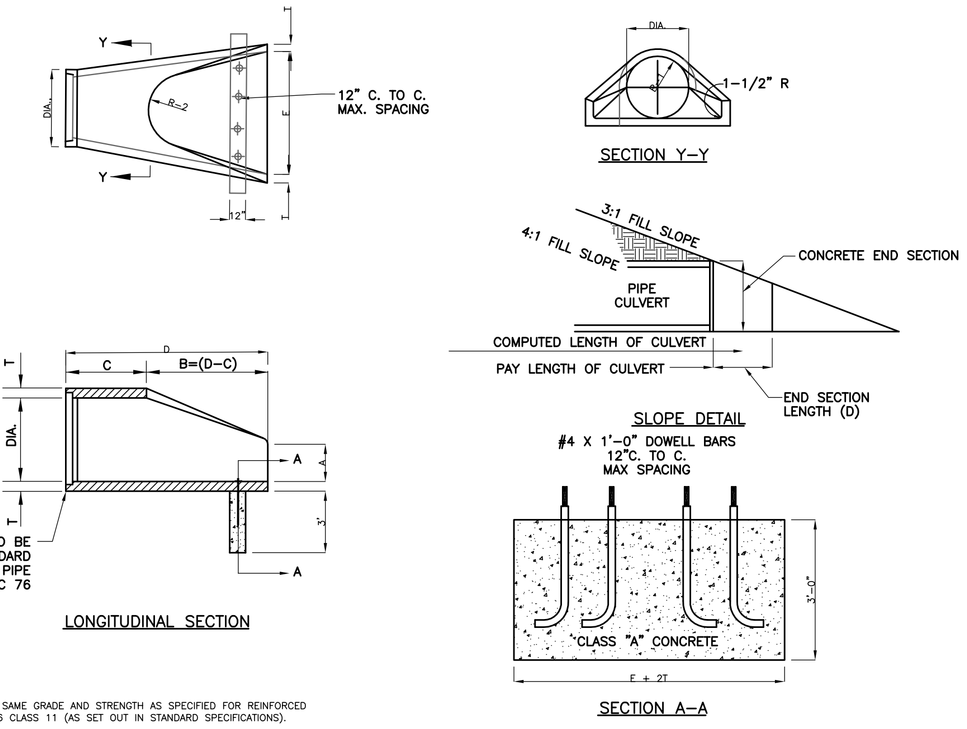

NOTES:

CONCRETE IN THIS SECTION SHALL BE THE SAME GRADE AND STRENGTH AS SPECIFIED FOR REINFORCED CONCRETE PIPE, A.S.T.M. DESIGNATION C-76 CLASS 11 (AS SET OUT IN STANDARD SPECIFICATIONS).

REINFORCEMENT IN THE "C" PORTION SHALL BE THE SAME AS SPECIFIED FOR THE REINFORCED CONCRETE, A.S.T.M. DESIGNATION C-76 CLASS II FOR THE SIZE OF CONNECTION PIPE.

REINFORCEMENT IN THE "B" PORTION SHALL HAVE A CROSS SECTIONAL AREA EQUAL TO THAT OF ONE LAYER OF STEEL IN THE "C" PORTION.

THE END OF THE PIPE CULVERT SHALL BE PLACED IN THE CONCRETE END SECTION SO THAT THE FLOW LINES ARE FLUSH. THE JOINT SHALL BE COMPLETELY FILLED WITH MORTAR.

IN 3:1 OR 4:1 FILL SLOPE, CHANGE TO THE SLOPE OF THE END SECTION IN A SMOOTH, PLEASING TRANSITION APPROXIMATELY 10'-0" IN LENGTH.

VARIATION IN DIMENSIONS – THE THICKNESS OF THE CONCRETE, THE POSITIONS OF STEEL, AND THE INTERNAL DIAMETER OF THE PIPE SHALL CONFORM WITH THE VARIATIONS IN DIMENSIONS AS PROVIDED IN THE SPECIFICATIONS FOR REINFORCED CONCRETE CULVERT, STORM DRAIN, AND SEWER PIPE, A.S.T.M. DESIGNATION C-76

CONCRETE PIPE TOE ANCHORS SHALL BE REQUIRED ON ALL CONCRETE PIPE END SECTIONS.

PRECAST CONCRETE END SECTION

DIA.	WALL	WT. SEC.	A	B	C	D	E	R-1	R-2	SKIRT
12	2	530	4	24	48 7/8	72 7/8	24	10 1/16	9	3 1/2
15	2 1/4	740	6	27	46	73	30	12 1/2	11	3 1/2
18	2 1/2	990	9	27	46	73	36	15 1/2	12	4
21	2 3/4	1280	9	35	38	73	42	16 1/8	13	4
24	3	1530	9 1/2	43 1/2	30	73 1/2	48	16 11/16	14	4 1/2
27	3 1/4	1930	10 1/2	48	25 1/2	73 1/2	54	17 3/4	14 1/2	4 1/2
30	3 1/2	2190	12	54	19 3/4	73 3/4	60	18 5/16	15	5
33	3 3/4	3150	13 1/2	58 1/2	39 1/4	97 3/4	66	23 3/4	17 1/2	5 1/2
36	4	4100	15	63	34 3/4	97 3/4	72	24 1/16	20	5 1/2

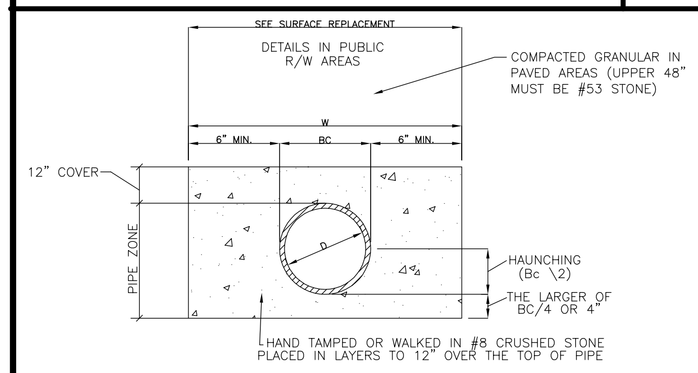

W = MAXIMUM ALLOWABLE TRENCH WIDTH FOR PIPE ASTM
NOT TO EXCEED FOUR (4) FEET OR 6" THROUGH 24" PIPE
NOR SIX (6) FEET FOR 27" THROUGH 48" PIPE
D = PIPE DIAMETER (INTERNAL)
Bc= PIPE DIAMETER (EXTERNAL)

NOTES

1. BEDDING STOPS AT A POINT 12" ABOVE THE TOP OF THE PIPE. BACKFILLING ABOVE THIS POINT SHALL BE IN ACCORDANCE WITH THE SPECIFICATIONS.
2. WORK FALLING UNDER JURISDICTION OF THE INDIANA STATE HIGHWAY COMMISSION SHALL UTILIZE COMPACTED GRANULAR BACKFILL MATERIAL FOR INITIAL AND FINAL BACKFILL ANYWHERE WITHIN 12 FEET OF THE EDGE OF PAVEMENT. OTHERWISE, COMPACTED GRANULAR BACKFILL MATERIAL SHALL ONLY BE USED UNDER PAVEMENT SURFACES OR OTHER SPECIFICALLY DESIGNATED AREAS.

FIRST CLASS PIPE LAYING METHOD FOR: 1) FLEXIBLE (PVC, RPVC, ABS & HDPE PIPE) AND 2) DUCTILE IRON WITHIN PVM'T LIMITS

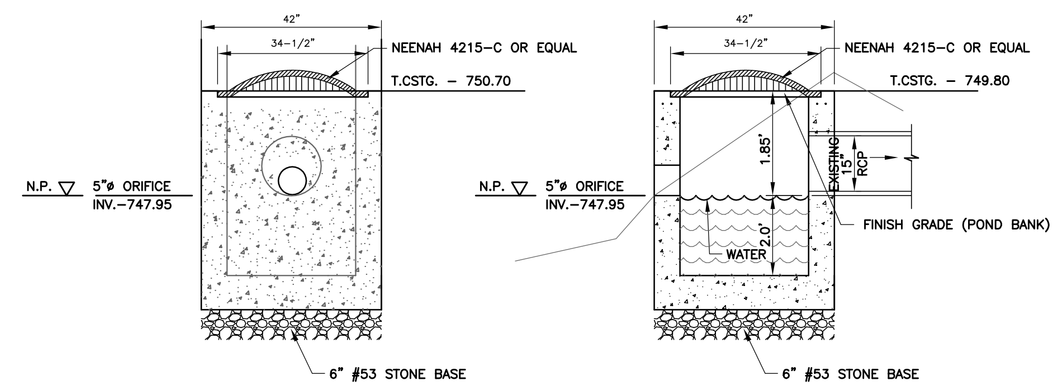

POND #2 CONTROL STRUCTURE

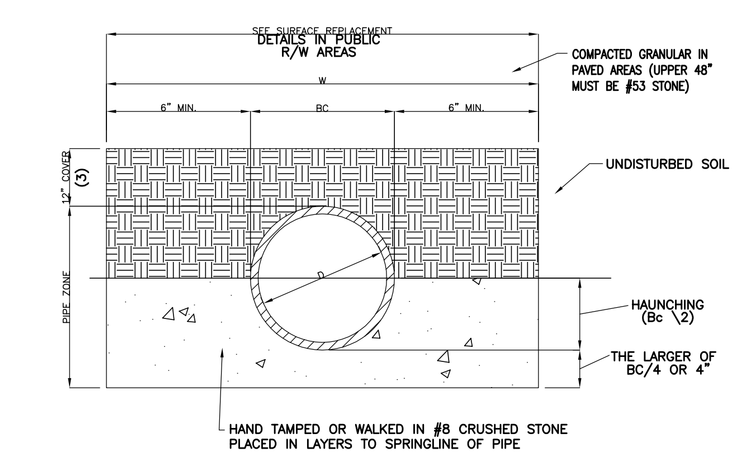

W = MAXIMUM ALLOWABLE TRENCH WIDTH FOR PIPE AS PER ASTM
NOT TO EXCEED FOUR (4) FEET OR 6" THROUGH 24" PIPE
NOR SIX (6) FEET FOR 27" THROUGH 48" PIPE
D = PIPE DIAMETER (INTERNAL)
Bc= PIPE DIAMETER (EXTERNAL)

NOTES

1. BEDDING STOPS AT SPINGLINE OF THE PIPE. BACKFILLING ABOVE THIS POINT SHALL BE IN ACCORDANCE WITH THE SPECIFICATIONS.
2. WORK FALLING UNDER JURISDICTION OF THE INDIANA STATE HIGHWAY COMMISSION SHALL UTILIZE COMPACTED GRANULAR BACKFILL MATERIAL FOR INITIAL AND FINAL BACKFILL ANYWHERE WITHIN 12 FEET OF THE EDGE OF PAVEMENT. OTHERWISE, COMPACTED GRANULAR BACKFILL MATERIAL SHALL ONLY BE USED UNDER PAVEMENT SURFACES OR OTHER SPECIFICALLY DESIGNATED AREAS.
3. GRANULAR FILL IN PAVED AREAS

FIRST CLASS PIPE LAYING METHOD FOR: RIGID CONDUITS (RCP & CMP)

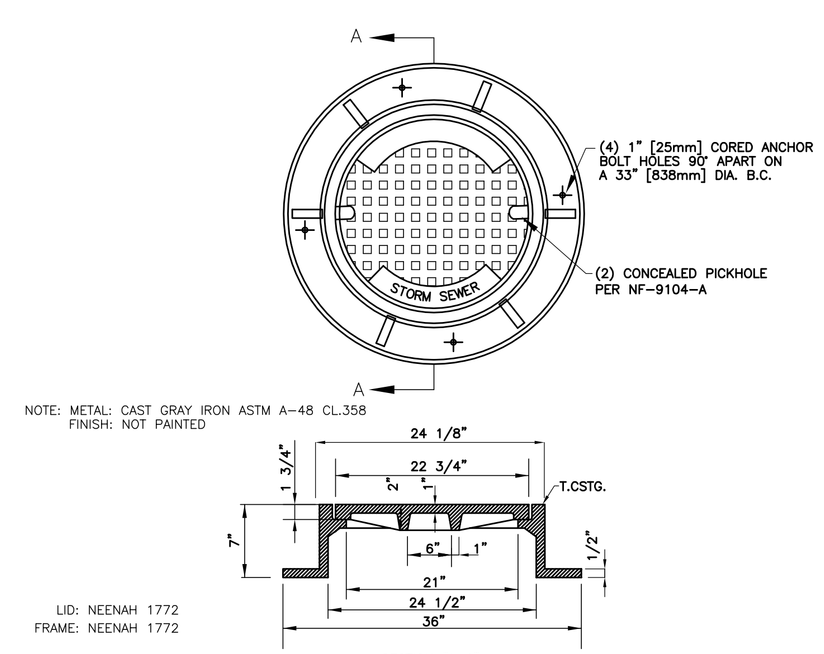

STORM SEWER MANHOLE FRAME & COVER – STANDARD MANHOLE DETAIL

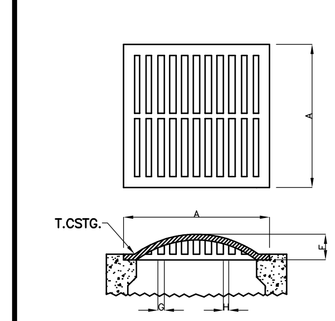

HEAVY DUTY FOR SIDE DITCH DRAINAGE

CATALOG NO.	DIMENSIONS IN INCHES						WT. LBS.
	A	F		G		H	
R-4215-A	24x30	4	1/4	1	5/8	1 1/2	160
R-4215-C	34x34	6		1	1/2	1 1/4	190

R-4215 SERIES CONVEX GRATES

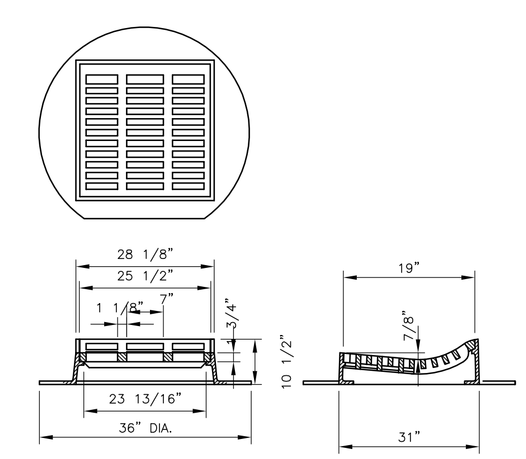

HEAVY DUTY – BICYCLE FRIENDLY

R-3501-P INLET FOR ROLL TYPE CURB

SYMBOL	REVISION	DATE

SCALE NONE
DRAWN JPH
CHECKED JKS
CERTIFIED JKS

PROJECT
DEER MEADOWS – SECTION ONE
CITY OF FRANKLIN, JOHNSON COUNTY, INDIANA

TITLE
STORM SEWER DETAILS

PROJECTS plus
GREENWOOD SURVEYING COMPANY
CIVIL ENGINEERING – LAND SURVEYING
LAND PLANNING – CONSTRUCTION MANAGEMENT
2555 Fairview Place Suite "A" – Greenwood, Indiana 46142
(317)-882-5003

SEAL
JEFFERY K. SMITH
REGISTERED No. 19419 STATE OF INDIANA
PROFESSIONAL ENGINEER
11/12/15

JOB NUMBER 15015.01

SHEET 11 OF 15 SHEETS

DATE NOVEMBER 12, 2015

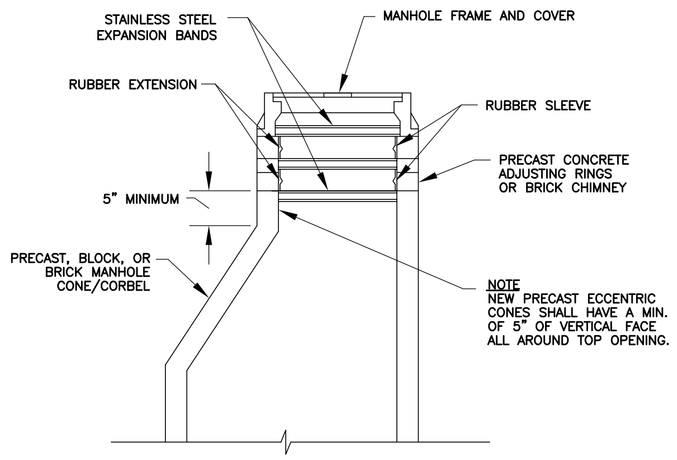

TO SPAN CHIMNEY HEIGHTS OF:	
0–4½"	STD CHIMNEY SEAL ONLY
2–7½"	WIDE CHIMNEY SEAL ONLY
OVER 4½"–10½"	STD. SEAL + 7" EXTENSION
OVER 7½"–13½"	WIDE SEAL + 7" EXTENSION

NOTE: EXTERIOR SEAL IS ALSO ACCEPTALBE

TYPICAL CHIMNEY SEAL DETAIL

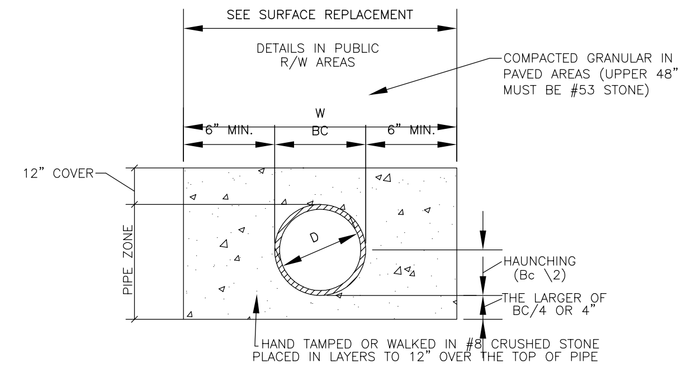

W = MAXIMUM ALLOWABLE TRENCH WIDTH FOR PIPE ASTM
NOT TO EXCEED FOUR (4) FEET OR 6" THROUGH 24" PIPE
NOR SIX (6) FEET FOR 27" THROUGH 48" PIPE
D = PIPE DIAMETER (INTERNAL)
Bc= PIPE DIAMETER (EXTERNAL)

NOTES

1. BEDDING STOPS AT A POINT 12" ABOVE THE TOP OF THE PIPE. BACKFILLING ABOVE THIS POINT SHALL BE IN ACCORDANCE WITH THE SPECIFICATIONS.
2. WORK FALLING UNDER JURISDICTION OF THE INDIANA STATE HIGHWAY COMMISSION SHALL UTILIZE COMPACTED GRANULAR BACKFILL MATERIAL FOR INITIAL AND FINAL BACKFILL ANYWHERE WITHIN 12 FEET OF THE EDGE OF PAVEMENT. OTHERWISE, COMPACTED GRANULAR BACKFILL MATERIAL SHALL ONLY BE USED UNDER PAVEMENT SURFACES OR OTHER SPECIFICALLY DESIGNATED AREAS.

FITST CLASS PIPE LAYING METHOD FOR: 1) FLEXIBLE (PVC, RPVC, ABS & HDPE PIPE) AND 2) DUCTILE IRON WITHIN PVM'T LIMITS

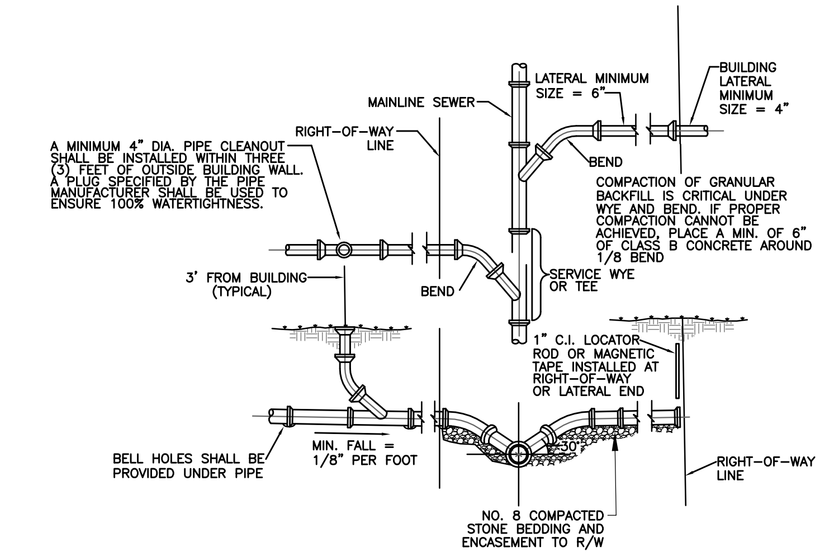

SERVICE CONNECTION FOR SHALLOW SEWERS

(LESS THAN 15' DEEP)

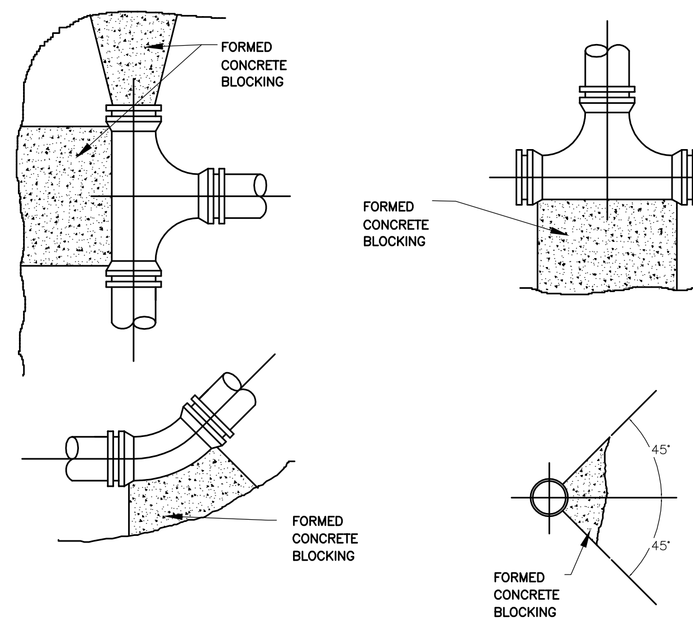

AREA IN SQ. FT. REQUIRED FOR CONC. THRUST BLOCKING

SIZE	TEE & PLUG	90° BEND	45° BEND	22 1/2° BEND	11 1/4° BEND
4"	2.0	2.5	1.5	1.0	1.0
6"	4.0	5.5	3.0	1.5	1.0
8"	6.5	9.0	5.0	2.5	1.5
10"	10.0	14.0	7.5	4.0	2.0
12"	14.0	20.0	11.0	5.5	3.0

NOTE:

THE THRUST BLOCK AREAS ARE BASED ON A SOIL BEARING LOAD OF 2000 LBS./SQ. FT.

GREASE ALL PIPE SURFACES PRIOR TO PLACEMENT OF CONCRETE.

THRUST BLOCKING DETAILS FOR FORCE MAIN

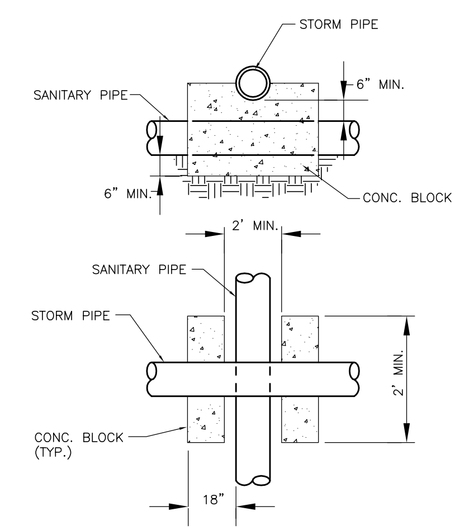

CONCRETE CRADLE

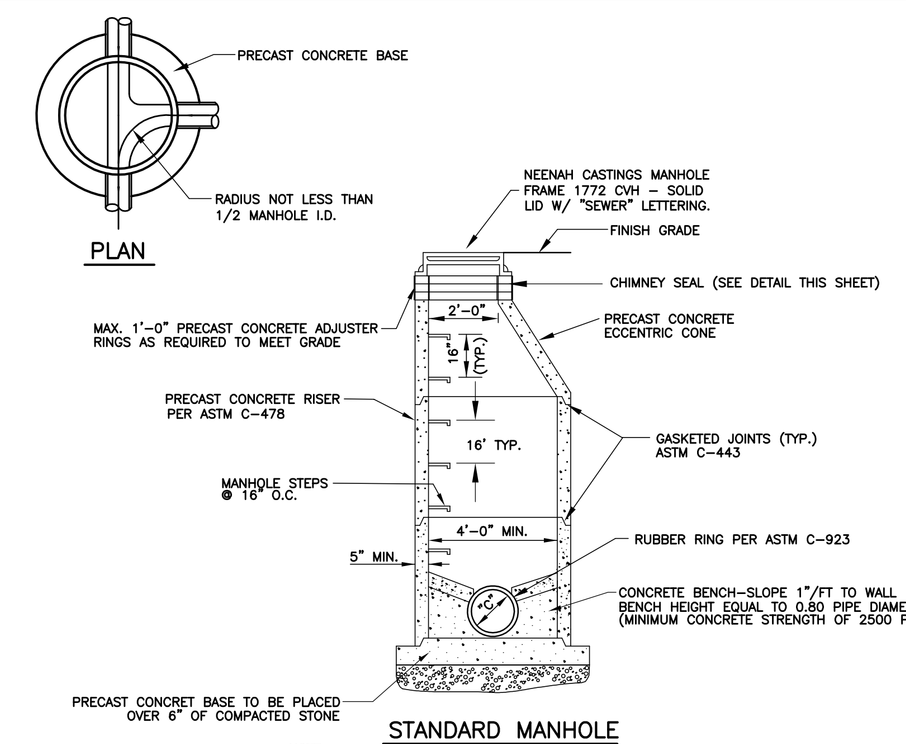

STANDARD MANHOLE

NOTE:

1. FOR ALL MANHOLES 6'–0" OR LESS IN DEPTH– PROVIDE RISER WITH FLAT TOP IN LIEU OF ECCENTRIC CONE IN ACCORDANCE WITH ASTM C–478.
2. THE CROWN OF THE INFLUENT PIPE SHALL BE AT OR ABOVE THE CROWN OF THE OUTLET PIPE.
3. DROP MANHOLES SHALL BE USED WHENEVER THE DISTANCE FROM THE INVERT OF THE INCOMING LINE AND THE BOTTOM OF THE MANHOLE IS GREATER THAN TWO FEET.

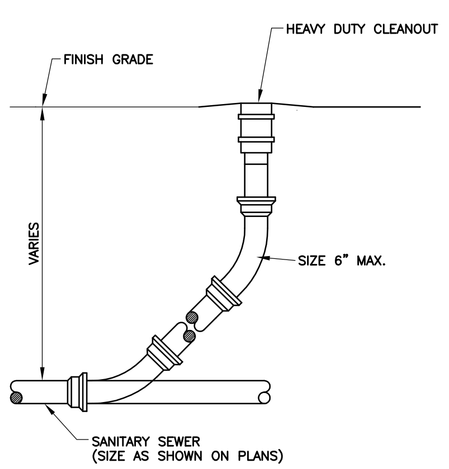

EXTERIOR CLEANOUT

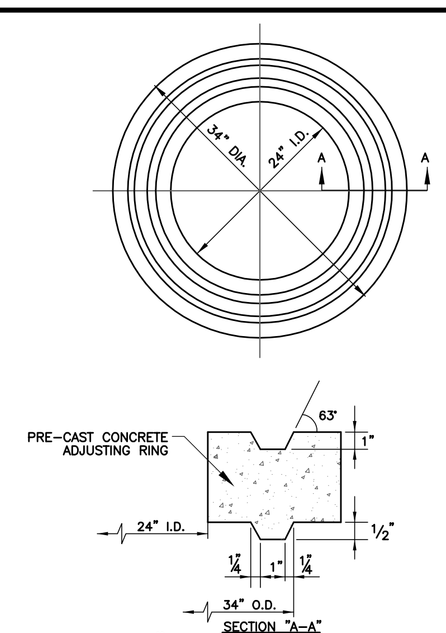

TYPICAL 1" ADJUSTING RING DETAIL

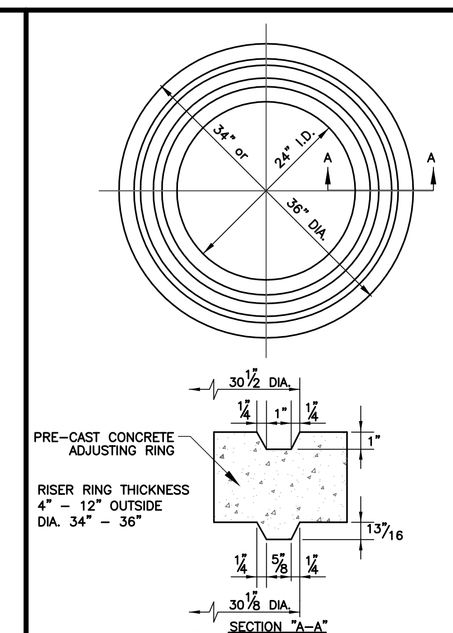

TYPICAL 5/8" ADJUSTING RING DETAIL

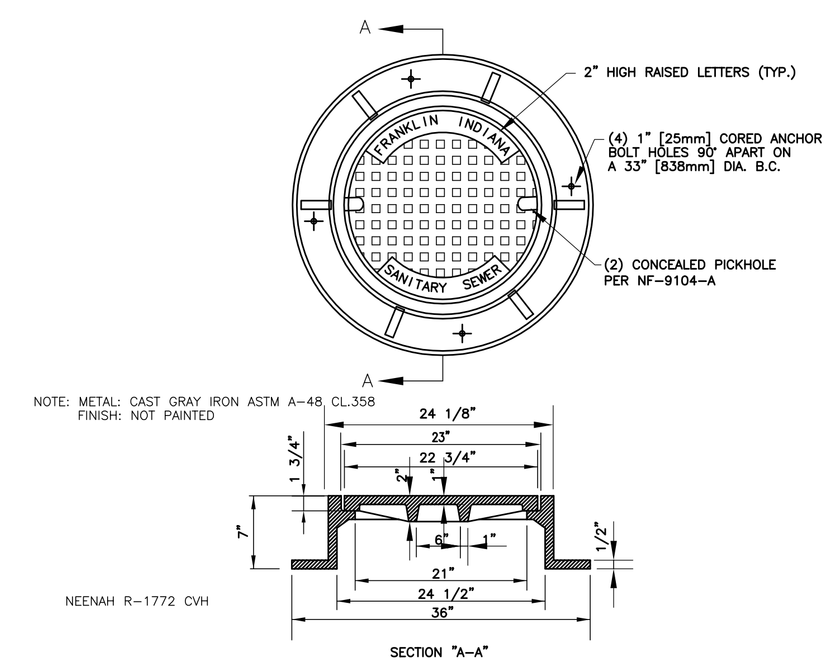

SANITARY SEWER MANHOLE FRAME & COVER – STANDARD MANHOLE DETAIL

SYMBOL	REVISION	DATE

SCALE NONE | DRAWN JPH | CHECKED JKS | CERTIFIED JKS

PROJECT: DEER MEADOWS – SECTION ONE, CITY OF FRANKLIN, JOHNSON COUNTY, INDIANA

TITLE: SANITARY SEWER DETAILS

PROJECTS plus
GREENWOOD SURVEYING COMPANY
CIVIL ENGINEERING – LAND SURVEYING
LAND PLANNING – CONSTRUCTION MANAGEMENT
2555 Fairview Place Suite "A" Greenwood, Indiana 46142
(317)-882-5003

SEAL: JEFFERY K. SMITH, REGISTERED No. 19419, STATE OF INDIANA, PROFESSIONAL ENGINEER — 11/12/15

JOB NUMBER 15015.01

SHEET 12 OF 15 SHEETS

DATE NOVEMBER 12, 2015

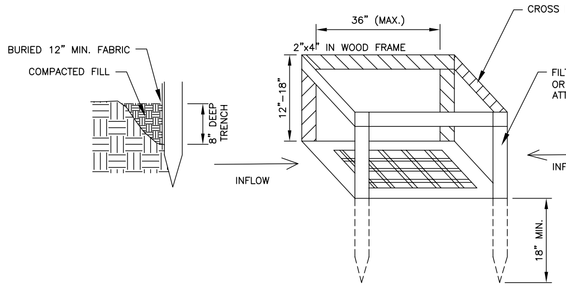

1. INSPECT ONCE PER WEEK OR AFTER EACH RAIN EVENT.
2. INSPECT GEOTEXTILE FABRIC AND MAKE NEEDED REPAIRS IMMEDIATELY
3. REMOVE SEDIMENT FROM POOL AREA TO PROVIDE STORAGE FOR THE NEXT STORM EVENT. AVOID DAMAGING OR UNDERCUTTING FABRIC DURING SEDIMENT REMOVAL.
4. WHEN CONTRIBUTING DRAINAGE AREA HAS BEEN STABILIZED, REMOVE SEDIMENT, PROPERLY DISPOSE OF ALL CONSTRUCTION MATERIAL, GRADE AREA TO THE ELEVATION OF THE STORM DRAIN INLET TOP, THEN STABILIZE IMMEDIATELY.

GEOTEXTILE FABRIC DROP INLET

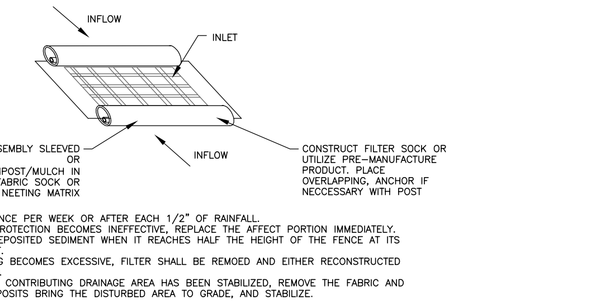

1. INSPECT ONCE PER WEEK OR AFTER EACH 1/2" OF RAINFALL.
2. IF INLET PROTECTION BECOMES INEFFECTIVE, REPLACE THE AFFECT PORTION IMMEDIATELY.
3. REMOVE DEPOSITED SEDIMENT WHEN IT REACHES HALF THE HEIGHT OF THE FENCE AT ITS LOWEST POINT.
4. IF PONDING BECOMES EXCESSIVE, FILTER SHALL BE REMOED AND EITHER RECONSTRUCTED OR REPLACED.
5. AFTER THE CONTRIBUTING DRAINAGE AREA HAS BEEN STABILIZED, REMOVE THE FABRIC AND SEDIMENT DEPOSITS BRING THE DISTURBED AREA TO GRADE, AND STABILIZE.

FILTER TUBE/FILTER SOCK

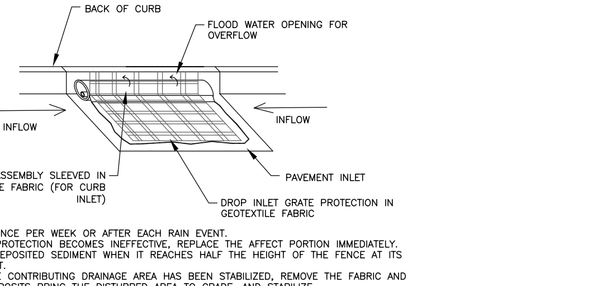

1. INSPECT ONCE PER WEEK OR AFTER EACH RAIN EVENT.
2. IF INLET PROTECTION BECOMES INEFFECTIVE, REPLACE THE AFFECT PORTION IMMEDIATELY.
3. REMOVE DEPOSITED SEDIMENT WHEN IT REACHES HALF THE HEIGHT OF THE FENCE AT ITS LOWEST POINT.
4. AFTER THE CONTRIBUTING DRAINAGE AREA HAS BEEN STABILIZED, REMOVE THE FABRIC AND SEDIMENT DEPOSITS BRING THE DISTURBED AREA TO GRADE, AND STABILIZE.

PROTECTION DETAIL (PAVEMENT INLET)

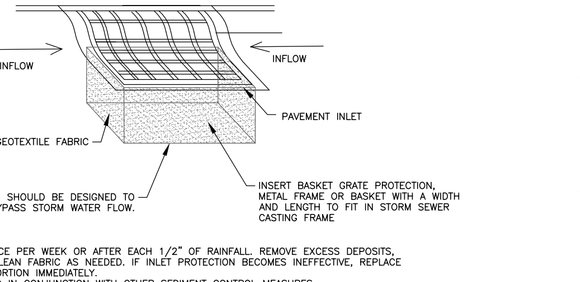

1. INSPECT ONCE PER WEEK OR AFTER EACH 1/2" OF RAINFALL. REMOVE EXCESS DEPOSITS, REPLACE OR CLEAN FABRIC AS NEEDED. IF INLET PROTECTION BECOMES INEFFECTIVE, REPLACE THE AFFECT PORTION IMMEDIATELY.
2. TO BE USED IN CONJUNCTION WITH OTHER SEDIMENT CONTROL MEASURES
3. AFTER THE CONTRIBUTING DRAINAGE AREA HAS BEEN STABILIZED, REMOVE THE INSERT AND SEDIMENT DEPOSITS.

TEMPORARY BASKET INSERT PROTECTION DETAIL (PAVEMENT INLET)

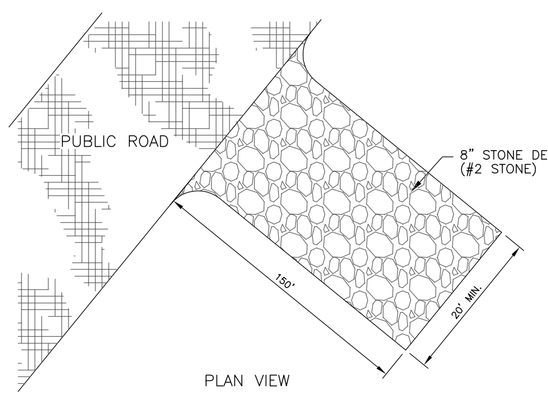

PLAN VIEW

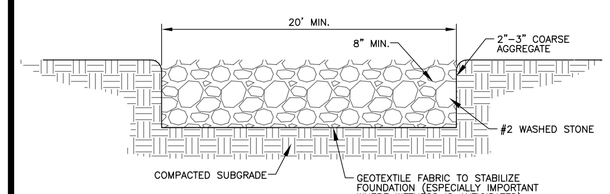

PROFILE VIEW

1. INSPECT ONCE PER WEEK OR AFTER EACH RAIN EVENT. PERIODIC TOP DRESS & RESHAPE AS REQUIRED. IMMEDIALTEY REMOVE MUD AND SEDIMENT TO PREVENT TRACKING ON TO PUBLIC ROADS.
2. REFER TO CHAPTER 7 OF THE INDIANA STORM WATER QUALITY MANUAL, DATED, OCTOBER 2007 FOR REQUIRED PRACTICES FOR THE CONSTRUCTION ENTRANCE.

TEMPORARY CONSTRUCTION ENTRANCE DETAIL

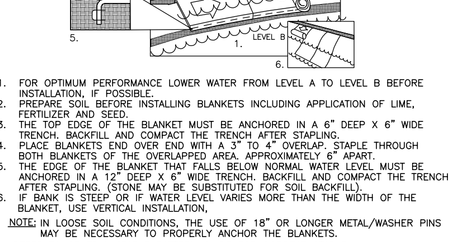

1. INSPECT ONCE PER WEEK OR AFTER EACH 1/2" OF RAINFALL. REMOVE EXCESS DEPOSITS, REPLACE OR CLEAN FABRIC AS NEEDED. IF INLET PROTECTION BECOMES INEFFECTIVE, REPLACE THE AFFECT PORTION IMMEDIATELY.
2. TO BE USED IN CONJUNCTION WITH OTHER SEDIMENT CONTROL MEASURES
3. AFTER THE CONTRIBUTING DRAINAGE AREA HAS BEEN STABILIZED, REMOVE THE INSERT AND SEDIMENT DEPOSITS.

TEMPORARY BASKET INSERT PROTECTION DETAIL (PAVEMENT INLET)

SECTION 2 – MATERIAL HANDLING AND SPILL PREVENTION PLAN

MATERIAL HANDLING AND SPILL PREVENTION PLAN:
IN ORDER TO MINIMIZE THE RELEASE OF POTENTIAL POLLUTANTS DURING CONSTRUCTION THE CONTRACTORS SHALL IMPLEMENT THIS MATERIAL HANDLING AND SPILL PREVENTION PLAN. THE CONTRACTOR SHALL REVIEW THIS PLAN WITH ALL SUBCONTRACTORS AND REQUIRE THAT THEY IMPLEMENT THE PLAN AS WELL.

1. CONSTRUCTION EQUIPMENT
A. FUELING, LUBRICATION AND FLUIDS: ALL OPERATIONS INVOLVING THE ADDITION OF FLUIDS TO EQUIPMENT SHOULD BE DONE IN ONE LOCATION, AS DESIGNATED BY THE GENERAL CONTRACTOR, OR DEVELOPER/OWNER, SO THAT SPILLS ARE LIMITED TO ONE LOCATION ON THE SITE, WHICH WILL FACILITATE THE CLEANUP OF SPILLS. IF AN ONSITE-FUELING TANK IS PLANNED TO BE ON SITE, IT SHALL BE DOUBLE WALLED AND STORED IN THIS DESIGNED AREA. THIS LOCATION IS AN AREA THAT WILL NOT ALLOW SPILLED FLUIDS TO MIGRATE INTO SUBSURFACE SOILS. IN THE EVENT OF A SPILL, THE FLUID SHALL IMMEDIATELY BE CLEANED UP BY REMOVING THE CONTAMINATED SOIL OR STONE, WHICH SHALL BE DISPOSED OF IN AN ACCEPTABLE MANNER. SPILLS ON HARD SURFACES SHALL BE SOAKED UP BY AN ACCEPTABLE MATERIAL, SUCH AS OIL DRY, AND THE ABSORBENT MATERIAL DISPOSED OF IN A PROPER MANNER. THE SPILL SHALL ALSO BE REPORTED IMMEDIATELY TO THE CONTRACTOR'S SUPERINTENDENT.
B. EQUIPMENT REPAIR, ESPECIALLY WHEN FLUIDS MUST BE REMOVED FROM THE EQUIPMENT OR THE POSSIBILITY OF FLUID SPILLS IS HIGH, SHOULD ALWAYS BE DONE OFFSITE AT A FACILITY THAT IS MORE SUITABLE THAN A CONSTRUCTION SITE TO HANDLE SPILLS. WHEN EQUIPMENT MUST BE REPAIRED ONSITE IT SHOULD BE MOVED TO THE MAINTENANCE AND FUELING AREA IF POSSIBLE. OTHERWISE, SUITABLE ON SITE CONTAINERS SHOULD BE PLACED UNDER THE EQUIPMENT DURING REPAIR TO CATCH ANY SPILLED FLUIDS AND THESE FLUIDS SHOULD BE DISPOSED OF IN A PROPER MANNER.
C. ALL REUSABLE FLUID CONTAINERS, SUCH AS GASOLINE CANS, SHALL BE INSPECTED FOR LEAKS EACH TIME THEY ARE USED. IF LEAKS ARE FOUND, THE FLUID SHALL BE REMOVED FROM THE CONTAINER IN A PROPER MANNER AND THE CONTAINER DISPOSED OF IN AN ACCEPTABLE MANNER. EMPTY DISPOSABLE CONTAINER, SUCH AS GREASE TUBES AND LUBRICATING OIL AND BRAKE FLUID CONTAINERS, AND THEIR PACKAGING, SHALL BE DISPOSED OF IN A PROPER MANNER AND SHALL NOT BE LEFT ON THE GROUND OR IN THE OPEN ON THE CONSTRUCTION SITE.
2. CONSTRUCTION MATERIALS AND THEIR PACKAGING
A. EROSION CONTROL MEASURE SHOWN ON THE SUBJECT PROJECT SHALL BE IMPLEMENTED PRIOR TO AND DURING CONSTRUCTION IN THE PROPER SEQUENCING TO MINIMIZE SOIL EROSION. EROSION CONTROLS SHALL BE INSPECTED AND MAINTAINED AS DESCRIBED ELSEWHERE ON THE PLANS. EXCESSIVE DUSTING OF SOIL ON THE SITE SHALL BE MINIMIZED BY REDUCING CONSTRUCTION TRAFFIC ACROSS BARE SOIL DURING DRY AND/OR WINDY WEATHER, AND BY APPLYING WATER OR OTHER ACCEPTABLE DUST CONTROL MEASURES TO THE SOIL. UPON COMPLETION OF CONSTRUCTION AND SUITABLE ESTABLISHMENT OF PERMANENT VEGETATION, TEMPORARY EROSION CONTROL MEASURES SUCH AS SILT FENCE, CHECK DAMS AND INLET PROTECTION DEVICES SHALL BE REMOVED IN A MANNER TO MINIMIZE ADDITIONAL LAND DISTURBANCE. ANY AREAS DISTURBED BY THESE OPERATIONS SHALL BE PROPERLY REVEGETATED.
B. LARGE WASTE MATERIALS CREATED BY CUTTING, SAWING, DRILLING, OR OTHER OPERATIONS SHALL BE PROPERLY DISPOSED OF IN A SUITABLE WASTE CONTAINERS. THE SITE SHALL BE CHECKED AT THE END OF THE DAY, AS A MINIMUM, AND ALL WASTE MATERIALS, INCLUDING THOSE BLOWN ACROSS OR OFF THE SITE BY WIND, SHALL BE PICKED UP AND DISPOSED OF IN SUITABLE CONTAINERS. WHERE POSSIBLE, OPERATIONS SUCH AS SAWING THAT CREATE SMALL PARTICLES SHOULD BE PERFORMED IN ONE SPOT IN AN AREA PROTECTED FROM WIND, AND WASTE PARTICLES COLLECTED AND DISPOSED OF FREQUENTLY TO MINIMIZE WIND DISPERSAL.
PACKAGING USED TO TRANSPORT MATERIALS TO THE SITE FOR CONSTRUCTION OF THE FACILITY SHALL BE DISPOSED OF PROPERLY. WEATHER THE MATERIAL IS TAKEN OUT OF ITS PACKAGE AND INCORPORATED INTO THE PROJECT IMMEDIATELY OR STORED ONSITE FOR FUTURE USE, PACKAGED MATERIALS STORED ONSITE SHALL BE INSPECTED REGULARLY AND ANY LOOSE PACKAGING SHALL BE REPAIRED OR DISPOSED OF PROPERLY.
C. ALL DEWATERING OF ACTIVITIES SHALL BE DONE IN ACCORDANCE TO GOOD EROSION CONTROL PRACTICES. THESE PRACTICES SHOULD INCLUDE THE USE OF DIRT BAGS SUCH AS DANDY DIRT BAGS. THE USE OF THESE TYPES OF DEWATERING DEVICES WILL REMOVE LARGE QUANTITIES OF SILT, SEDIMENT, AND DIRT AND PREVENT THESE MATERIALS TO ENTER THE STORM SEWER SYSTEM.
D. IF THE USE OF LIME IS USED TO STABILIZE THE SOIL OF THE SITE THEN ALL CONSTRUCTION EQUIPMENT USED SHALL BE CLEANED OF ALL EXCESS MATERIAL WITH WATER IN THE MAINTENANCE AND REFUELING AREA AS SHOWN WITHIN THESE PLANS.
E. NUTRIENTS AND FERTILIZERS SHALL ONLY BE USED TO ESTABLISH RAPID VEGETATION. WHEN THESE PRODUCTS ARE UTILIZED, THE USER SHOULD PAY STRICT ATTENTION TO THE PRODUCTS RECOMMENDED USAGE.
3. CONCRETE WASTE WATER
A. ALL CONCRETE WASTEWATER SHALL BE DISPOSED OF IN THE DESIGNED AREA AS DIRECTED BY THE GENERAL CONTRACTOR OR DEVELOPER/OWNER. THIS AREA IS TO BE A 3' DEEP, 10' SQUARE PIT AS DETAILED ON THE EROSION CONTROL PLAN. THIS AREA SHALL BE INSPECTED ON A DAILY BASIS AT A MINIMUM. WHEN THIS AREA BECOMES FULL, THE POLLUTANTS SHALL BE EXCAVATED, PLACED IN AN ACCEPTABLE CONTAINER AND DISPOSED OF IN PROPER MANNER.
4. PAINT PRODUCTS
A. ALL EXCESS PAINT AND THEIR RELATED PRODUCTS SHALL BE DISPOSED OF IN THE MANNER AT WHICH THE MANUFACTURER SUGGESTS. UNDER NO CIRCUMSTANCES WILL PAINT AND THEIR RELATED PRODUCTS BE CLEANED OR DISPOSED OF IN SOIL, SANITARY SEWERS, STORM SEWERS OR DETENTION BASINS. ANY VIOLATION OF THIS SHALL BE REPORTED TO THE JOB SUPERINTENDENT.
IN THE EVENT OF ACCIDENTALLY CONTAMINATION ALL EFFORTS SHOULD BE MADE TO REMOVE CONTAMINANTS IN AN APPROPRIATE MANNER. THE JOHNSON COUNTY FIRE DEPARTMENT SHOULD BE CONTACTED IMMEDIATELY TO DETERMINE IF FURTHER MEASURES ARE NEEDED.

PERMANENT SEEDING SPECIFICATIONS:
1) ALL DISTURBED LAWN AREAS SHALL RECEIVE PERMANENT SEEDING IMMEDIATELY.
2) ALL DISTURBED LAWN AREA TO HAVE A MINIMUM OF 6 INCHES OF TOPSOIL (COMPACTED THICKNESS).
3) TOPSOIL TO BE FERTILE, FRIABLE, SANDY LOAM REASONABLY FREE OF SUBSOIL, CLAY LUMPS, STONES LARGER THAN 1½", EXCESSIVE QUANTITIES OF SMALL STONE/GRAVEL, BRUSH AND OTHER LITER.
4) SOLVE ANY SURFACE OR SUBSURFACE DRAINAGE PROBLEMS AND CONSTRUCT PERMANENT EROSION CONTROL STRUCTURES.
5) PERFORM THE MAJOR FILLING, SHAPING AND SMOOTHING OF GULLIES OR ERODED AREAS.
6) HAVE TOPSOIL TESTED TO CHECK PH AND NUTRIENT LEVELS. PROVIDE FERTILIZER AND SOIL AMENDMENTS AS REQUIRED TO MEET/EXCEED MINIMUM REQUIREMENTS AS SUGGESTED ON SOILS TEST RESULTS FOR LAWNS.
7) WORK FERTILIZER AND SOIL NUTRIENTS INTO TOP 2–3 INCHES OF THE TOPSOIL WITH A SMALL DISK, HARROW OR RAKE OPERATED ACROSS THE SLOPE AS MUCH AS POSSIBLE.
8) ROLL THE TOPSOIL WITH A WATER BALLAST ROLLER WEIGHING 100 TO 300 POUNDS DEPENDING ON SOIL TYPE. ROLL WITH TOPSOIL IN A SEMI–DRY CONDITION IN TWO OPPOSITE DIRECTIONS (RIGHT ANGLES).
9) RAKE OR SCARIFY AND CUT OR FILL IRREGULARITIES THAT DEVELOP AS REQUIRED AND AGAIN ROLL UNTIL AREA IS TRUE AND UNIFORM, FREE FROM LUMPS, DEPRESSIONS AND IRREGULARITIES.
10) SOW SEED WITH ADEQUATE EQUIPMENT AT A TIME WHEN LITTLE OR NO WIND IS BLOWING. BROADCAST HALF OF SEED IN ONE DIRECTION AND THE OTHER HALF IN THE OPPOSITE DIRECTION (RIGHT ANGLES).
11) COVER SEED TO A DEPTH OF ¼" BY RAKING OR HARROWING. PROVIDE A LIGHT LAYER OF STRAW OR HAY MULCH AT A RATE OF 1½ TONS PER ACRE. APPLY TACKIFIER TO STABILIZE MULCH.
12) HYDROSEEDING IS ACCEPTABLE METHOD OF SEEDING.
13) KEEP TOPSOIL RELATIVELY MOIST UNTIL LAWN IS ESTABLISHED.
14) RESEED AREAS THAT DO NOT SHOW PROMPT GERMINATION AT 14 DAY INTERVALS UNTIL AN ACCEPTABLE STAND OF GRASS IS ASSURED.
15) ALL LAWNS SHALL BE GUARANTEED TO HAVE A FULL UNIFORM STAND OF ACCEPTABLE GRASS AT END OF ONE YEAR GUARANTEE PERIOD WITH NO BARE SPOTS COMPRISING MORE THAN 2% OF ANY LAWN AREA. ANY AREA SO NOTED WILL BE REWORKED UNTIL AN ACCEPTABLE STAND OF GRASS IS ESTABLISHED.
16) ALL LAWNS TO BE MAINTAINED UNTIL FINAL INSPECTION BY LANDSCAPE DESIGNER BUT NOT LESS THAN 60 DAYS FROM TIME OF INSTALLATION. MAINTENANCE TO INCLUDE WATERING, WEEDING, CULTIVATION, MULCHING, MOWING AND ALL OTHER NECESSARY OPERATIONS REQUIRED FOR PROPER ESTABLISHMENT OF LAWN.

SILT FENCE INSTALLATION DETAIL

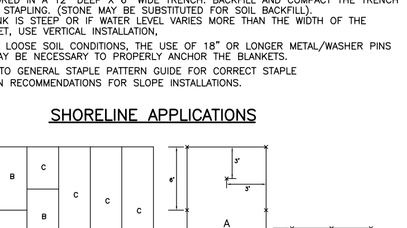

1. FOR OPTIMUM PERFORMANCE LOWER WATER FROM LEVEL A TO LEVEL B BEFORE INSTALLATION IF POSSIBLE.
2. PREPARE SOIL BEFORE INSTALLING BLANKETS INCLUDING APPLICATION OF LIME, FERTILIZER AND SEED.
3. BEGIN AT THE TOP OF THE CHANNEL BY ANCHORING THE BLANKET IN A 6" DEEP X 6" WIDE TRENCH. BACKFILL AND COMPACT THE TRENCH AFTER STAPLING.
4. ROLL CENTER BLANKET IN DIRECTION OF WATER FLOW ON BOTTOM OF CHANNEL.
5. PLACE BLANKETS OVER END (SHINGLE STYLE) WITH A 6" OVERLAP. USE A DOUBLE ROW OF STAGGERED STAPLES 4" APART TO SECURE BLANKETS.
6. FULL LENGTH EDGE OF BLANKETS AT TOP OF SIDE SLOPES MUST BE ANCHORED IN6" DEEP X 6" WIDE TRENCH. BACKFILL AND COMPACT THE TRENCH AFTER STAPLING.
7. BLANKETS ON SIDE SLOPES MUST BE OVERLAPPED 4" OVER THE CENTER BLANKET AND STAPLED.
8. IN MEDIUM HIGH FLOW CHANNEL APPLICATIONS, A STAPLE CHECK SLOT IS RECOMMENDED AT 30 TO 40 FOOT INTERVALS. USE A ROW OF STAPLES 4" APART OVER THE ENTIRE WIDTH OF THE CHANNEL. PLACE A SECOND ROW 4" BELOW THE FIRST ROW IN A STAGGERED PATTERN.
9. THE TERMINAL END OF THE BLANKETS MUST BE ANCHORED IN A 6" DEEP X 6" WIDE TRENCH. BACKFILL AND COMPACT THE TRENCH AFTER STAPLING.

NOTE:
HORIZONTAL STAPLE SPACING SHOULD BE ALTERED IF NECESSARY TO ALLOW STAPLES TO SECURE THE CRITICAL POINTS ALONG THE CHANNEL SURFACE.

CRITICAL POINTS
A. OVERLAPS AND SEAMS
B. PROJECTED WATER LINE
C. CHANNEL BOTTOM SIDE SLOPE VERTICES

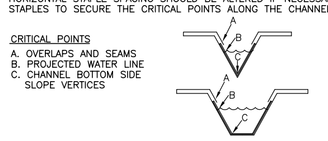

CHANNEL APPLICATIONS

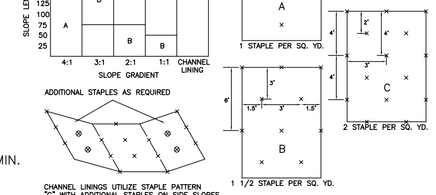

EROSION CONTROL BLANKET STAPLE PATTERN

GENERAL STAPLE RECOMMENDATIONS

STAPLE PATTERNS APPLY TO ALL NORTH AMERICAN GREEN EROSION CONTROL BLANKETS. STAPLE PATTERNS MAY VARY DEPENDING UPON SOIL TYPE AND AVERAGE ANNUAL RAINFALL.

AT SLOPE LENGTHS GREATER THAN 300 FEET OR WHERE DRAINAGE OVER LARGE AREAS IS DIRECTED ONTO THE BLANKETS, STAPLE PATTERN "C" SHOULD BE UTILIZED.

CHANNEL LININGS REQUIRED A 2.0' MINIMUM OVERLAP AT LONGITUDINAL JOINTS. SIDESLOPES SHALL REQUIRE A 6" MINIMUM OVERLAP. WHERE OVERLAPS OCCUR, THE UPSTREAM BLANKET SHALL OVERLAP THE DOWNSTREAM.

IF OTHER THAN NORTH AMERICAN GREEN EROSION CONTROL BLANKETS ARE INSTALLED FOLLOW THE INSTALLATION DIRECTIONS RECOMMENDED BY THAT PRODUCTS COMPANY.

SHORELINE APPLICATIONS

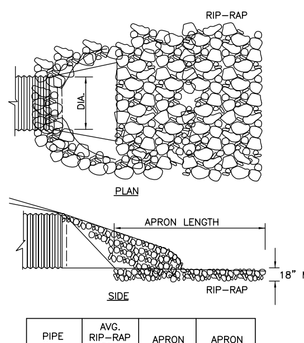

PIPE SIZE	AVG. RIP-RAP DIA.	APRON WIDTH	APRON LENGTH
12"–15"	5"	3'–4'	6'–12'
18"–21"	8"	4'–6'	8'–18'
24"–27"	10"	6'–8'	12'–22'
30"	12"	8'–10'	14'–28'
36"	14"	10'–12'	16'–32'

1. INSTALL AT LOCATION SHOWN PLANS. ENSURE SMOOTH TRANSITION TO SURROUND GRADE. INSTALL GEOTEXTILE FABRIC ON COMPACTED SUBGRADE PRIOR TO INSTALLATION OF APRON.
2. INSPECT ONCE PER WEEK OR AFTER EACH RAIN EVENT. CHECK FOR STONE DISPLACEMENT, REPLACE AS NECESSARY. CHECK FOR PIPE UNDERCUTTING AND EROSION SCOURING, REPAIRE AS NEEDED.
3. REFER TO CHAPTER 7 OF THE INDIANA STORM WATER QUALITY MANUAL, DATED, OCTOBER 2007 FOR REQUIRED PRACTICES FOR CONCRETE WASHOUTS

OUTLET PROTECTION DETAIL

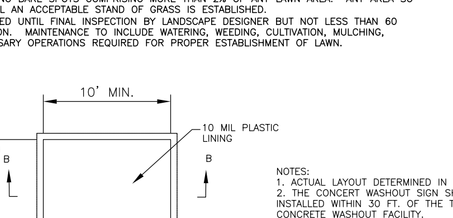

NOTES:
1. ACTUAL LAYOUT DETERMINED IN FIELD.
2. THE CONCERT WASHOUT SHOULD BE INSTALLED WITHIN 30 FT. OF THE TEMPORARY CONCRETE WASHOUT FACILITY.

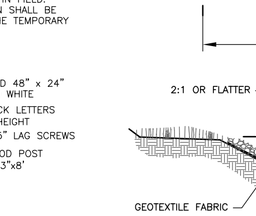

1. INSPECT ONCE PER WEEK OR AFTER EACH RAIN EVENT. CHECK FOR LEAKS AND SPILLS, REPAIR OR REPLACE ANY FAILING PORTION OF THE WASHOUT PIT. WASHOUT PIT TO BE REMOVED ONCE SYSTEM REACHES 50% OF DESIGNED CAPACITY.
2. REFER TO CHAPTER 7 OF THE INDIANA STORM WATER QUALITY MANUAL, DATED, OCTOBER 2007 FOR REQUIRED PRACTICES FOR CONCRETE WASHOUTS

CONCRETE WASHOUT DETAIL

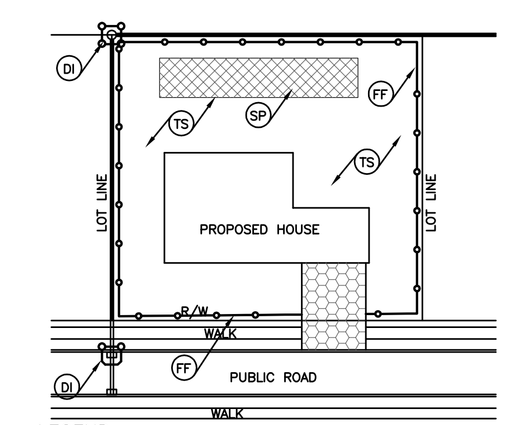

LEGEND :

- FF — FILTER FENCE
- TS — TEMPORARY–SEEDING
- DI — DROP INLET PROTECTION
- SP — STOCKPILE PROTECTION
- GRAVEL CONSTRUCTION ENTRANCE

INDIVIDUAL TOL EROSION PLAN

SOILS TYPE LEGEND

Br BROOKSTON SILTY CLAY LOAM
THE MAIN SOIL FEATURES THAT ADVERSELY AFFECT ENGINEERING USES OF THIS SOIL ARE A SEASONAL HIGH WATER TABLE, HIGH POTENTIAL FROST ACTION, MODERATE SHRINK–SWELL POTENTIAL, AND MODERATE PERMEABILITY. THIS SOIL HAS SEVERE LIMITATIONS FOR BUILDING SITES. THE SITES NEED TO BE ARTIFICIALLY DRAINED AND PROTECTED FROM FLOODING. DWELLINGS AND SMALL BUILDINGS WITH BASEMENTS SHOULD NOT BE CONSTRUCTED ON THIS SOIL. USING PROPERLY DESIGNED FOUNDATIONS AND FOOTINGS HELPS TO PREVENT STRUCTURAL DAMAGE FROM FROST ACTION AND SHRINKING AND SWELLING OF THE SOIL. THIS SOIL HAS SEVERE LIMITATIONS FOR LOCAL ROADS AND STREETS BECAUSE OF SEASONAL HIGH WATER TABLE AND HIGH POTENTIAL FROST ACTION. INSTALLATION OF DRAINAGE DITCHES ALONG ROADS HELPS TO LOWER THE WATER TABLE AND PREVENT DAMAGE FROM FROST ACTION. THE BASE MATERIAL FOR ROADS AND STREETS SHOULD BE REPLACED OR STRENGTHENED WITH SUITABLE MATERIAL.

CrA CROSBY SILT LOAM, 0 TO 2 PERCENT SLOPES
THE MAIN SOIL FEATURES THAT ADVERSELY AFFECT ENGINEERING USES OF THIS SOIL ARE MODERATE POTENTIAL FROST ACTION, MODERATE PERMEABILITY IN THE SUBSOIL, RAPID PERMEABILITY IN THE UNDERLYING MATERIAL, AND MODERATE SHRINK–SWELL POTENTIAL. THIS SOIL HAS SLIGHT LIMITATIONS FOR BUILDING SITES AND SEPTIC TANK ABSORPTION FIELDS. IT HAS MODERATE LIMITATIONS FOR LOCAL ROADS AND STREETS BECAUSE OF SHRINK–SWELL POTENTIAL. THE BASE MATERIAL FOR ROADS NEEDS TO BE STRENGTHENED OR REPLACED WITH SUITABLE MATERIAL.

MmB2 MIAMI SILT LOAM, 2 TO 6 PERCENT SLOPES, ERODED. THE MAIN SOIL FEATURES THAT ADVERSELY AFFECT ENGINEERING USES ARE MODERATE POTENTIAL FROST ACTION, MODERATE SHRINK–SWELL POTENTIAL, AND MODERATELY SLOW PERMEABILITY. THE SOIL HAS SEVERE LIMITATIONS FOR BUILDING SITES BECAUSE OF SLOPE. THIS SOIL HAS SEVERE LIMITATIONS FOR LOCAL ROADS AND STREETS. THIS SOIL HAS SEVERE LIMITATIONS FOR SEPTIC TANK ABSORPTION FIELDS BECAUSE OF MODERATELY SLOW PERMEABILITY AND SLOPE.

CsB2 CROSBY–MIAMI SILT LOAM
2 TO 4 PERCENT SLOPES. THE MAIN SOIL FEATURES THAT ADVERSELY AFFECT THE ENGINEERING USES OF THIS SOIL ARE A SEASONAL HIGH WATER TABLE, MODERATE SHRINK–SWELL POTENTIAL, HIGH POTENTIAL FROST ACTION, AND SLOW PERMEABILITY. THIS SOIL HAS SOME SEVERE LIMITATIONS FOR BUILDING SITES. THE SITES NEED TO BE ARTIFICIALLY DRAINED TO PREVENT WETNESS FROM BECOMING A PROBLEM. DWELLINGS AND SMALL BUILDINGS WITH BASEMENTS SHOULD NOT BE CONSTRUCTED ON THIS SOIL. USING PROPERLY DRAINED FOUNDATIONS AND FOOTINGS HELPS TO PREVENT STRUCTURAL DAMAGE FROM LOW STRENGTH AND SHRINKING AND SWELLING OF THE SOIL. THIS SOIL HAS SEVER LIMITATIONS FOR LOCAL ROADS AND STREETS. THE BASE MATERIAL FOR ROADS NEEDS TO BE STRENGTHENED OR REPLACED WITH SUITABLE MATERIAL.

MIC3 MIAMI CLAY LOAM
6 TO 12 PERCENT SLOPES, SEVERELY ERODED. THE MAIN SOIL FEATURES THAT ADVERSELY AFFECT THE ENGINEERING USES OF THIS SOIL ARE A MODERATE SHRINK–SWELL POTENTIAL, MODERATE POTENTIAL FROST ACTION, AND SLOW PERMEABILITY. THIS SOIL HAS MODERATE LIMITATIONS FOR LOCAL ROADS AND STREETS. THE BASE MATERIAL FOR ROADS NEEDS TO BE STRENGTHENED OR REPLACED WITH SUITABLE MATERIAL.

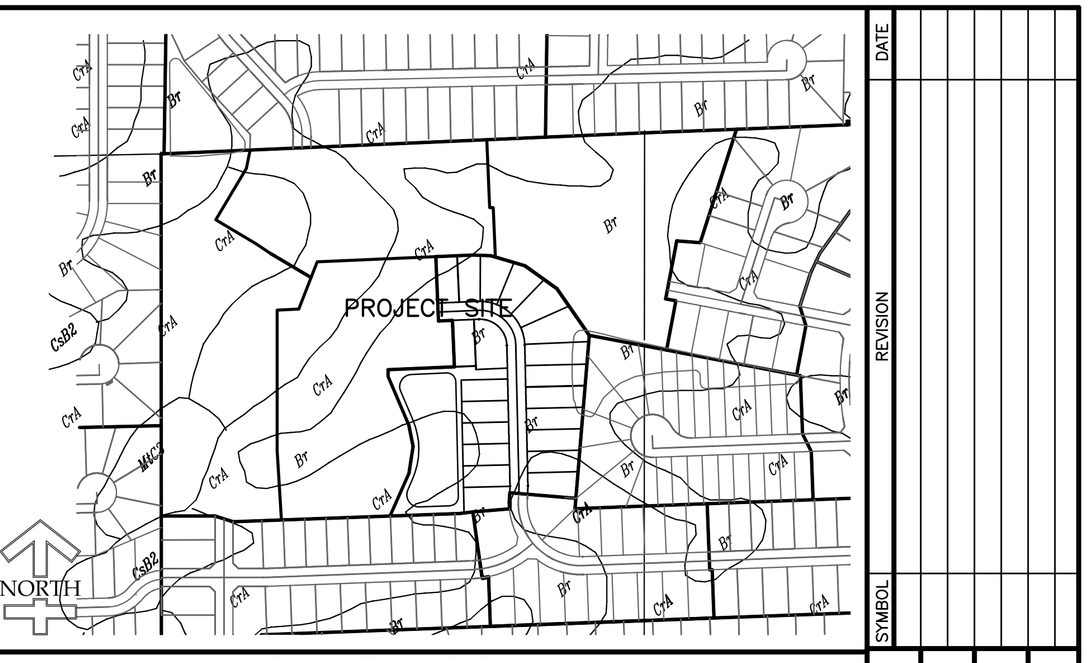

TEMPORARY SEEDING DATES:

	JAN	FEB	MAR	APR	MAY	JUN	JUL	AUG	SEP	OCT	NOV	DEC
WHEAT OR RYE												
OATS												
ANNUAL RYEGRASS												

PERMANENT SEEDING DATES

	JAN	FEB	MAR	APR	MAY	JUN	JUL	AUG	SEP	OCT	NOV	DEC
NON–IRRIGATED2												
IRRIGATED												
DORMAT SEEDING22												

IRRIGATION NEEDED DURING THIS PERIOD, TO CONTROL EROSION AT TIMES OTHER THAN IN THE SHADED AREAS, USE MULCH

* LATE SUMMER SEEDING DATES MAY BE EXTENDED 5 DAYS IF MULCH IS APPLIED.

** INCREASE SEEDING APPLICATION BY 50%

FIGURE 5–3

TEMPORARY SEEDING:

KIND OF SEED	1000 SQ.FT.	ACRE	REMARKS
WHEAT OR RYE	3.5 LBS.	2 BU.	COVER SEED 1" TO 1–1/2" DEEP
SPRING OATS	2.3 LBS.	3 BU.	COVER SEED TO 1" DEEP
ANNUAL RYEGRASS	1 LB.	40 LBS.	COVER SEED TO 1/4" DEEP

* NOT NECESSARY WHERE MULCH IS APPLIED.

SEEDING SCHEDULE

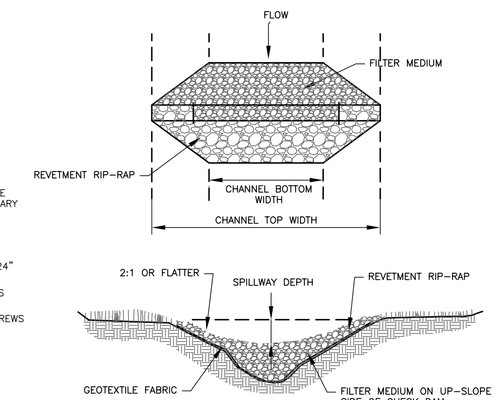

ROCK CHECK DAM DETAIL

SECTION 1 – EMERGENCY RESPONSE NUMBERS

EMERGENCY RESPONSE TO ANY LIFE THREATENING PROBLEM	911
COUNTY FIRE DEPARTMENT	911
COUNTY POLICE DEPARTMENT	911
INDIANA DEPARTMENT OF NATURAL RESOURCES	812–477–8773
INDIANA DEPARTMENT OF ENVIRONMENTAL MANAGEMENT	317–233–7745
JOHNSON COUNTY SOIL AND WATER	317–342–5594

THIS PLAN TO BE USED FOR EROSION CONTROL PURPOSES ONLY. THE CITY/COUNTY ENGINEER HAS THE RIGHT TO REQUIRE ADDITIONAL EROSION CONTROL MEASURES IN THE FIELD AS CONDITIONS WARRANT.

ALL EROSION CONTROL PRACTICES SHALL BE IN ACCORDANCE WITH THE INDIANA STORM WATER QUALITY MANUAL DATED OCTOBER 2007 BY THE INDIANA DEPARTMENT OF ENVIRONMENTAL MANAGE

THRUST BLOCK REQUIREMENTS				
FITTING	TOTAL POUNDS THRUST	TOTAL BEARING AREA (S.F.)	THRUST BLOCK HEIGHT (FT.)	THRUST BLOCK WIDTH (FT.)
6" 90° BEND	12,000	6	2.5	2.5
6" 45° BEND	6,700	3.5	1.75	2
6" TEE OR PLUG	8,400	4	2	2
8" 90° BEND	19,000	9	3	3
8" 45° BEND	10,500	5	2.5	2
8" TEE OR PLUG	13,500	6.5	2.75	2.5
10" 90° BEND	28,000	14	4	3.5
10" 45° BEND	15,500	8	2.75	3
10" TEE OR PLUG	19,500	10	3.5	3
12" 90° BEND	41,000	20	4	5
12" 45° BEND	23,000	12	3	4
12" TEE OR PLUG	28,000	14	3.5	4
16" 90° BEND	70,000	35	6	6
16" 45° BEND	38,000	19	4	5
16" TEE OR PLUG	50,000	25	5	5

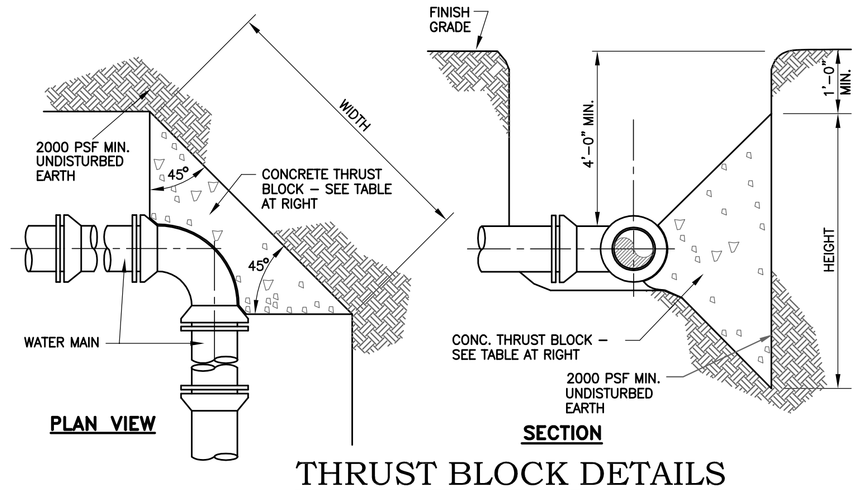

THRUST BLOCK DETAILS

NO SCALE

61-300-15 SK

THRUST BLOCK DESIGN DATA

MAXIMUM OPERATING PRESSURE: 85 P.S.I.

SURGE ALLOWANCE: 100 P.S.I.

THRUST DESIGN PRESSURE: 185 P.S.I.

BASED ON 2000 P.S.F. SOIL

THRUST BLOCK NOTES:

1. PIPE JOINT AND BOLTS MUST BE ACCESSIBLE.
2. CONCRETE SHALL BE CURED FOR MINIMUM OF 7 DAYS AND SHALL HAVE A COMPRESSION STRENGTH OF 3000 P.S.I. @ 28 DAYS.
3. THRUST BLOCKS SHALL BE POSITIONED TO COUNTERACT THE DIRECTION OF THE RESULTANT THRUST FORCE.
4. CONTRACTOR SHALL NOTIFY ENGINEER IF SOIL OF LESS THAN 2000 P.S.F. IS ENCOUNTERED.
5. FIVE (5) MIL POLYETHYLENE PLASTIC SHALL BE USED TO COVER FITTINGS PRIOR TO POURING THE THRUST BLOCK.

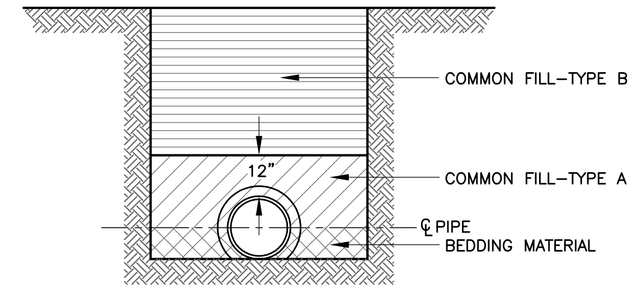

EARTH EXCAVATION

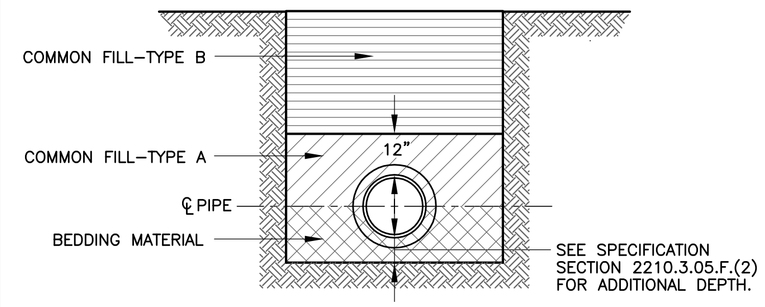

ROCK EXCAVATION

NOTE: SEE SPECIFICATION SECTIONS 2210.2.02 AND 2210.2.03 FOR DESCRIPTIONS OF BACKFILL AND BEDDING MATERIAL.

TRENCH BACKFILL MATERIALS

NO SCALE

61-300-3 SK

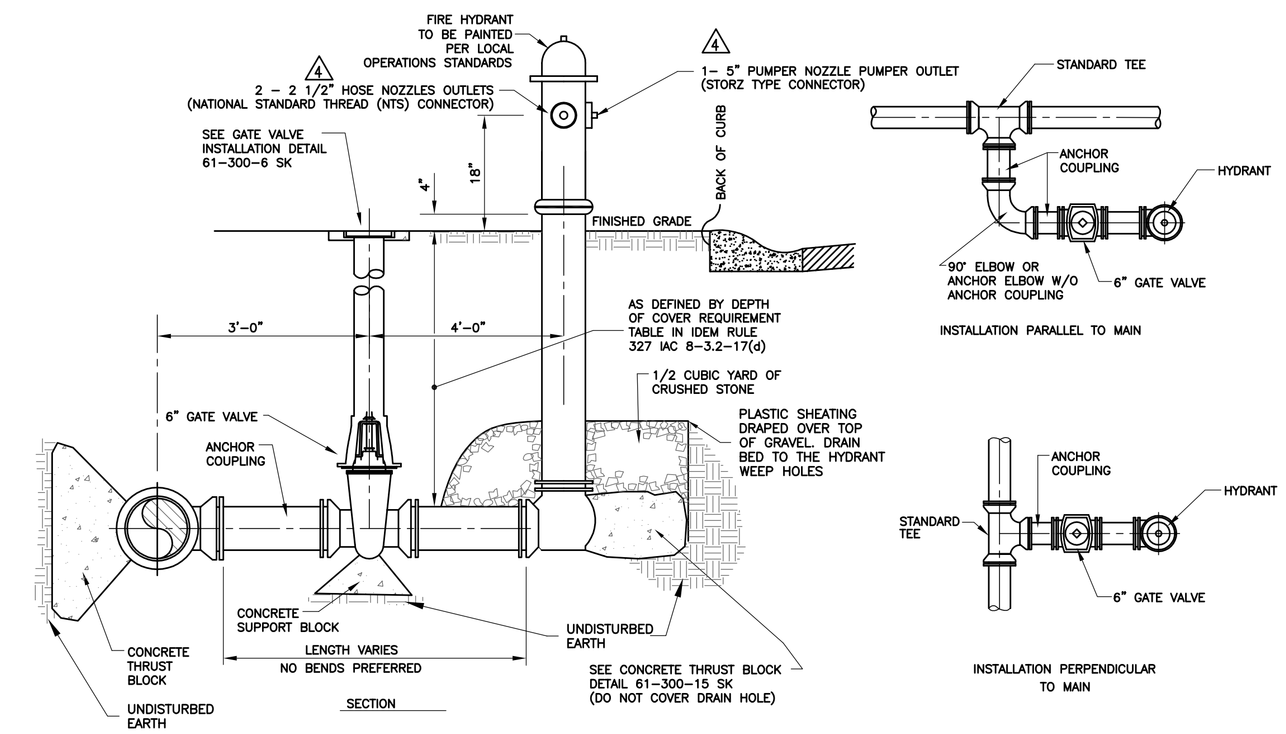

NOTE:
THE NOTED THRUST RESTRAINT MECHANISMS ARE A MINIMUM RECOMMENDATION. LOCAL OPERATIONS SHALL OFFER PREFERENCES AND CONTRACTOR SHALL BE RESPONSIBLE FOR MEANS AND METHODS.

FIRE HYDRANT DETAILS

61-300-7 SK

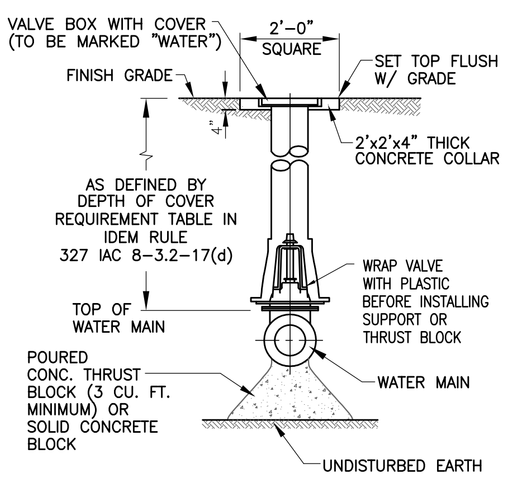

GATE VALVE INSTALLATION DETAIL

NO SCALE

61-300-6 SK

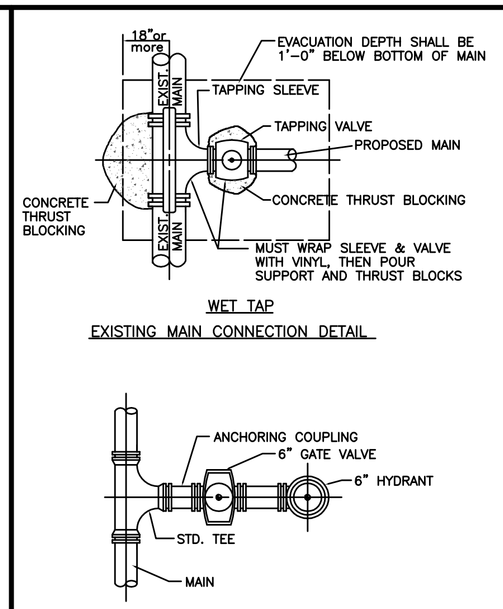

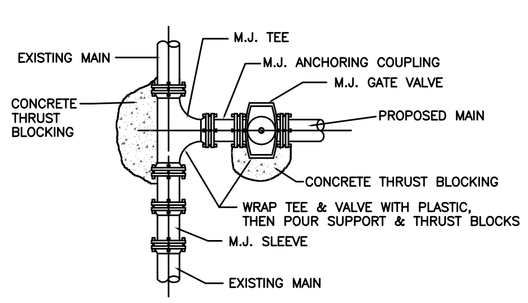

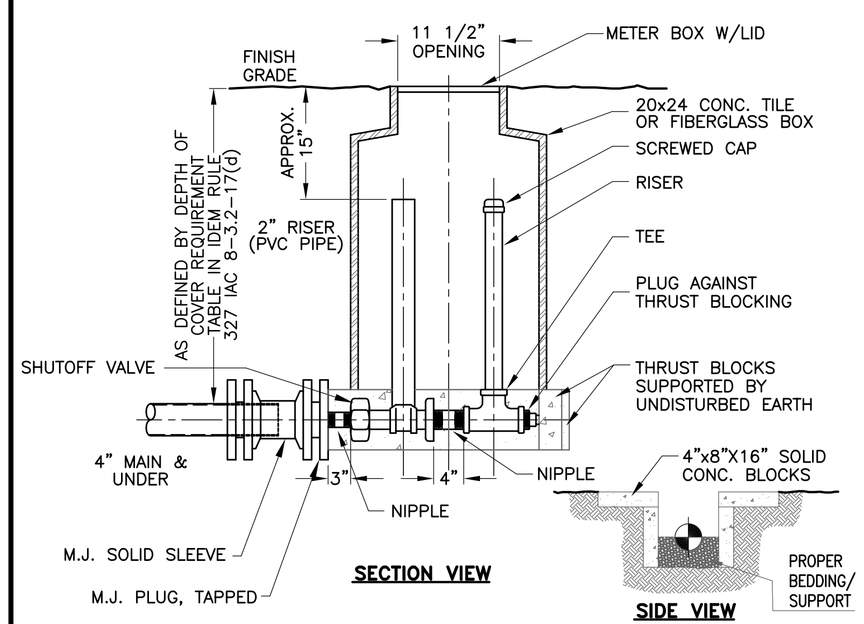

BLOW-OFF/FLUSHING OUTLET DETAIL

NO SCALE

61-300-9 SK

SIZE OF FLUSHING OUTLET SHALL BE SIZED PER TABLE BASED ON LARGEST DIAMETER MAIN TO BE FLUSHED THROUGH UNIT	
DIAMETER FLUSHING	DIAMETER FLUSHING OUTLET
4"	1–1/2"
6"	2"
8"	3"
12"	4"
16"	6"

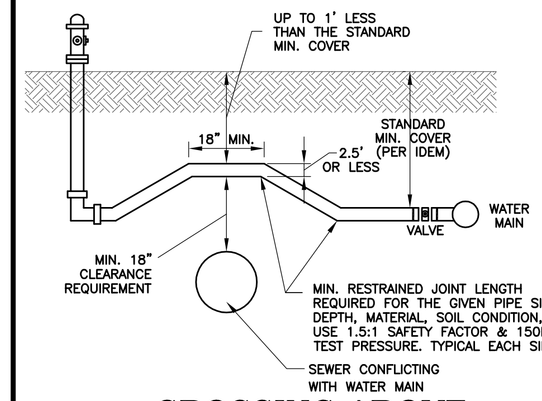

CROSSING ABOVE

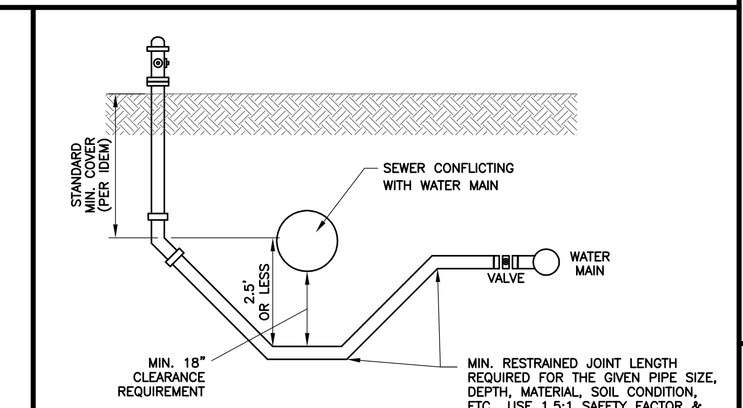

CROSSING BELOW SHALLOW CONDITION

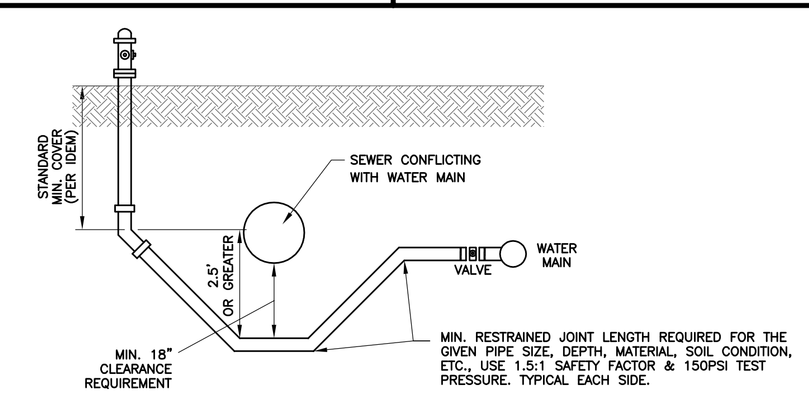

CROSSING BELOW DEEP CONDITION

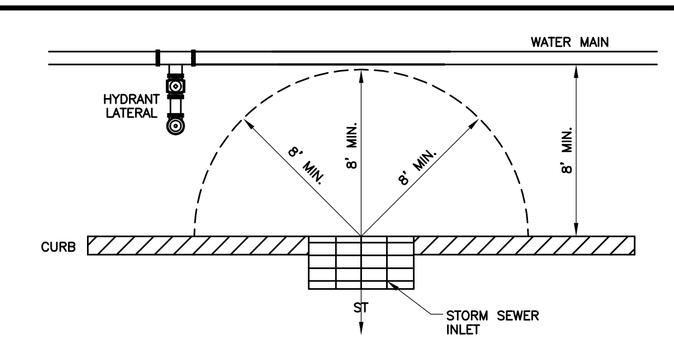

PLAN VIEW OF WATER MAIN AND HYDRANT LATERAL NEAR STORM SEWER INLET

WATER NOTES:

1. PUBLIC FIRE HYDRANTS AND WATER MAINS SHALL BE INSTALLED PER INDIANA AMERICAN WATER COMPANY REQUIREMENTS AND SPECIFICATIONS. FOR REQUIRED INSPECTIONS CONTACT INDIANA AMERICAN WATER COMPANY @ 317–881–0270
2. PRIVATE FIRE HYDRANTS AND WATER MAINS SHALL BE INSTALLED PER NFPA 24 (PRIVATE FIRE SERVICE MAINS AND THEIR APPURTENANCES) AND INDIANA AMERICAN WATER COMPANY REQUIREMENTS AND SPECIFICATIONS. FOR REQUIRED INSPECTIONS CONTACT GREENWOOD FIRE DEPARTMENT, CODE ENFORCEMENT DIVISION. 24 HOURS PRIOR TO INSPECTION @ 317–882–2599

SYMBOL	REVISION	DATE

SCALE NONE | DRAWN JPH | CHECKED JKS | CERTIFIED JKS

PROJECT: DEER MEADOWS – SECTION ONE
CITY OF FRANKLIN, JOHNSON COUNTY, INDIANA

TITLE: WATER DETAILS

PROJECTS plus
GREENWOOD SURVEYING COMPANY
CIVIL ENGINEERING – LAND SURVEYING
LAND PLANNING – CONSTRUCTION MANAGEMENT
2555 Fairview Place, Suite A – Greenwood, Indiana 46142
(317)-882-5003

SEAL: JEFFERY K. SMITH REGISTERED No. 19419 STATE OF INDIANA PROFESSIONAL ENGINEER — 11/12/15

JOB NUMBER 15015.01

SHEET 14 OF 15 SHEETS

DATE NOVEMBER 12, 2015

SITE WORK GENERAL NOTES AND SPECIFICATIONS

GENERAL:
WHEREVER A CONFLICT OR DEFICIENCY OCCURS BETWEEN THE CONSTRUCTION STANDARDS AND SPECIFICATIONS ADOPTED BY THE JOHNSON COUNTY PLANNING AND HIGHWAY DEPARTMENTS. THE HIGHER OR MORE RESTRICTIVE STANDARD OR SPECIFICATION SHALL APPLY.

REFERENCE MATERIAL:

SUBDIVISION CONTROL AND LAND DEVELOPMENT
ORDINANCE CHAPTER 102 OF CITY OF FRANKLIN AS REVISED AND CURRENT I.N.D.O.T. STANDARD SPECIFICATIONS

A. NOTICES AND PERMITS
1. THE CONTRACTOR SHALL BE RESPONSIBLE FOR OBTAINING OR VERIFYING THAT ALL PERMITS AND APPROVALS ARE OBTAINED FROM THE RESPECTIVE CITY, COUNTY AND STATE AGENCIES PRIOR TO STARTING CONSTRUCTION.
2. IT SHALL BE THE CONTRACTORS RESPONSIBILITY TO DETERMINE THE EXACT LOCATION OF ALL EXISTING UTILITIES IN THE VICINITY OF THE CONSTRUCTION AREA PRIOR TO STARTING ANY CONSTRUCTION.
3. IT SHALL BE THE CONTRACTORS RESPONSIBILITY FOR NOTIFICATION AND COORDINATION OF ALL CONSTRUCTION WITH THE RESPECTIVE UTILITY COMPANIES, PRIOR TO STARTING ANY CONSTRUCTION.
4. IT SHALL BE THE RESPONSIBILITY OF THE DEVELOPER AND CONTRACTOR TO MAINTAIN QUALITY CONTROL THROUGHOUT THE PROJECT; FAILURE TO DO SO MAY RESULT IN REMOVAL AND REPLACEMENT OF THE DEFECTIVE WORK. IT IS RECOMMENDED THAT THE DEVELOPER HAVE A QUALIFIED INSPECTOR ON THE JOB SITE AT ALL TIMES DURING CONSTRUCTION.
5. IT IS ESSENTIAL THAT THE WORK TO BE DONE IN CONJUNCTION WITH THIS PROJECT SHALL BE INSTALLED ACCORDING TO THESE SPECIFICATIONS. THE ENGINEER WILL BE REQUIRED TO CERTIFY TO CERTAIN PORTIONS OF THIS PROJECT UPON COMPLETION. THEREFORE, IT IS NECESSARY TO OBTAIN APPROVAL AND ACCEPTANCE BY THE JOHNSON COUNTY PLANNING AND HIGHWAY DEPT. THAT CONSTRUCTION WAS DONE IN COMPLIANCE WITH THESE PLANS AND SPECIFICATIONS.

B. CLEARING AND GRUBBING
1. CLEARING AND GRUBBING SHALL CONSIST OF CUTTING, REMOVAL AND SATISFACTORY DISPOSAL OF ALL TREES, DOWN TIMBER, BRUSH, PROJECTING ROOTS, STUMPS, RUBBISH, BOULDERS, BROKEN CONCRETE, FENCING (AS DESIGNATED) AND OTHER MATERIAL ON THE PROJECT SITE AND WITHIN THE BOUNDARY AS SHOWN ON THE CONSTRUCTION DOCUMENTS AND/OR AS DESIGNATED BY "CONSTRUCTION LIMITS".
2. SPECIAL CARE SHALL BE TAKEN TO INSURE THAT TREES TO BE LEFT REMAINING IN THE PROJECT AREA SHALL NOT RECEIVE LIMB, BARK OR ROOT INJURIES. WHEN SUCH INJURIES OCCUR, ALL ROUGH EDGES OF SCARRED AREAS SHALL BE REMOVED IN ACCORDANCE WITH ACCEPTED HORTICULTURAL PRACTICE AND THE SCARS COATED THOROUGHLY WITH AN ASPHALTIC BASE TREE PAINT.
3. ALL "UNSUITABLE MATERIAL" FROM CLEARING OPERATIONS STATED IN ITEM B-1 SHALL BE REMOVED TO DISPOSAL AREA(S) OFF OF THE PROJECT SITE.
4. MATERIALS SHALL NOT BE DISPOSED OF BY BURNING UNLESS APPROVED BY THE LOCAL FIRE MARSHAL.

C. TREE REMOVAL AND PROTECTION
1. TREES SHALL BE REMOVED FROM THE PROJECT SITE ONLY WHERE THE AREA IS TO BE OCCUPIED BY ROAD AND SURFACED AREAS IN ACCORDANCE WITH SPECIFICATIONS OF THE CITY OF FRANKLIN PLANNING AND HIGHWAY DEPARTMENTS.
2. TREES SHALL BE REMOVED FROM THE PROJECT SITE AS DIRECTED BY THE DEVELOPER AND SO DESIGNATED.
3. TREES SHALL BE REMOVED FROM THE PROJECT SITE WHERE THEY INTERFERE DIRECTLY WITH THE PLACEMENT OF STORM OR SANITARY SEWERS AND THAT SUCH EXCAVATION IS OR WILL BE FATAL TO SUCH ADJACENT TREES.
4. THE CONTRACTOR SHALL ENDEAVOR TO SAVE AND PROTECT TREES OF VALUE AND WORTH WHICH DO NOT IMPAIR CONSTRUCTION OF IMPROVEMENTS AS DESIGNATED. IN THE EVENT CUT OR FILL EXCEEDS 0.5 FOOT OVER THE ROOT AREA, THE DEVELOPER SHALL BE CONSULTED WITH RESPECT TO PROTECTIVE MEASURES TO BE TAKEN, IF ANY, TO PRESERVE SUCH TREES.
5. THE CONTRACTOR SHALL BE RESPONSIBLE FOR DETERMINING THE METHOD FOR PROTECTION OF TOPS, TRUNKS AND ROOTS OF EXISTING TREES ON THE PROJECT SITE THAT ARE TO REMAIN. EXISTING TREES SUBJECT TO CONSTRUCTION DAMAGE SHALL BE BOXED, FENCED OR OTHERWISE PROTECTED BEFORE ANY ADJACENT WORK IS STARTED. EARTH OR MATERIAL AND EQUIPMENT SHALL NOT BE STOCKPILED OR STORED WITHIN THE SPREAD OF BRANCHES. BRANCHES WHICH NEED TO BE REMOVED OR ARE BROKEN SHALL BE NEATLY TRIMMED AND SCARS SHALL BE COVERED WITH TREE PAINT.

D. STRIPPING OF TOPSOIL
1. THE CONTRACTOR SHALL VERIFY THAT ALL TOPSOIL HAS BEEN REMOVED IN THE AREAS TO BE OCCUPIED BY ROAD, WALKS AND DESIGNATED BUILDING AREAS. TOPSOIL SHALL BE REMOVED TO A DEPTH OF SIX (6) INCHES OR DEEPER, IF NECESSARY, TO REMOVE VEGETABLE MATTER WHERE REQUIRED.
2. TOPSOIL SHALL BE KEPT SEPARATED FROM SUITABLE FILL MATERIALS AND SHALL NOT BE USED AS FILL UNDER PAVEMENT AND/OR BUILDING AREAS.
3. TOPSOIL SHALL BE STORED AT A LOCATION WHERE IT DOES NOT INTERFERE WITH CONSTRUCTION OPERATIONS. EXCESS TOPSOIL SHALL BE USED FOR FINISH GRADING OF SITE, OF DRAINAGE SWALES, YARDS OF NEW RESIDENCES, BUFFER STRIPS, ETC.
4. TOPSOIL SHALL BE REASONABLY FREE FROM SUBSOILS DEBRIS AND STONES.

E. GRADING
1. THE CONTRACTOR SHALL PERFORM ALL GRADING OPERATIONS TO BRING SUBGRADES, AFTER FINAL COMPACTION, TO THE REQUIRED GRADES AND SECTIONS FOR SITE IMPROVEMENT.
2. SUBGRADE SHALL BE PROOF ROLLED WITH SUITABLE EQUIPMENT AND ALL SPONGY AND OTHERWISE UNSUITABLE MATERIAL SHALL BE REMOVED AND REPLACED WITH SUITABLE MATERIAL.
3. SUBGRADE SHALL BE PREPARED IN COMPLIANCE WITH SECTION 207 OF THE CURRENT I.N.D.O.T. STANDARD SPECIFICATIONS, FOR ALL AREAS OF STREET CONSTRUCTION.
4. ALL FILL MATERIAL SHALL BE FORMED FROM SOIL FREE OF DELETERIOUS MATERIAL. PRIOR TO PLACEMENT OF FILL A SAMPLE OF THE PROPOSED FILL MATERIAL SHOULD BE SUBMITTED TO A SOILS ENGINEER FOR HIS APPROVAL AND COPIES OF THE SOILD PROCTORS SHALL BE SUBMITTED TO PROJECTS PLUS.
5. ALL FILLS IN EXCESS OF TWO (2) FEET SHALL BE CONSIDERED AS STRUCTURAL FILLS AND AS SUCH SHALL BE COMPACTED IN SIX INCH LIFTS WITH COMPACTION TESTS FOR EACH LIFT. COMPACTION FOR ALL STRUCTURAL FILL AREAS SHALL BE 95 PERCENT STANDARD PROCTOR AND TEST RESULTS SHALL BE SUBMITTED TO PROJECTS PLUS.
6. ALL FILL MATERIAL IN AREAS OUTSIDE OF BUILDING AND PAVEMENT AREAS SHALL BE COMPACTED LIGHTLY AND PROTECTED FROM EROSION BY ONE OR MORE OF THE METHODS OF ITEM G. ALL AREAS WHERE BUILDING AND PAVEMENT CONSTRUCTION IS FEASIBLE SHALL NOT HAVE UNSUITABLE MATERIAL PLACED IN THAT LOCATION, AND FILL SHALL BE COMPACTED TO 95% STANDARD PROCTOR OR BETTER.

F. STANDARD SANITARY SEWER CONSTRUCTION
1. CURRENT CITY OF FRANKLIN SPECIFICATIONS SHALL PREVAIL AS TO MATERIALS AND METHODS OF CONSTRUCTION.
2. THE CONTRACTOR SHALL BE RESPONSIBLE FOR OBTAINING OR VERIFYING ALL PERMITS FOR ALL OR PORTIONS OF THIS PROJECT PRIOR TO STARTING ANY CONSTRUCTION.
3. SANITARY SEWERS SHALL BE INSTALLED IN ACCORDANCE WITH 327 IAC 3-6 TECHNICAL STANDARDS FOR SANITARY COLLECTION SYSTEMS, AND DEPARTMENT OF ENVIRONMENTAL MANAGEMENT AND PERMITS SHALL BE OBTAINED PRIOR TO STARTING AND CONSTRUCTION.
4. SANITARY SEWERS SHOWN ON THE CONSTRUCTION PLANS WERE DESIGNED WITH POLY-VINYL CHLORIDE PIPE IN ACCORDANCE WITH A.S.T.M. D-3034, S.D.R.-35 FOR PIPES THAT ARE 15 INCH IN DIAMETER OR LESS AND ARE LESS THAN 15 FEET DEEP. PVC PIPE AND FITTINGS THAT ARE GREATER THAN 18 INCH IN DIAMETER SHALL CONFORM TO A.S.T.M. F-679. ALL SANITARY PIPES GREATER THAN 15 FEET DEEP SHALL BE RATED AS HEAVY WALL S.D.R.-26. ALL FITTINGS REGARDLESS OF DEPTH SHALL BE NOTED AS HEAVY WALL S.D.R.-26. THE FORCEMAIN SHALL BE AWWA C-900, DR14.
5. NOT USED
6. SANITARY MANHOLES SHALL BE PRECAST CONCRETE IN ACCORDANCE WITH A.S.T.M. C-478. ALL JOINTS AND LIFTING HOLES ON THE EXTERIOR, SHALL BE SEALED WITH NON-SHRINK GROUT. INTERIOR LIFT HOLES PROHIBITED.
7. CASTINGS SHALL BE OF TYPE AND KIND AS SHOWN ON THE DETAIL SHEET.
8. PLASTIC SANITARY SEWERS SHALL BE MARKED FOR EASY IDENTIFICATION.
9. WATER AND SEWER LINE CROSSINGS AND SEPARATIONS SHALL BE IN ACCORDANCE WITH TEN STATES STANDARDS AND LOCAL CODES.
   a. WHERE WATER LINES AND SEWER LINES CROSS AND THE WATER LINE CANNOT BE PLACED ABOVE THE SEWER LINE A MINIMUM OF 18" WITH A MINIMUM COVER OF 48". THE SEWER LINE SHALL BE CONSTRUCTED OF WATERWORKS GRADE CAST IRON PIPE WITH MECHANICAL JOINTS.
   b. WHERE WATER LINES AND SANITARY SEWER LINES RUN PARALLEL WITH ONE ANOTHER, A MINIMUM OF 10' HORIZONTAL SEPARATION SHALL BE MAINTAINED.
10. ALL FUTURE SEWER INSTALLATION, EITHER CONNECTED TO OR EXTENDED FROM THIS SYSTEM, SHALL BE CONSTRUCTED IN ACCORDANCE WITH THESE SPECIFICATIONS.
11. NO ROOF DRAINS, FOOTING DRAINS, AND/OR SURFACE WATER DRAINS MAY BE CONNECTED TO THE SANITARY SEWER SYSTEMS, INCLUDING TEMPORARY CONNECTIONS DURING CONSTRUCTION, INCLUDING SUMP PUMPS, ARE PROHIBITED.
12. BUILDINGS SHALL BE SERVICED BY A 6" MINIMUM SANITARY SEWER LATERAL. THE ENDS SHALL BE PLUGGED AND SEALED WITH A WATER TIGHT PLASTIC DISC. WYES ARE TO BE TILTED UP TO 45 DEGREES FROM THE HORIZONTAL, WITH SUITABLE FITTINGS FOR ALL CHANGES IN DIRECTION. IF 6" PVC LATERALS ARE USED, THEY SHALL BE IN ACCORDANCE WITH A.S.T.M. D-3034 AND A.S.T.M. D-2321 FOR PROPER INSTALLATION. MAGNETIC TAPE LOCATOR SHALL BE PLACED AT THE END OF EACH LATERAL TO IDENTIFY THE LOCATION OF THE LATERAL.
13. THE CONTRACTOR SHALL PROVIDE PROJECTS PLUS WITH "AS-BUILT" LATERAL LOCATIONS.
14. MANHOLE SECTIONS SHALL HAVE "O" RINGS WHICH SHALL MEET A.S.T.M. C-433.
15. MANHOLE WATERSTOPS SHALL BE INSTALLED AT ALL CONNECTIONS TO MANHOLES, WHERE FLEXIBLE TYPE MANHOLE CONNECTIONS ARE NOT USED.
16. ALL PRECAST MANHOLES SHALL BE BEDDED ON A GRANULAR FOUNDATION.
17. THE CONTRACTOR SHALL REMOVE BY PUMPING OR OTHER SUITABLE METHODS ANY WATER WHICH MAY ACCUMULATE IN TRENCHES.
18. THE CONTRACTOR SHALL BE RESPONSIBLE FOR ALL TESTS FOR LEAKAGE, INFILTRATION AND DEFLECTION AS ESTABLISHED BY THE CITY OF FRANKLIN, I.D.E.M. AND THE STATE BOARD OF HEALTH, AND THE SANITARY SEWER CONTRACTOR SHALL BE RESPONSIBLE FOR PROVIDING CERTIFIED TESTS RESULTS TO THE ENGINEER. ANY PORTIONS NOT PASSING SAID TESTS FOR ACCEPTANCE SHALL BE REPAIRED OR REPLACED AT THE SANITARY SEWER CONTRACTORS EXPENSE, INCLUDING RE-EXCAVATION AND BACKFILL.

a. DEFLECTION TEST
1a. DEFLECTION TESTS SHALL BE PERFORMED ON ALL FLEXIBLE PIPE. THE TEST SHALL BE CONDUCTED AFTER THE FINAL BACKFILL HAS BEEN IN PLACE AT LEASTS 30 DAYS TO PERMIT STABILIZATION OF THE SOIL-PIPE SYSTEM.

1b. NO PIPE SHALL EXCEED A DEFLECTION OF 5 PERCENT. IF DEFLECTION EXCEEDS 5 PERCENT, REPLACEMENT OR CORRECTION SHALL BE ACCOMPLISHED IN ACCORDANCE WITH REQUIREMENTS IN THE APPROVED SPECIFICATIONS.

1c. THE RIGID BALL OR MANDREL USED FOR THE DEFLECTION TEST SHALL HAVE A DIAMETER NOT LESS THAN 95 PERCENT OF THE BASE INSIDE DIAMETER OR AVERAGE INSIDE DIAMETER OF THE PIPE DEPENDING ON WHICH IS SPECIFIED IN THE ASTM SPECIFICATION, INCLUDING THE APPENDIX, TO WHICH THE PIPE IS MANUFACTURED. THE TEST SHALL BE PERFORMED WITHOUT MECHANICAL PULLING DEVICES.

b. AIR TEST
1a. THE AIR TEST SHALL, AS A MINIMUM, CONFORM TO THE TEST PROCEDURE DESCRIBED IN ASTM C-828 FOR CLAY PIPE, ASTM C 924 FOR CONCRETE PIPE, ASTM F-1417 FOR PLASTIC PIPE, AND FOR OTHER MATERIALS TEST PROCEDURES APPROVED

1b. FOR AIR TESTING, (TIME-PRESSURE DROP METHOD) EACH END OF THE SECTIONOF PIPE TO BE TESTED SHALL BE PLUGGED WITH AIR STOPPERS FURNISHED BY THE CONTRACTOR.AIR SHALL SLOWLY BE SUPPLIED TO THE PLUGGED PIPE INSTALLATION BY AN AIR COMPRESSOR, FURNISHED BY THE CONTRACTOR, UNTIL PRESSURE REACHES 4.0 P.S.I.. IF GROUNDWATER ELEVATION IS ABOVE INVERT OF SEWER BEING TESTED, AN ADDITIONAL 1.0 P.S.I. OF AIR PRESSURE SHALL BE ADDED FOR EACH 2.3 FEET OF WATER ABOVE THE INVERT OF THE SEWER. AT LEAST 2 MINUTES SHALL BE ALLOWED FOR THE AIR PRESSURE TO STABILIZE.

THE RATE OF AIR LOSS SHALL THEN BE DETERMINED BY MEASURING THE TIME INTERVAL REQUIRED FOR PRESSURE TO DECREASE FROM 3.5 TO 2.5 PSI. THE PRESSURE GAUGE AND STOP WATCH WILL BE FURNISHED BY THE OWNER.

1c. THE PIPELINE SHALL BE CONSIDERED ACCEPTABLE WHEN TESTED AT AN AVERAGE PRESSURE OF 3.0 PSI IF (1) THE TOTAL RATE OF AIR LOSS FROM ANY SECTION TESTED IN ITS ENTIRETY BETWEEN MANHOLE AND CLEANOUT STRUCTURE DOES NOT EXCEED 2.0 CFM, OR (2) THE SECTION UNDER TEST DOES NOT LOSE AIR AT A RATE GREATER THAN 0.0030 CFM PER SQUARE FOOT OF INTERNAL PIPE SURFACE.

1d. THE REQUIREMENTS OF THIS SPECIFICATION SHALL BE CONSIDERED SATISFIED IF THE TIME REQUIRED IN SECONDS FOR THE PRESSURE TO DECREASE FROM 3.5 TO 2.5 PSI IS NOT LESS THAN SHOWN IN THE "ALLOWABLE TIME TABLE".

ALLOWABLE TIME TABLE:

PIPE DIAMETER in.	MINIMUM TIME MINUS.	LENGTH FOR MINIMUM TIME FT.	TIME FOR LONGER LENGTHS	SPECIFICATION TIME FOR LENGTH (L) SHOWN, MIN;S							
				100 FT.	150 FT.	200 FT.	250 FT.	300 FT.	350 FT.	400 FT.	450 FT.
4	3:48	597	0.380	3:48	3:48	3:48	3:48	3:48	3:48	3:48	3:48
6	5:40	388	0.854	5:40	5:40	5:40	5:40	5:40	5:40	5:42	6:24
8	7:34	298	1.520	7:34	7:34	7:34	7:34	7:34	8:52	10:06	11:24
10	8:26	239	2.374	8:26	8:26	8:26	8:53	11:52	13:51	15:49	17:48
12	11:20	199	3.418	11:20	11:24	11:24	14:15	17:06	19:56	22:47	25:38
16	14:10	159	5.342	14:10	14:10	17:48	22:15	28:42	31:09	35:38	40:04
18	17:00	133	7.892	17:00	19:18	25:38	32:03	38:27	44:82	51:16	57:41
21	19:50	114	10.470	19:50	26:10	34:54	43:37	52:21	61:00	69:48	78:31
24	22:40	99	13.674	22:47	34:11	48:34	56:58	68:22	79:46	81:10	102:33
27	26:30	88	17.808	28:51	43:16	57:41	72:07	86:32	100:57	115:22	129:48
30	28:20	80	21.366	35:37	58:25	71:13	89:02	106:50	124:38	142:26	160:16
33	31:10	72	26.852	48:05	64:38	86:10	107:43	128:16	150:43	172:21	193:53
36	34:00	68	30.768	51:17	78:66	102:34	128:12	163:50	179:29	205:07	210:46

1e. FOR EXFILTRATION TEST, THE INLET END OF THE UPSTREAM AND DOWNSTREAM MANHOLES SHALL BE CLOSED WITH WATERTIGHT BULKHEADS. THEN THE SEWER AND THE UPSTREAM MANHOLE SHALL BE FILLED WITH WATER UNTIL THE ELEVATION OF WATER IN THE UPSTREAM MANHOLE IS TWO FEET HIGHER THAN THE TOP OF THE PIPE IN THE LINE BEING TESTED, OR TWO FEET ABOVE THE EXISTING GROUND WATER IN THE TRENCH, WHICHEVER IS THE HIGHER ELEVATION. THE EXFILTRATION WILL BE MEASURED BY DETERMINING THE AMOUNT OF WATER REQUIRED TO MAINTAIN THE INITIAL WATER ELEVATION FOR ONE HOUR FROM THE START OF THE TEST.

c. SANITARY MANHOLE VACUUM TESTING

ALL MANHOLE VACUUM TESTS SHALL BE CONDUCTED IN THE PRESENCE OF A REPRESENTATIVE OF THE CITY OF FRANKLIN. ALL MANHOLE TESTS SHALL BE IN ACCORDANCE WITH ASTMC 1244-93 STANDARD TEST METHOD FOR CONCRETE SEWER MANHOLES BY THE NEGATIVE AIR PRESSURE (VACUUM) TEST. CITY OF FRANKLIN MAY HAVE ADDITIONAL REQUIREMENTS.

THE VACUUM TEST EQUIPMENT SHALL CONSIST OF: INFLATABLE PLUGS FOR ALL INCOMING AND OUTGOING SEWER LINES; AN INFLATABLE TEST COLLAR TO SEAL THE MANHOLE AT THE MANHOLE FRAME; AND A VACUUM PUMP. A VACUUM GAUGE SHALL BE LOCATED IN-LINE BETWEEN THE TEST COLLAR AND THE PUMP TO ACCURATELY INDICATE THE VACUUM IN INCHES OF MERCURY WITHIN THE MANHOLE. THE VACUUM GAUGE SHALL HAVE A RANGE TO NO MORE THAN THIRTY (30) INCHES OF MERCURY, WITH SCALE MARKINGS OF NO GREATER THAN ONE-HALF (½) INCH OF MERCURY VACUUM AND AN ACCURACY TO WITHIN ± TWO PERCENT (2%) OF TRUE VACUUM.

THE VACUUM TEST SHALL BE CONDUCTED BY PLUGGING ALL INCOMING AND OUTGOING SEWER LINES IN THE MANHOLE AT A LOCATION BEYOND THE CONNECTION OF THE SEWER PIPE WITH THE MANHOLE. ALL PLUGS SHALL BE BLOCKED IN PLACE SO AS NOT TO MOVE DURING THE TEST. THE VACUUM TESTING COLLAR SHALL BE INFLATED IN THE FRAME IN ACCORDANCE WITH THE EQUIPMENT MANUFACTURER'S RECOMMENDATIONS. A VACUUM OF TEN (10) INCHES OF MERCURY SHALL BE DRAWN AND THE VACUUM PUMP TURNED OFF AND THE VALVE BETWEEN THE VACUUM PUMP AND THE VACUUM GAUGE SHALL BE TURNED OFF.

THE TIME PERIOD WHICH IS TAKEN FOR THE VACUUM TO FALL FROM TEN INCHES (10") OF MERCURY TO NINE INCHES (9") OF MERCURY SHALL BE DETERMINED. IF THE TIME TAKEN FOR THE VACUUM TO REDUCE THE TEN INCHES (10") OF MERCURY TO NINE INCHES (9") OF MERCURY IS LESS THAN THE TIME INDICATED IN THE FOLLOWING TABLE, THEN THE MANHOLE WORK SHALL BE CONSIDERED NOT ACCEPTABLE AND SHALL BE REJECTED. IF THE TIME IS EQUAL TO OR EXCEEDS THE TIME INDICATED BELOW, THE MANHOLE WORK SHALL BE ACCEPTED.

MANHOLE DEPTH (FT.)	TIME (SEC) DIAMETER= 48"	60"	72"
8	20	26	33
10	25	33	41
12	30	39	49
14	35	46	57
16	40	52	65
18	45	59	73
20	50	65	81
22	55	72	89
24	59	78	97
26	69	85	105
28	70	91	113
30	74	98	121
FOR EACH ADDITIONAL 2' ADD:	5	7	8

CONTRACTOR SHALL SUBMIT TO THE ENGINEER THE RESULTS OF EACH MANHOLE VACUUM TEST. SUCH REPORTS SHALL INCLUDE A DESCRIPTION OF THE LOCATION OF THE MANHOLE, THE TIME, DATE AND WEATHER OF THE TEST, A LIST OF ALL PERSONS PRESENT, THE DIAMETER AND DEPTH OF THE MANHOLE AND THE ALLOWABLE TEST RESULTS, AND THE ACTUAL TEST RESULTS.

ALL MANHOLES SHALL BE REPAIRED BY CONTRACTOR AND RETESTED AS DESCRIBED ABOVE UNTIL A SUCCESSFUL TEST IS MADE. AFTER EACH TEST, THE TEMPORARY PLUGS SHALL BE REMOVED.

18. PIPE SHALL BE LAID IN OPEN TRENCHES, EXCEPT WHEN CONDITIONS REQUIRE AND THE APPROPRIATE APPROVING AGENCIES GIVE WRITTEN PERMISSION FOR TUNNELING OR JACKING OF PIPE.
19. TRENCH SHALL BE OPENED SUFFICIENTLY AHEAD OF PIPE LAYING TO REVEAL OBSTRUCTIONS AND SHALL BE PROPERLY PROTECTED AND/OR BARRICADED WHEN LEFT UNATTENDED.
20. TRENCHES SHALL BE SHEETED AND BRACED AS NECESSARY TO PROTECT WORKMEN AND ADJACENT STRUCTURES. ALL TRENCHING SHALL BE DONE IN ACCORDANCE WITH I.O.S.H.A. STANDARDS TO PROTECT WORKMEN.
21. THE FLOW CHANNELS FOR THE SANITARY SEWER MANHOLES SHALL BE U-SHAPED WITH THE BENCHWALLS EXTENDING TO THE CROWN OF THE INCOMING AND OUTGOING PIPES. CHANGES IN SIZE AND GRADE SHALL BE MADE BY SMOOTH TRUE CURVES FOR ALL CONNECTING SEWERS AT EACH MANHOLE.
22. NUMBER 53 STONE BACKFILL SHALL BE REQUIRED UNDER ALL PAVEMENT AREAS AND WITHIN 5' OF THE EDGE OF PAVEMENT.
23. ALL TRENCHES UNDER PAVEMENT SHALL BE COMPACTED TO 95 PERCENT MODDIFIED PROCTOR.
25. THE MINIMUM CELL CLASSIFICATION FOR P.V.C. SHALL BE 12454B OR C PER A.S.T.M. STANDARDS
24. ALL GRAVITY AND FORCEMAIN PIPE SHALL BE INSTALLED WITH BELL END OF THE PIPE AT THE UPSTREAM SIDE OF FLOW OR AT THE END IN WHICH THE FIRST RECEIVES THE FLOW.
25. ALL FORCEMAIN SHALL BE HYDROSTATICALLY TESTED. THE FORCEMAIN TEST SECTION SHALL BE SLOWLY FILLED WITH WATER AND PRESSURIZED TO A TEST PRESSURE 50 HIGHER THAN NORMAL OPERATING PRESSURE. THE TEST DURATION SHALL BE A MINIMUM OF TWO (2) HOURS. SUITABLE MEANS SHALL BE PROVIDED BY THE CONTRACTOR FOR DETERMINING WATER LOST BY LEAKAGE UNDER THE TEST PRESSURE. NO PIPE INSTALLATION WILL BE ACCEPTED UNTIL OR UNLESS THIS LEAKAGE IS LESS THEN TEN (10) GALLONS PER INCH OF PIPE DIAMETER PER MILE OF PIPE PER DAY, AT THE DESIGNATED TEST PRESSURE.
26. THE CITY OF FRANKLIN SHALL BE NOTIFIED IN ADVANCED OF ALL SANITARY SEWER TESTING.

G. EROSION PROTECTION DURING CONSTRUCTION
1. THE CONTRACTOR SHALL PROVIDE ADEQUATE EROSION PROTECTION MEASURES DURING AND AFTER CONSTRUCTION SUCH AS BUT NOT LIMITED TO:
   a. SILTATION BASINS
   b. SILT TRAPS
   c. STRAW BALE DAMS
   d. SOIL CEMENT
   e. MULCH AND SEEDING
   f. SOIL STABILIZATION FABRIC
   g. JUTE NETTING
2. SPECIFIC EROSION CONTROL MEASURES SHALL BE IMPLEMENTED AND INSTALLED PER THE EROSION CONTROL PLAN INCLUDED IN THESE CONSTRUCTION PLANS.
3. DETAILS AND PLACEMENT SPECIFICATIONS FOR THE ABOVE ITEMS ARE AVAILABLE ON REQUEST FROM THE ENGINEER.
4. ALL EROSION CONTROL PRACTICES SHALL BE IN ACCORDANCE WITH THE INDIANA STORM WATER QUALITY MANUAL DATED OCTOBER 2007 BY THE INDIANA DEPARTMENT OF ENVIRONMENTAL MANAGEMENT (IDEM).

H. STORM SEWER CONNECTION
1. STORM SEWER STRUCTURES SHALL COMPLY WITH CURRENT SPECIFICATIONS OF THE CITY OF FRANKLIN PLANNING AND HIGHWAY DEPARTMENTS ALL OTHER RESPONSIBLE AGENCIES IN RESPECT TO DESIGN AND QUALITY OF CONSTRUCTION.
2. ALL STORM SEWER CONSTRUCTION INSIDE PUBLIC RIGHT-OF-WAY, EITHER EXISTING OR TO BE DEDICATED, SHALL BE IN ACCORDANCE WITH CURRENT I.N.D.O.T. STANDARD SPECIFICATIONS
3. WHERE REINFORCED CONCRETE PIPE IS SHOWN ON THE CONSTRUCTION PLANS, IT SHALL BE IN ACCORDANCE WITH A.S.T.M. C-76 CLASS III WALL "C" UNLESS OTHERWISE SPECIFIED ON THE PLANS.
4. MANHOLES, CATCH BASINS AND INLETS SHALL BE PRECAST CONCRETE. USE OF BRICK OR BLOCK WILL NOT BE PERMITTED UNLESS AUTHORIZED IN WRITING BY THE ENGINEER AND APPROVED IN WRITING BY THE CITY OF FRANKLIN PLANNING AND HIGHWAY DEPARTMENTS DRAINAGE SECTION PRIOR TO CONSTRUCTION.
   a. IF THE CONTRACTOR ELECTS TO USE ALTERNATE PRECAST STRUCTURES, HE SHALL SUBMIT SHOP DRAWINGS TO THE ENGINEER PRIOR TO ANY CONSTRUCTION.
5. PRECAST CONCRETE AND STEEL FOR MANHOLES AND INLETS SHALL BE IN ACCORDANCE WITH A.S.T.M. C-478.
6. CASTINGS SHALL BE AS SHOWN ON THE DETAIL SHEET(S) FOR MANUFACTURER, TYPE AND MODEL NUMBER.
7. NUMBER 53 STONE BACKFILL SHALL BE REQUIRED UNDER ALL PAVEMENT AREAS AND TRENCHES WITHIN FIVE(5) FEET OF THE EDGE OF PAVEMENT.
8. ALL TRENCHES UNDER PAVEMENT SHALL BE COMPACTED TO 95 PERCENT MODIFIED PROCTOR.

I. UTILITIES
1. WATER SERVICE
   a. ALL MAIN WATER LINES SHALL BE DESIGNED AND INSTALLED IN ACCORDANCE WITH THE INDIANA-AMERICAN WATER COMPANY (UTILITY DEPT.) AND COORDINATION OF CONSTRUCTION OF THESE MAINS SHALL BE THE RESPONSIBILITY OF THE CONTRACTOR AND SHALL BE COORDINATED PRIOR TO STARTING ANY CONSTRUCTION.
   b. INSTALLATION AND MATERIALS FOR ALL WATER MAIN CONSTRUCTION SHALL MEET CITY OF FRANKLIN UTILITIES AND INDIANA STATE BOARD OF HEALTH SPECIFICATIONS.
   c. SEE SANITARY SEWER (F-9a & F9-b) FOR VERTICAL AND HORIZONTAL SEPARATIONS.
   d. GRANULAR BACKFILL (NO.53 STONE) SHALL BE REQUIRED FOR ALL UTILITIES CROSSINGS UNDER AND WITHIN 5 FEET OF PAVEMENT, AREAS AND TRENCHES UNDER PAVEMENT SHALL BE COMPACTED TO 95 PERCENT MODIFIED PROCTOR.
2. ELECTRIC AND TELEPHONE
   a. CONDUIT SHALL BE REQUIRED FOR ALL CROSSINGS UNDER PAVEMENT AREAS.
   b. THE CONTRACTOR SHALL COORDINATE PLACEMENT OF THESE CONDUITS WITH THE POWER AND TELEPHONE COMPANIES PRIOR TO CONSTRUCTION.
   c. GRANULAR BACKFILL (NO.53 STONE) SHALL BE REQUIRED FOR ALL CROSSINGS UNDER PAVEMENT AREAS AND TRENCHES SHALL BE COMPACTED TO 95 PERCENT MODIFIED PROCTOR.
   d. CONCRETE ENCASEMENTS FOR ELECTRIC AND TELEPHONE TRANSFORMERS SHALL BE SET AT THE APPROXIMATE GROUND GRADE AS SHOWN ON THE SITE DEVELOPMENT GRADING PLANS FOR THE RESPECTIVE LOCATIONS.
   e. THE CONTRACTOR SHALL BE RESPONSIBLE FOR COORDINATING WITH EACH UTILITY FOR INSTALLATION OF ANY LINES OR CONDUITS OR ANY OTHER EQUIPMENT REQUIRED IN THE PROJECT. THE UTILITIES SHALL BE NOTIFIED PRIOR TO THE PLACEMENT OF PAVEMENT A MINIMUM OF 72 WORKING DAYS SO THAT THEY MIGHT INSTALL ANY CROSSINGS.

J. GRANULAR BACKFILL
SHALL BE IN ACCORDANCE WITH CURRENT I.N.D.O.T. STANDARD SPECIFICATIONS

K. PAVEMENT CONSTRUCTION
1. ALL STREET CONSTRUCTION SHALL BE IN ACCORDANCE WITH THE PLANS AND SPECIFICATIONS AND CONFORM TO THE MINIMUM STANDARDS OF CITY OF FRANKLIN PLANNING AND HIGHWAY DEPARTMENTS, AND IF THEIR ARE AREAS UNDEFINED USE THE CURRENT I.N.D.O.T. STANDARD SPECIFICATIONS

2. FLEXIBLE PAVEMENT
   a. MATERIALS
      a1. GENERAL: USE LOCALLY AVAILABLE MATERIALS AND GRADATIONS WHICH EXHIBIT A SATISFACTORY RECORD OF PREVIOUS INSTALLATIONS.
      a2. COMPACTED AGGREGATE BASE: SOUND, ANGULAR CRUSHED LIMESTONE, GRAVEL OR UNCRUSHED GRAVEL, OR CRUSHED OR PROCESSED AIR-COOLED BLAST FURNACE SLAG. COURSE AGGREGATE SHALL BE CLASS A, B, C OR D AND CONFORM TO INDIANA DEPARTMENT OF TRANSPORTATION (I.N.D.O.T.) STANDARD SPECIFICATION SECTION 903.
      a3. BASE COURT AGGREGATE: SOUND, ANGULAR CRUSHED STONE, CRUSHED OR UNCRUSHED GRAVEL, OR CRUSHED SLAG, SAND, STONE, OR SLAG SCREENINGS. COARSE AGGREGATES SHALL BE CLASS A OR B AND CONFORM TO I.N.D.O.T. STANDARD SPECIFICATION SECTION 903.
      a4. COARSE AGGREGATE FOR SURFAC