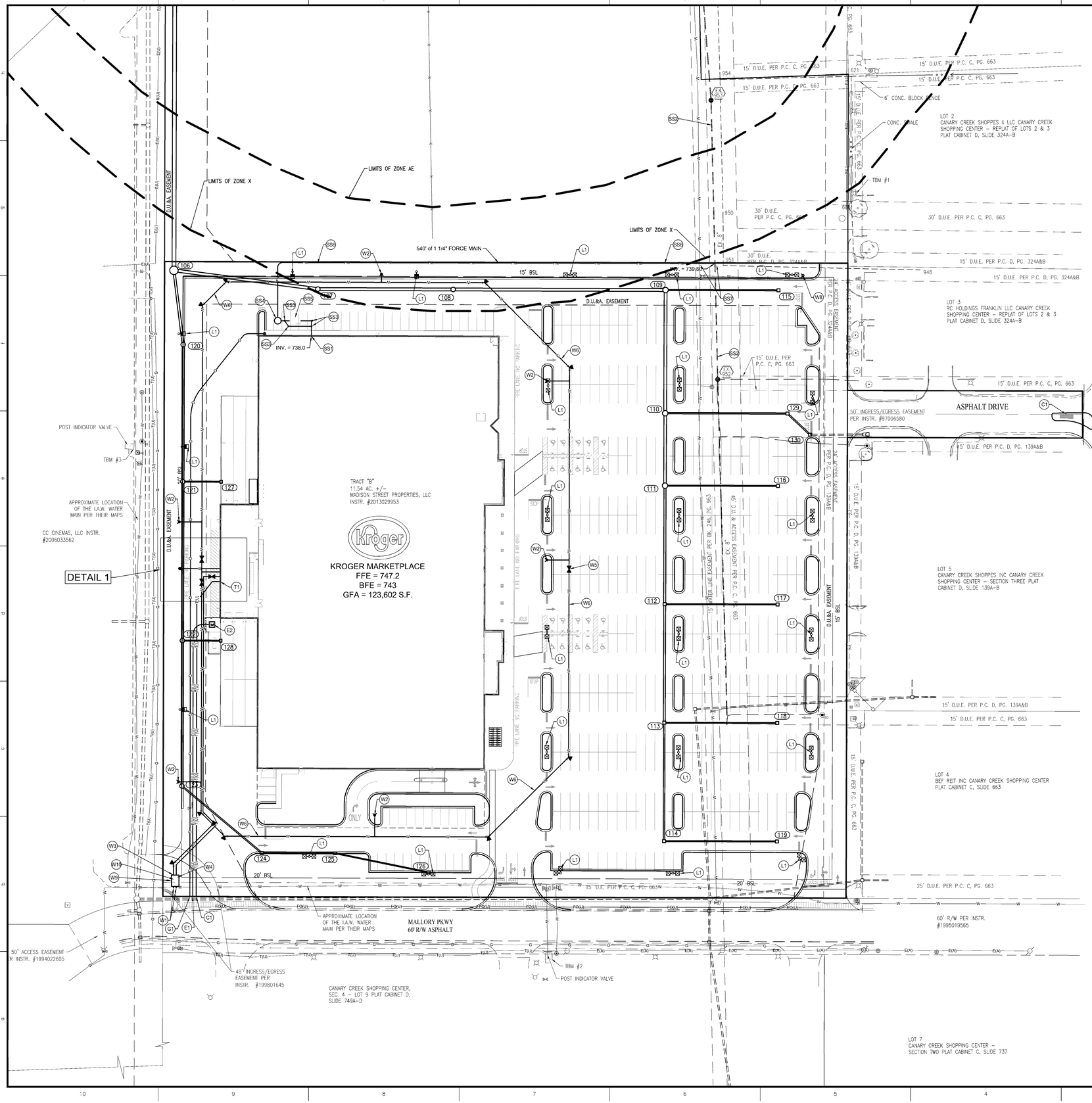

UTILITY PLAN NOTES

SANITARY SEWER NOTES

(SS1) CONNECT PROPOSED SANITARY FORCEMAIN TO THE EXISTING SANITARY MAIN WITH A MANUFACTURED MAINLINE FITTING. THE FORCEMAIN IS TO HAVE TRACER WIRE INSTALLED ON THE TOP OF THE PIPE FROM THE GREASE INTERCEPTOR TO THE SERVICE TAP.

(SS2) EXISTING 8" SANITARY SEWER

(SS3) PROPOSED SANITARY LATERAL CLEANOUT TYPE 1. REFER TO DETAIL ON SHEET C8.04.

(SS4) E-ONE GRINDER PUMP. REFER TO DETAILS ON SHEET C8.02 FOR DESIGN DATA AND PUMP TYPE.

(SS5) GREASE INTERCEPTOR. REFER TO PLUMBING PLANS FOR DETAILS

(SS6) 1 1/4" PVC SDR-17 SANITARY FORCE MAIN

(SS7) PROVIDE 18" MINIMUM VERTICAL CLEARANCE BETWEEN SANITARY/STORM SEWER PIPES AND ALL OTHER PIPES. INSTALL CONCRETE CRADLE IF CLEARANCE IS LESS THAN 18"

WATER SERVICE NOTES

(W1) COORDINATE AND CONNECT THE 3" AND 8" WATER SERVICES SEPARATELY TO THE EXISTING 12" WATER MAIN WITH A TAPPING SLEEVE AND VALVE. THIS MAIN MUST BE TESTED AND ACCEPTED BEFORE THE ONSITE PRIVATE MAIN CAN TAP AND CONNECT FROM THE METER VAULT. CONTACT INDIANA AMERICAN WATER PRIOR TO ANY INSTALLATION.

(W2) PROPOSED FIRE HYDRANT ASSEMBLY

(W3) WATER METER AND ASSOCIATED BACKFLOW PREVENTER, VALVES, ETC. TO BE LOCATED INSIDE THE METER VAULT ALONG MALLORY PARKWAY.

(W4) FIRE DEPARTMENT CONNECTION (6" PVC, C900 D.R.18) TO BE LOCATED ON THE METER VAULT.

(W5) PROPOSED WATER VALVE

(W6) PROPOSED 8" PVC, C900 D.R. 18 FIRE SERVICE LINE

(W7) PROPOSED 3" SDR 21 CLASS 200 DOMESTIC SERVICE LINE

(W8) RELOCATED FIRE HYDRANT PER INDIANA AMERICAN WATER DIRECTION.

(W9) PROVIDE POST INDICATOR VALVE (P.I.V.)

(W10) WATER VAULT PER INDIANA AMERICAN WATER DETAILS AND SPECIFICATIONS

ELECTRIC NOTES

(E1) COORDINATE AND CONNECT BUILDING ELECTRICAL LINE TO ELECTRICAL TRANSFORMER. COORDINATE CONNECTION WITH POWER COMPANY AND ELECTRICAL DRAWINGS. ADJUST AS REQUIRED. 4" EC CONDUITS TO BE INSTALLED WITH PULL STRINGS. 277/480 VOLT SYSTEM, 2000 - 4000 AMPS REQUIRED.

(E2) TRANSFORMER PAD LOCATION. COORDINATE WITH IPL. CONTRACTOR TO COORDINATE WITH BUILDING ELECTRICIAN AND PROVIDE A MINIMUM OF TEN FEET (10') EXTRA LENGTH OF CABLES FOR FINAL CONNECTION

TELEPHONE NOTES

(T1) COORDINATE AND CONNECT BUILDING TELEPHONE SERVICE LINE TO CONNECTION POINT AS PROVIDED. COORDINATE CONNECTION WITH SITE DRAWINGS AND SERVICE PROVIDER. ADJUST AS REQUIRED. TWO (2) 4" PVC CONDUIT TO BE INSTALLED WITH FOUR(4) PULL STRINGS. CONTRACTOR TO PROVIDE #6 GROUND WIRE AT THE D-MARC LOCATION.

GAS SERVICE NOTES

(G1) CONNECT PROPOSED 2" GAS SERVICE TO EXISTING GAS LINE WITH STANDARDIZED PRESSURE OF 1" WATER COLUMN. REFER TO ARCHITECTURAL DRAWINGS AND COORDINATE WITH SERVICE PROVIDER. PROVIDE TRACE WIRE ALONG PATH.

LIGHTING CONDUIT NOTES

(L1) INSTALL SCHEDULE 40 PVC PLASTIC CONDUIT AND TYPE TW WIRE, AND BE LOCATED BELOW ANY PAVING AND AGGREGATE SUBGRADE.

SIGNAGE CONDUIT NOTES

(C1) INSTALL TWO (2) 3/4" PVC CONDUIT SCHEDULE 40 (WITH PULL STRINGS) FROM THE KROGER BUILDING TO THE PYLON SIGN.

LEGEND

FH	EXIST. FIRE HYDRANT
WM	EXIST. WATER METER/VALVE
	EXIST. SIGN
	EXIST. MONITOR WELL
PKF	EXIST. IRON PIN & OR PK (SET/FOUND)
GM	EXIST. GAS METER
	EXIST. GAS VALVE
	EXIST. STORM INLET
	EXIST. STORM/SAN./TELE. MANHOLE
EM	EXIST. ELECTRIC METER
	EXIST. POWER POLE/POWER POLE w/ LIGHT
GA	EXIST. GUY ANCHOR
T./Ped.	EXIST. TELEPHONE PEDESTAL
AC	HVAC UNIT
CO	CLEANOUT
MB	MAILBOX
	LIGHT POLE
BOL	EXIST. BOLLARD
	EXIST. SANITARY SEWER LINE
	EXIST. STORM SEWER LINE
892	EXIST. CONTOURS
	CONCRETE END SECTION (C.E.S.)
GP	GATE POST
	TRANSFORMER
	RIGHT-OF-WAY LINE
	PROPOSED SANITARY SEWER LINE
	PROPOSED STORM SEWER LINE
STM	PROPOSED HDPE ROOF DRAIN
	PROPOSED PIPE BOLLARD
	PROPOSED MANHOLE (MH)
892	PROPOSED CONTOURS
894.50	PROPOSED ELEVATION
	DRAINAGE FLOW ARROW
	EXISTING TREE LINE
	PROPOSED DIRECTIONAL SIGN
F.F.E.	FINISH FLOOR ELEVATION
TC	TOP OF (MANHOLE / INLET) CASTING
INV	INVERT ELEVATION
RCP	REINFORCED CONCRETE PIPE
CMP	CORRUGATED METAL PIPE
PVC	POLYVINYL CHLORIDE PIPE
HDPE	HIGH DENSITY POLYETHYLENE
	FLOW LINE
STR.	STRUCTURE
M.E.G. OR M.E.	MATCH EXISTING GRADE
TOW OR TW	TOP OF WALL
SSD	SUB-SURFACE DRAINAGE
TOC	TOP OF CURB
GUT	GUTTER
W	WATER LINE
G	GAS LINE
OHU	OVERHEAD UTILITY LINE
T	TELEPHONE LINE
E	ELECTRIC LINE
TBM	TEMPORARY BENCHMARK
XX	PARKING COUNT

GENERAL UTILITY NOTES

1. THE CONTRACTOR SHALL CONTACT ALL APPLICABLE UTILITIES AND VERIFY ANY AND ALL FEES ASSOCIATED WITH THE INSTALLATION OF ALL UTILITIES.
2. PROVIDE THRUST BLOCKS FOR ALL WATER LINE BENDS AND TEES, INCLUDING TAP CONNECTION.
3. CONTRACTOR SHALL COORDINATE WITH WATER COMPANY FOR DOMESTIC AND FIRE SERVICE. CONNECT TO BUILDING DOMESTIC AND FIRE LINE. COORDINATE WITH PLUMBING DRAWINGS.
4. COORDINATE LOCATION OF ELECTRICAL AND TELEPHONE LINES WITH LOCAL UTILITIES.
5. COORDINATE LOCATION AND SIZE OF GAS SERVICE CONNECTION AND INSTALLATION OF SERVICE LINE AND METER WITH GAS COMPANY.
6. COORDINATE LOCATIONS AND CONNECTIONS OF BUILDING STORM LINES WITH MECHANICAL DRAWINGS.
7. VERIFY EXISTING INVERT AND LOCATION OF SANITARY SEWER. ADJUST INVERTS AS REQUIRED. DOCUMENT ANY CHANGES.
8. MAINTAIN 10' HORIZONTAL AND 18" VERTICAL CLEARANCE BETWEEN STORM / SANITARY SEWER SYSTEMS AND DOMESTIC/FIRE LINE SERVICE.
9. FOLLOW ALL LOCAL AND STATE CODES IN REFERENCE TO DOMESTIC/FIRE LINE INSTALLATION AND STORM SEWER / SANITARY SEWER INSTALLATION.
10. COORDINATE LOCATION OF REQUIRED CONDUITS FOR LIGHT POLES, TELEPHONE SERVICE AND IRRIGATION SYSTEM (AS APPLICABLE).
11. COORDINATE UTILITY CONDUITS WITH SERVICE PROVIDERS.
12. SANITARY SEWER LATERAL, WATER SERVICE, & ELECTRICAL/TELEPHONE CONDUITS SHALL BE GRANULAR BACKFILL FOR ENTIRE RUN.
13. RUN WATER LINE A MINIMUM OF 54" DEEP. PROVIDE MINIMUM OF 10' HORIZONTAL & 2' VERTICAL CLEARANCE BETWEEN WATER & SANITARY LINE. SANITARY SEWER LINE IN PROXIMITY OF WATER LINE SHALL BE C900 WATER MAIN GRADE PVC.

DEPARTMENT OF PUBLIC WORKS
70 EAST MONROE STREET
FRANKLIN, IN 46131
(317) 736-3631

CITY OF FRANKLIN STANDARD SPECIFICATIONS LATEST EDITION TO BE USED WITH THESE PLANS.

DETAIL 1

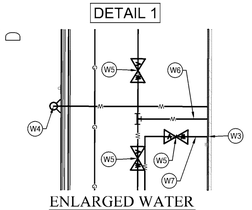

ENLARGED WATER CONNECTION PLAN
SCALE: 1" = 20'

PLAN CERTIFICATE NOTE:

ORIGINAL ALTA, TOPOGRAPHY, UTILITIES, STORM SEWERS, AND ALL OTHER EXISTING CONDITIONS ITEMS WERE PREPARED BY BANNING ENGINEERING.

FINAL DRAWINGS FOR THE KROGER SITE WERE PREPARED BY WEIHE ENGINEERS, INC. AND JAMES K. SHINNEMAN. FINAL CONSTRUCTION PLANS ARE THOSE PLANS CONTAINING A FINAL REVISION DATE AFTER 02/12/2015. WEIHE ENGINEERS, INC. AND JAMES K. SHINNEMAN ACCEPT RESPONSIBILITY ONLY FOR THE KROGER SITE IMPROVEMENTS RELATED TO THE ENGINEERING WORK SHOWN ON THESE PLANS.

SCALE: 1" = 50
0 25 50 100

811 Know what's below. Call before you dig.
Within Indiana Call 811 or 800-382-5544
24 Hours a Day, 7 Days a Week.
PER INDIANA STATE LAW IC 8-1-26, IT IS AGAINST THE LAW TO EXCAVATE WITHOUT NOTIFYING THE UNDERGROUND LOCATION SERVICE TWO (2) WORKING DAYS BEFORE COMMENCING WORK.

WEIHE ENGINEERS
Land Surveying | Civil Engineering
Landscape Architecture
10505 N. College Avenue
Indianapolis, Indiana 46280
weihe.net
317 846 - 6611
800 452 - 6408
317 843 - 0546 fax
ALLAN H. WEIHE, P.E., L.S. - FOUNDER

REVISIONS AND ISSUES	DATE	BY
SUBMITTED FOR INITIAL REVIEW	02.12.2015	BJS

PROJECT NO.: W14.0460
DWG NAME: x140460-C800 utl.dwg
DESIGNED BY: RJW/BAM
DRAWN BY: RJW/BAM
CHECKED BY: JKS
DATE: 02.12.2015

JAMES K. SHINNEMAN P.E. 10200392

PREPARED FOR: KROGER STORE J-979

KROGER MARKETPLACE - MALLORY PARKWAY AND U.S. 31

UTILITY PLAN

Part of the NE/4 of Section 15, Township 12 North, Range 4 East, Franklin Township, Johnson County, Indiana

SHEET NO.
C8.01

PROJECT NO.
W14.0460

LOCATION: I:\2014\W14046\0\Engineering\Design\Xconsist\w140460- C800 utl.dwg
LAYOUT: C8.01
DATE/TIME: February 12, 2015 - 7:34am
PLOTTED BY: schloefle

UTILITY TRENCH AND BEDDING
(NO SCALE)

PIPE DIA.	W
≤12"	O.D. OF PIPE + (12" TO 18")
>12"	≥ O.D. OF PIPE + 18"

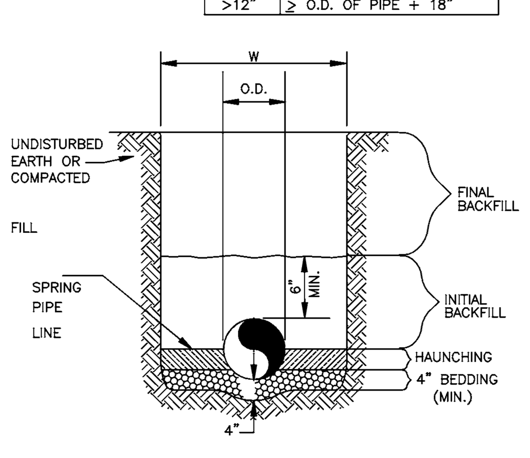

WATER LINE
(NO SCALE)

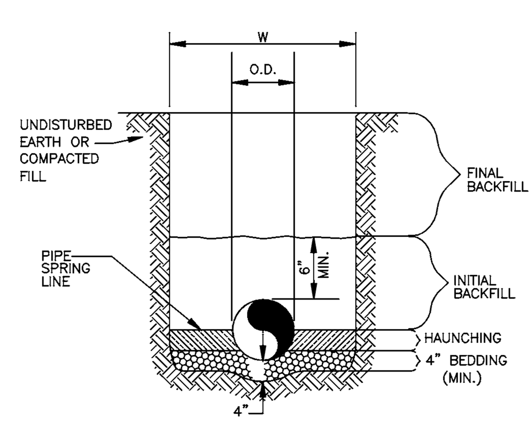

SANITARY SEWER
(NO SCALE)

GENERAL NOTES

1. BEDDING SHALL BE CLASS I–A WORKED BY HAND. IF GROUNDWATER IS ANTICIPATED, THEN BEDDING SHALL BE CLASS I–B COMPACTED TO 85% STANDARD PROCTOR.
2. HAUNCHING SHALL BE WORKED AROUND THE PIPE BY HAND TO ELIMINATE VOIDS AND SHALL BE CLASS I–A OR CLASS I–B OR CLASS II COMPACTED TO 85% PROCTOR.
3. INITIAL BACKFILL SHALL BE CLASS I–A WORKED BY HAND, OR CLASS I–B OR CLASS II COMPACTED TO 85% STANDARD PROCTOR.
4. INITIAL BACKFILL NOT UNDER PAVED AREAS CAN BE CLASS III COMPACTED TO 90% STANDARD PROCTOR.
5. FINAL BACKFILL SHALL BE CLASS I, II, OR III COMPACTED AS NOTED IN NOTES 3. AND 4.
6. FINAL BACKFILL NOT UNDER PAVED AREAS CAN BE CLASS IV–A COMPACTED TO 95% STANDARD PROCTOR.
7. ALL MATERIALS ARE CLASSIFIED IN ACCORDANCE WITH ASTM D 2321–89.
8. ALL MATERIALS SHALL BE INSTALLED IN MAXIMUM 8" LOOSE LIFTS IN ACCORDANCE WITH ASTM D 698. CLASS III AND IV–A MATERIALS SHALL BE COMPACTED NEAR OPTIMUM MOISTURE CONTENT.
9. FILL SALVAGED FROM EXCAVATION SHALL BE FREE OF DEBRIS, ORGANICS AND ROCKS LARGER THAN 3".
10. ALL TRENCH EXCAVATIONS SHALL BE SLOPED, SHORED, SHEETED, BRACED, OR OTHERWISE SUPPORTED IN COMPLIANCE WITH OSHA REGULATIONS AND LOCAL ORDINANCES. (SEE SPECIFICATIONS)

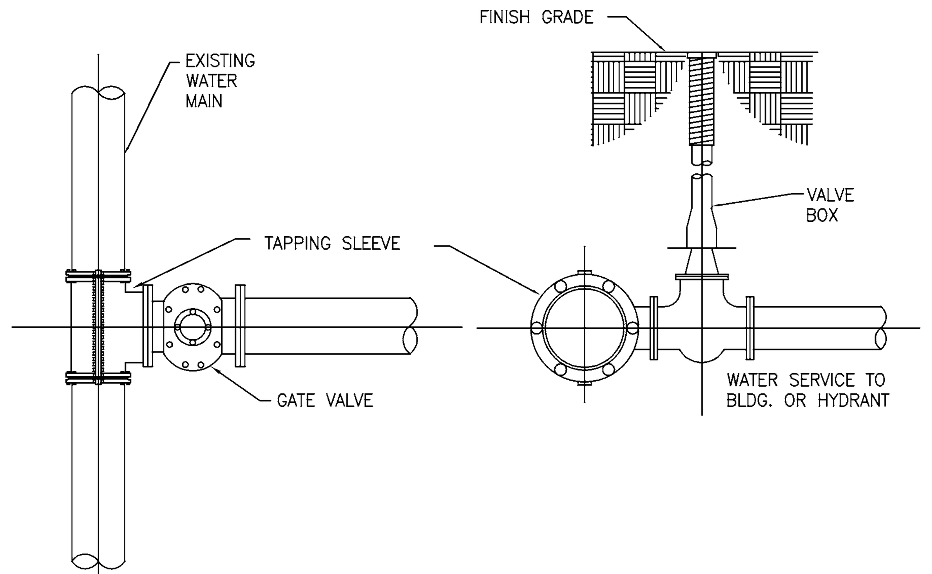

WATER MAIN CONNECTION DETAIL
(NO SCALE)

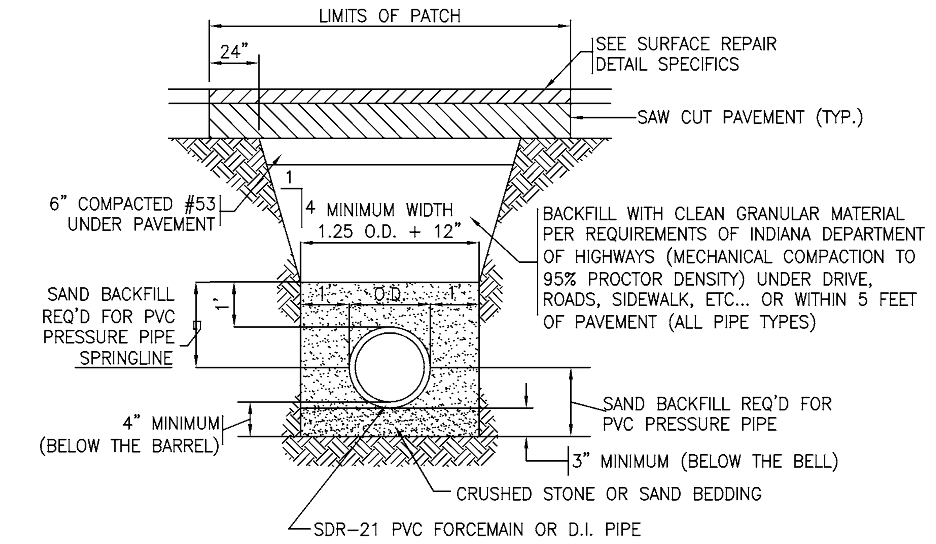

NOTE:
1. BITUMINOUS PAVEMENT TACK COAT SHALL BE PLACED BETWEEN THE SUBSURFACE AND ALONG THE SAW CUTS.
2. TRENCH WIDTHS AND BACKFILL REQUIREMENTS SHALL BE IN CONFORMANCE WITH MANUFACTURER'S RECOMMENDATIONS.

TYPICAL WATERMAIN TRENCH DETAIL
(NO SCALE)

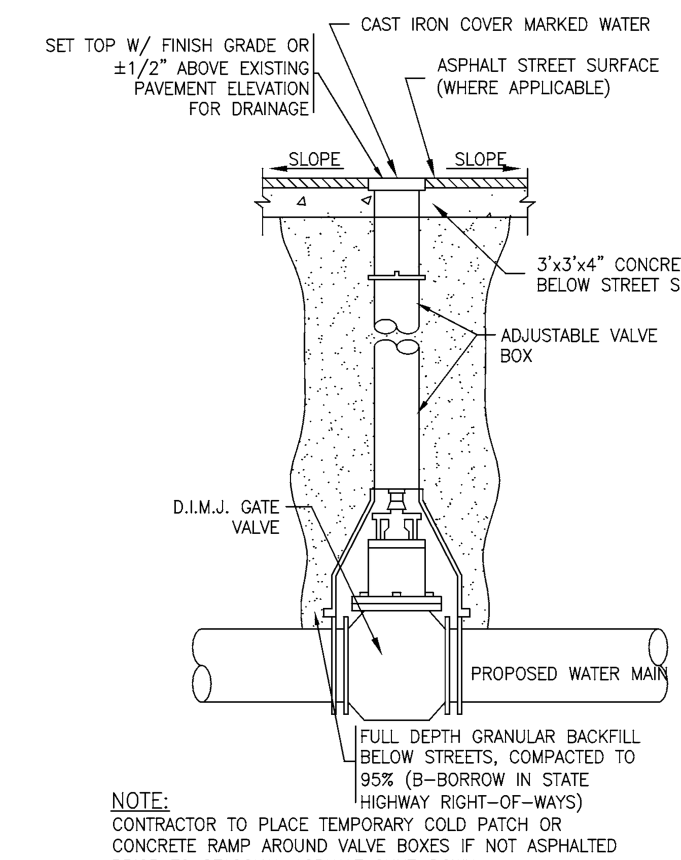

NOTE:
CONTRACTOR TO PLACE TEMPORARY COLD PATCH OR CONCRETE RAMP AROUND VALVE BOXES IF NOT ASPHALTED PRIOR TO SEASONAL ASPHALT SHUT–DOWN

GATE VALVE AND BOX DETAIL
(NO SCALE)

WATER MAIN SHALL NOT BE LOCATED IN THE SAME TRENCH AS SANITARY SEWERS.

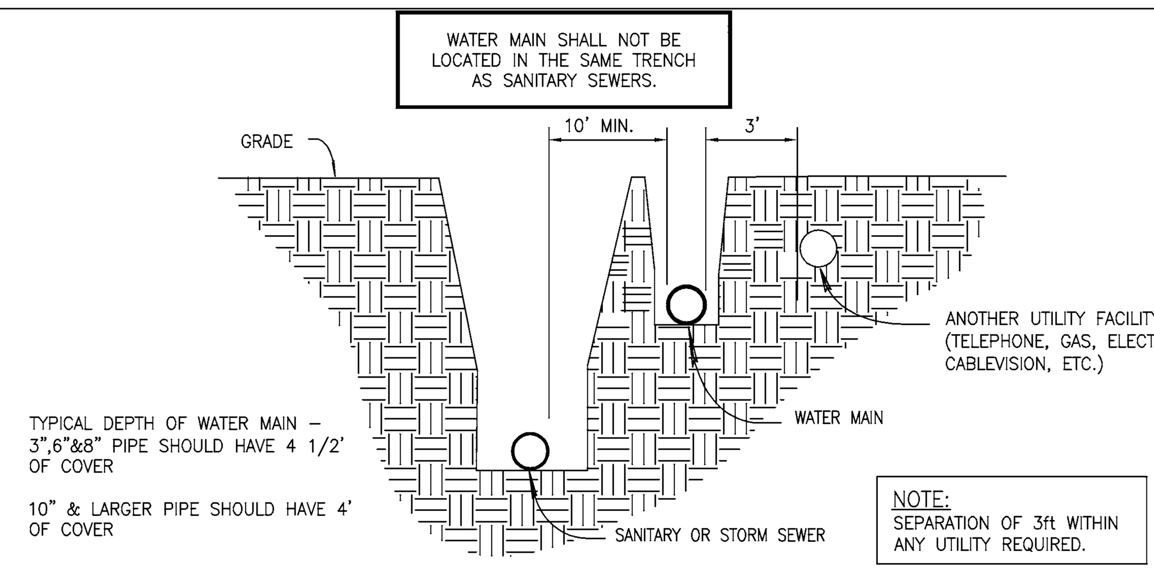

TYPICAL DEPTH OF WATER MAIN – 3",6"&8" PIPE SHOULD HAVE 4 1/2' OF COVER

10" & LARGER PIPE SHOULD HAVE 4' OF COVER

NOTE:
SEPARATION OF 3ft WITHIN ANY UTILITY REQUIRED.

WATER MAIN LYING PARALLEL TO SEWER

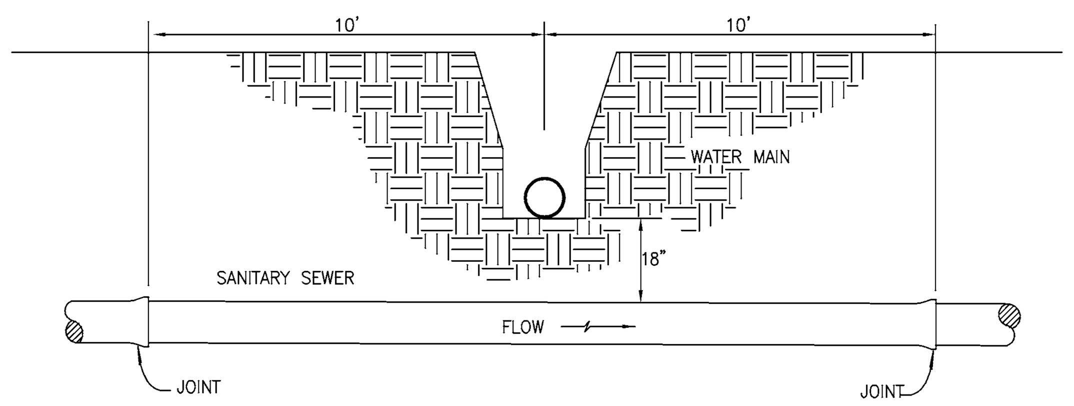

WATER MAIN CROSSING SEWER

WATER & SEWER DETAIL
(NO SCALE)

NOTE:
1. ALL HYDRANTS TO BE SET PLUMB W/ NOZZLE FACING STREET UNLESS OTHERWISE SPECIFIED BY FIRE DEPARTMENT
2. ALL CONCRETE TO BE 2500 PSI P.C. CONCRETE
3. FIRE HYDRANT ASSEMBLY INCLUDES GATE VALVE AND APPURTENANCES

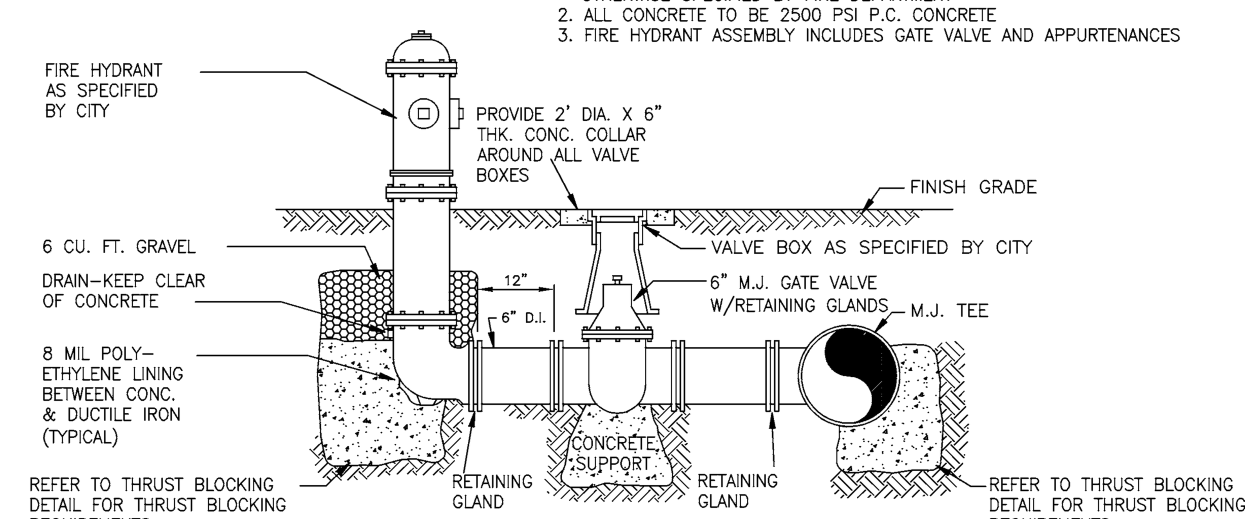

FIRE HYDRANT ASSEMBLY
(NO SCALE)

NOTE:
LATERAL CONNECTION TO CLEANOUT STRUCTURE TO BE WITHIN 3.0' (THREE FEET) OF THE FOUNDATION WALL.

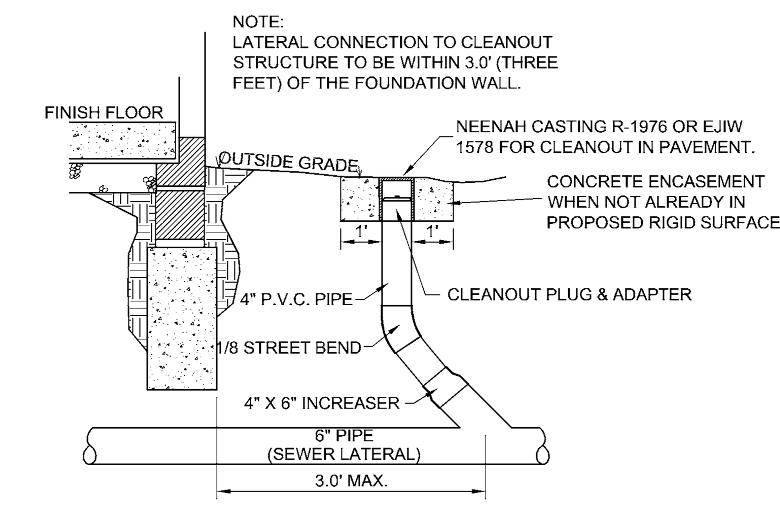

TYPICAL CLEANOUT SECTION
TYPE I (NO SCALE)

NOTE:
ALL BEDDING & INITIAL BACKFILL SHALL BE INSTALLED IN 6" TO 12" BALANCED LIFTS A MIN. 9" CLEARANCE SHALL BE PROVIDED ON EACH SIDE OF THE INSTALLED PIPE

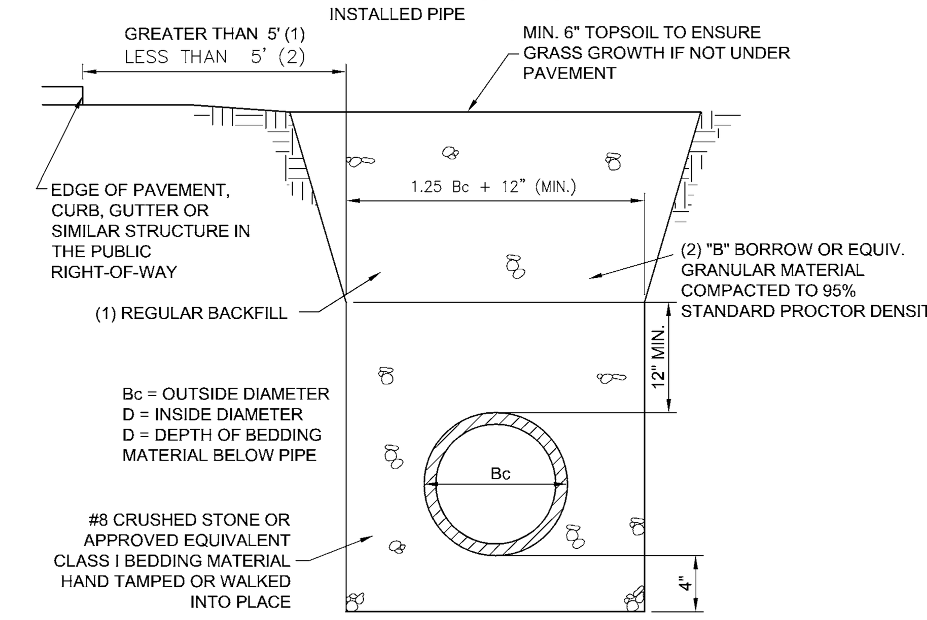

TYPICAL BEDDING SECTION - PVC & HDPE
(NO SCALE)

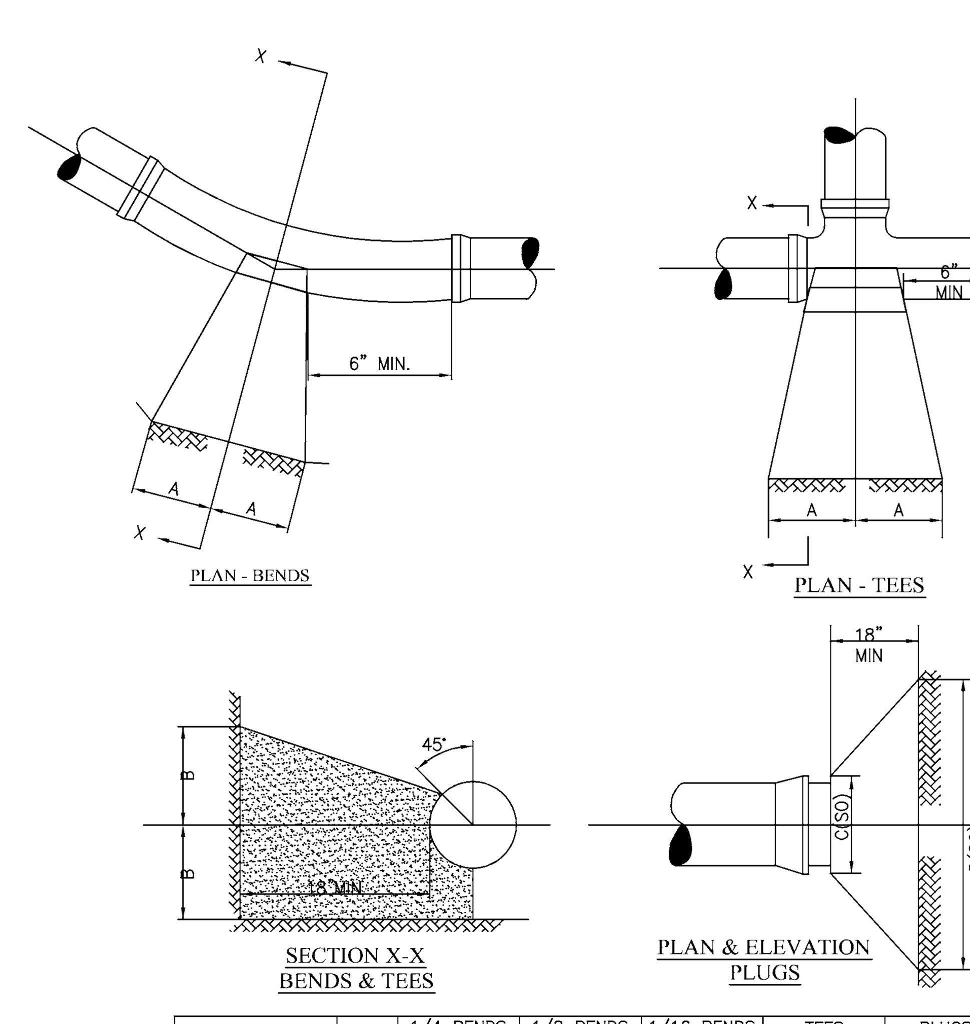

TYPE	SIZE	1/4 BENDS A	1/4 BENDS B	1/8 BENDS A	1/8 BENDS B	1/16 BENDS A	1/16 BENDS B	TEES A	TEES B	PLUGS C	PLUGS D
TYPE I 4000 PSF SOIL	6"	6"	10"	6"	8"	3"	8"	8"	8"	10"	15"
	8"	12"	12"	8"	10"	5"	9"	9"	12"	12"	20"
TYPE II 2000 PSF SOIL	6"	16"	10"	9"	10"	6"	8"	10"	12"	10"	20"
	8"	22"	13"	12"	13"	8"	10"	13"	16"	12"	29"

NOTE:
BASED ON 100 PSI STATIC PRESSURE PLUS A W W A WATER HAMMER CONCRETE TO BE CAST AGAINST UNDISTURBED BEARING SURFACE

THRUST BLOCKS FOR WATER MAINS
(NO SCALE)

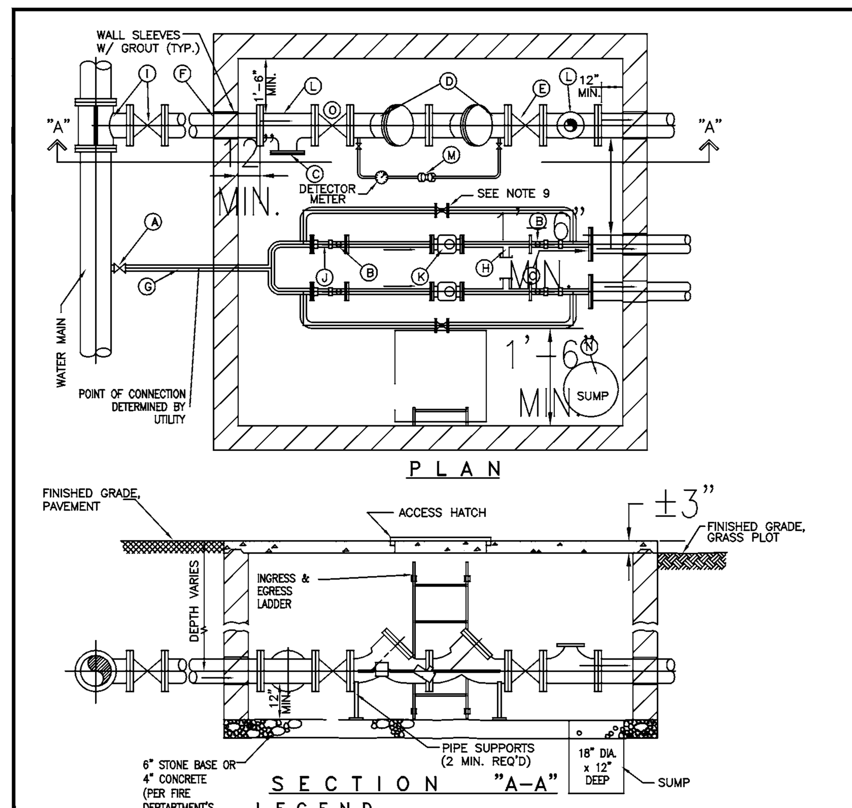

LEGEND

- (A) CORPORATION STOP
- (B) BALL VALVE W/ FLANGED END (SEE NOTE 9)
- (C) REDUCING FLANGE
- (D) DOUBLE CHECK DETECTOR ASSEMBLY
- (E) FLANGED OS & Y VALVE
- (F) FIRE LINE
- (G) DOMESTIC SERVICE (SEE NOTE 9)
- (H) 2" TEST PLUG (SEE NOTE 9)
- (I) TAPPING SLEEVE W/ TAPPING VALVE & BOX (COORDINATE WITH LOCAL UTILITY SUPERINTENDENT/MANAGER)
- (J) LOK–PAK
- (K) DOMESTIC SERVICE METER (SEE NOTE 9)
- (L) FLANGED TEE
- (M) DOUBLE CHECK DETECTOR ASSEMBLY
- (N) SUMP FOR TEMPORARY PUMP
- (O) FLANGED GATE VALVE WITH PIT TYPE POST INDICATOR

NOTES:

1. CUSTOMER SHALL FURNISH & INSTALL VAULT, INCLUDING ALL APPERTENCES EXCEPT AS NOTED BELOW.
2. VAULT CONSTRUCTION MATERIALS SHALL BE 8"x8"x16" CMU, OR PRECAST, OR CAST–IN–PLACE CONCRETE AT CUSTOMER'S SELECTION.
3. INSIDE DIMENSIONS PER DRAWING NOTES. VAULT TO BE SET LENGTHWISE WITH SERVICE.
4. TOP OF VAULT TO BE CONCRETE, AT LEAST 4" THICK WITH REINFORCING SUITABLE FOR ANTICIPATED LOADING. WHEN VAULT IS CONSTRUCTED IN PAVED AREAS, PAVEMENT IS TO BE LEVEL WITH TOP OF VAULT, AND THE TOP REINFORCED AS REQUIRED TO SUPPORT TRAFFIC LOADS (i.e. H–20 WHEEL LOADS). WHEN VAULT IS CONSTRUCTED IN GRASS PLOT, TOP OF VAULT SHALL BE 3" ABOVE FINISHED GRADE.
5. BOTTOM OF VAULT TO BE EITHER A MINIMUM OF 6" OF CRUSHED STONE OR 4" CONCRETE PER FIRE DEPARTMENT'S REQUIREMENT. MINIMUM CLEARANCE OF 12" BELOW BOTTOM OF FIRE SERVICE AND DOMESTIC SERVICE LINES IS REQUIRED.
6. DOUBLE CHECK DETECTOR ASSEMBLY SHALL BE A MODEL APPROVED BY THE INDIANA DEPARTMENT OF ENVIRONMENTAL MANAGEMENT, WITH RESILIENT SEAT GATE VALVE ON INLET & OUTLET SIDES. DETECTOR METER IS FURNISHED BY UTILITY AND INSTALLED BY CUSTOMER.
7. ACCESS HATCH IN TOP OF VAULT SHALL BE 30"x30" ALUMINUM BILCO J–2AL, BILCO PCM–2, HALLIDAY W1S3030 OR EQUAL. ACCESS HATCH SHALL HAVE SAME OR GREATER LOADING CAPACITY AS VAULT LID. PIPE HATCH FRAME DRAIN TO VAULT FLOOR OR SUMP, AS APPLICABLE.
8. LADDER FOR VAULT INGRESS AND EGRESS SHALL BE PER OSHA REQUIREMENTS. LADDER MATERIAL SHALL BE ALUMINUM OR FIBERGLASS AND INCLUDE A BILCO "LADDER–UP" SAFETY DEVICE OR EQUAL.
9. A COMBINATION VAULT CAN BE USED AT THE DISCRETION OF THE UTILITY.
   a. UTILITY WILL FURNISH AND INSTALL DOMESTIC SERVICE FROM TAP THROUGH METER. METER SIZING IS SELECTED BY UTILITY.
   b. CUSTOMER SHALL FURNISH BALL VALVES ON OUTLET SIDE OF THE DOMESTIC METER SETTING.
   c. BY–PASS W/LOCK VALVE MAY BE INSTALLED BY CUSTOMER UPON UTILITY'S APPROVAL.
   d. A 2" TEST PLUG SHALL BE INSTALLED AT LEAST 2 PIPE DIAMETERS DOWNSTREAM OF 2" OR LARGER METERS.

Indiana American Water — RWE GROUP

SCALE: NO SCALE	DETAILS
REVISIONS	STANDARD FOR COMBINED FIRE SERVICE & METER VAULT FOR SINGLE METER CONFIGURATION
R.K.B. MOVED PIV; R.K.B. 5/2004 REV. TITLE BLOCK	DRAWN BY: R.K.B. DATE: 1/2004 CHECKED: ADS APPROVED: ADS – 5/12/04 — 1 of 1

METER VAULT DETAIL
NOT TO SCALE

** COORDINATE DETAILS OF THE VAULT WITH IAW
** PIV AND FDC TO BE LOCATED ON THE BUILDING FACADE
*** MODIFIED TO SHOW SEWERED AND UNSEWERED METER

INDIANA AMERICAN WATER ASBUILT REQUIREMENTS:

1) CONTRACTOR IS AWARE OF THE REQUIREMENTS SET FORTH BY THE LOCAL REPRESENTATIVE OF IAW AND THE MEANS OF THE INDIANA AMERICAN WATER COMPANY, INC. DEVELOPER PACKET FOR WATER MAIN EXTENSIONS FOR ALL ITEMS TO BE FULFILLED PRIOR TO GETTING WATER SERVICE TURNED ON FOR THE STORE.

CONTACT PERSON:
TROY BRYANT
425 WEST MAIN STREET
MOORESVILLE, IN 46158
317.831.3385 EXT. 2

2) CONTRACTOR TO HAVE THE WATER MAIN EXTENSION AND ALL APPURTENANCES ASSOCIATED WITH SERVICE TO BE COORDINATED WITH WEIHE ENGINEERS,INC. FOR SURVEYING DURING INSTALLATION TO PREPARE ASBUILT DRAWING AND CERTIFICATION TO IAW PRIOR TO GETTING WATER SERVICE TURNED ON FOR THE STORE.

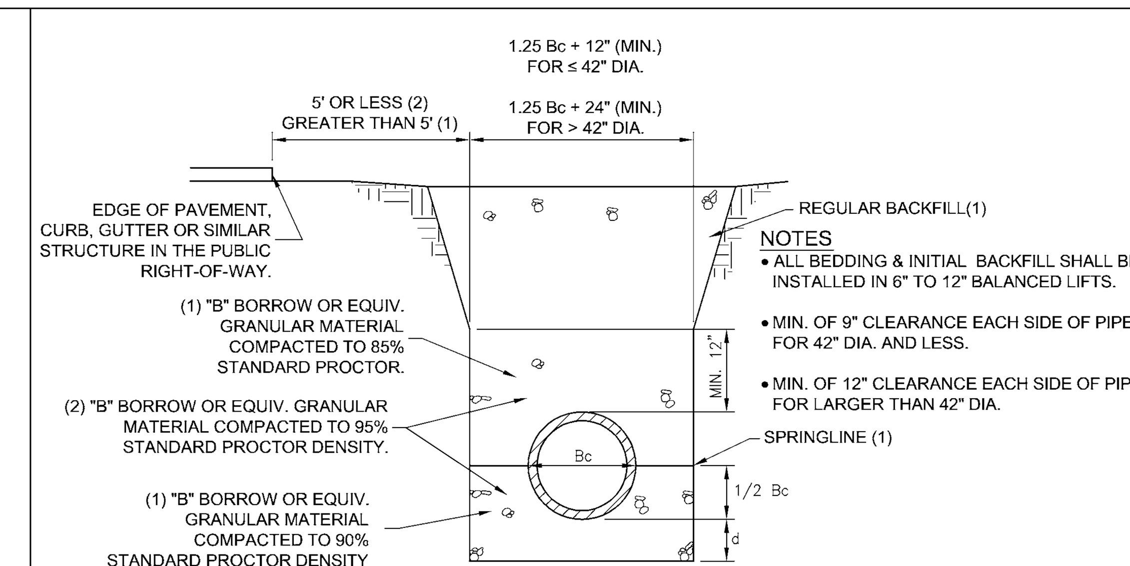

NOTES
- ALL BEDDING & INITIAL BACKFILL SHALL BE INSTALLED IN 6" TO 12" BALANCED LIFTS.
- MIN. OF 9" CLEARANCE EACH SIDE OF PIPE FOR 42" DIA. AND LESS.
- MIN. OF 12" CLEARANCE EACH SIDE OF PIPE FOR LARGER THAN 42" DIA.

D	d(MIN.)
27" & SMALLER	3
30" TO 60"	4
66" & LARGER	6

Bc= OUTSIDE DIAMETER
D = INSIDE DIAMETER
d = DEPTH OF BEDDING MATERIAL BELOW PIPE

TYP. BEDDING SECTION - CMP
(NO SCALE)

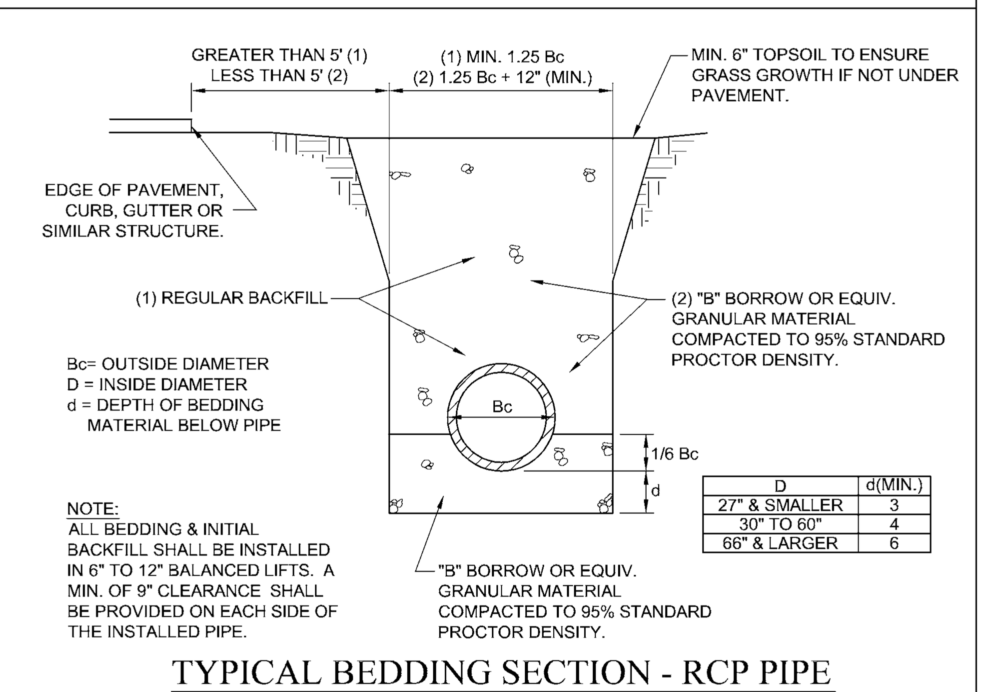

Bc= OUTSIDE DIAMETER
D = INSIDE DIAMETER
d = DEPTH OF BEDDING MATERIAL BELOW PIPE

D	d(MIN.)
27" & SMALLER	3
30" TO 60"	4
66" & LARGER	6

NOTE:
ALL BEDDING & INITIAL BACKFILL SHALL BE INSTALLED IN 6" TO 12" BALANCED LIFTS. A MIN. OF 9" CLEARANCE SHALL BE PROVIDED ON EACH SIDE OF THE INSTALLED PIPE.

TYPICAL BEDDING SECTION - RCP PIPE
(NO SCALE)

NOTE: TO BE USED WHEN CLEAR DISTANCE (FROM EXTERIOR PIPE DIAMETER TO EXTERIOR PIPE DIAMETER) BETWEEN SANITARY SEWER PIPING (MAINS, LATERALS, FORCE MAINS, ETC.) AND ALL OTHER PIPES IS 18" OR LESS, PER INSPECTOR'S DIRECTION, OR WHERE NOTED ON THE DRAWINGS. A MINIMUM CLEAR DISTANCE OF 3" MUST BE PROVIDED TO MAINTAIN STRUCTURAL INTEGRITY OF THE CONCRETE.

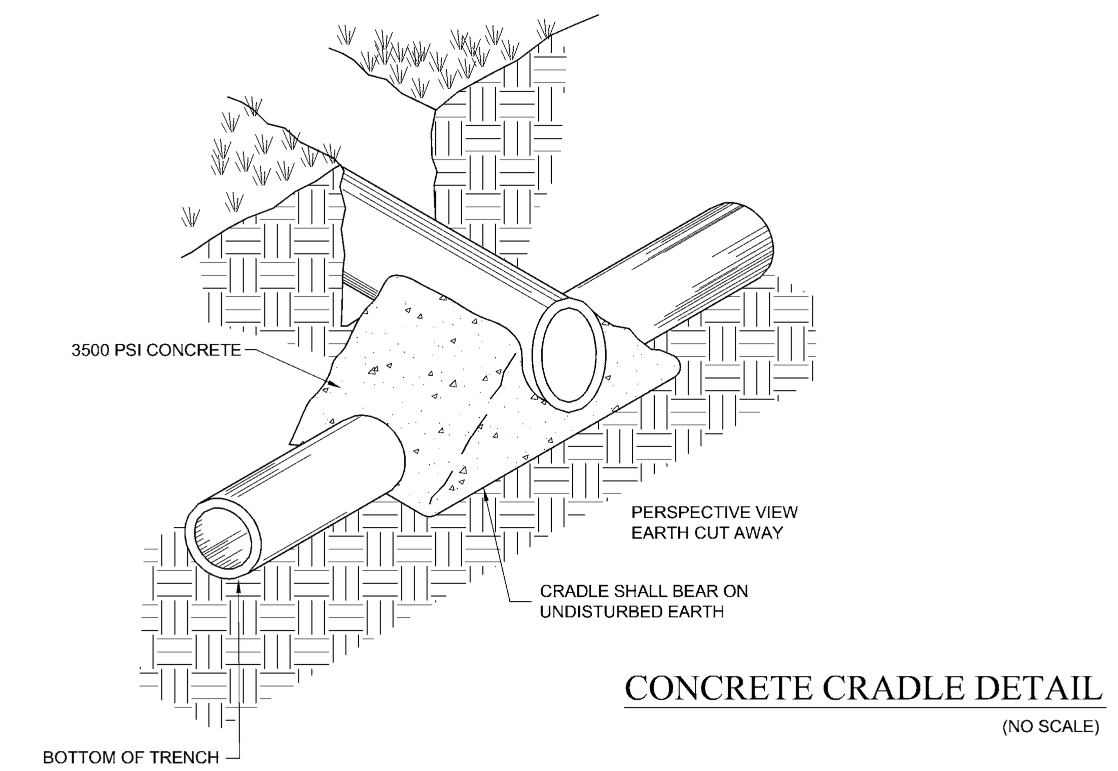

CONCRETE CRADLE DETAIL
(NO SCALE)

10505 N. College Avenue
Indianapolis, Indiana 46280
weihe.net
317 | 846 - 6611
800 | 452 - 6408
317 | 843 - 0546 fax
ALLAN H. WEIHE, P.E., L.S. - FOUNDER

WEIHE ENGINEERS
Land Surveying | Civil Engineering
Landscape Architecture

PROJECT NO.: W14.0460
DWG NAME: w140460-C800 util det.dwg
DESIGNED BY: RLW/RAM
DRAWN BY: RLW/RAM
CHECKED BY: JKS
DATE: 02.12.2015

DATE	BY	REVISIONS AND ISSUES
02.12.2015	BJS	SUBMITTED FOR INITIAL REVIEW

JAMES K. SHINNEMAN REGISTERED No. 10200392 STATE OF INDIANA PROFESSIONAL ENGINEER — APPROVAL PENDING NOT FOR CONSTRUCTION

JAMES K. SHINNEMAN P.E. 10200392

PREPARED FOR:
KROGER STORE J-979
KROGER MARKETPLACE - MALLORY PARKWAY AND U.S. 31
UTILITY DETAILS
Part of the NE/4 of Section 15, Township 12 North, Range 4 East, Franklin Township, Johnson County, Indiana

SHEET NO.
C8.02
PROJECT NO.
W14.0460

LOCATION: H:\2014\W140460\Engineering\design\conset\w140460-C800 util det.dwg
LAYOUT: C8.02
DATE/TIME: February 12, 2015 – 7:35am
PLOTTED BY: schoeffb

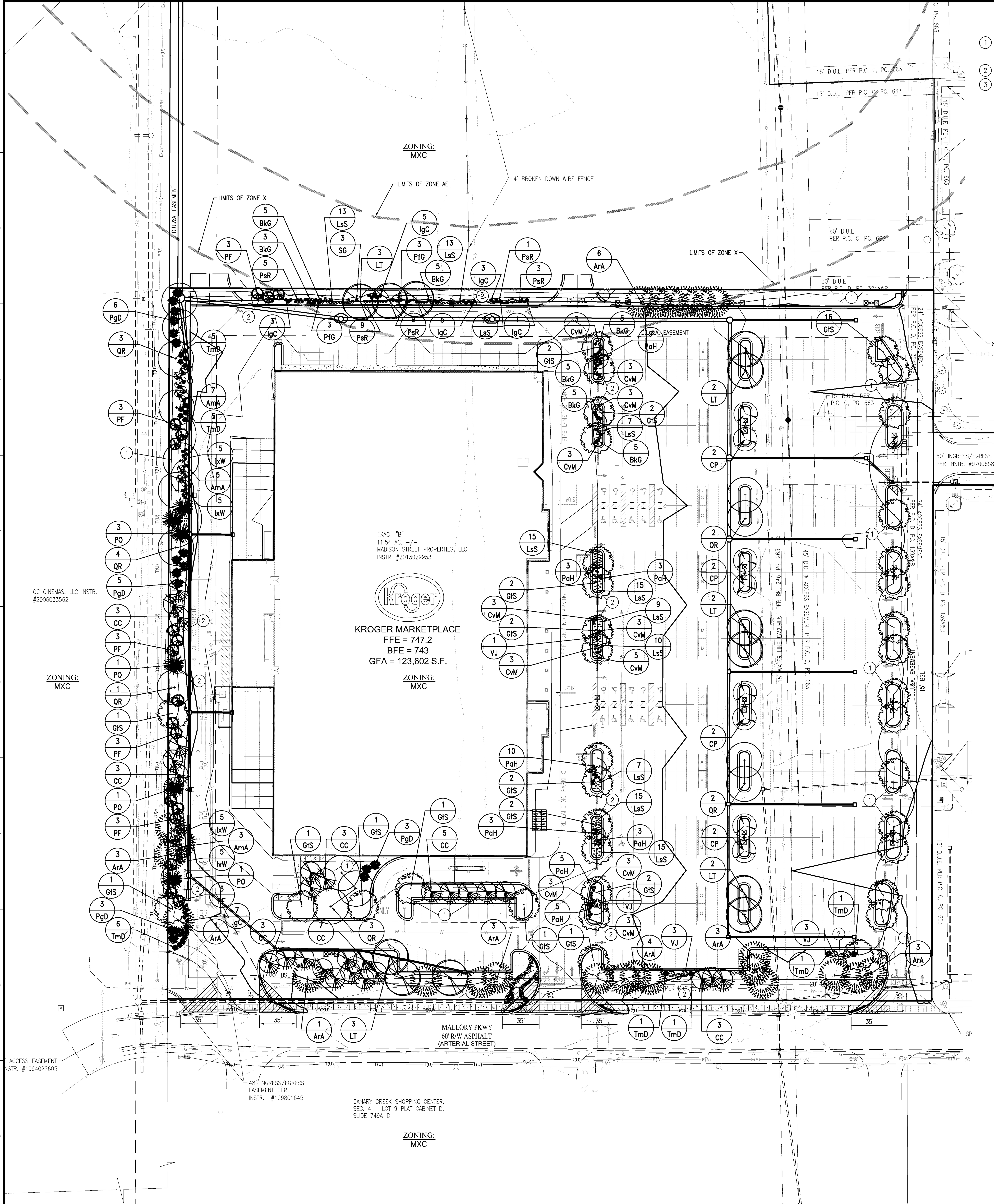

LANDSCAPE PLAN NOTES

1. SOD (ALTERNATE)- ALL SOD SHALL BE CERTIFIED GRADE CULTIVATED GRASS SOD: OF "ADVENTURE BLEND" TURF TYPE TALL FESCUE (BY GENERAL CONTRACTOR)
2. MULCH
3. REPLACE ALL DAMAGED AND REMOVED STREET TREES ASSOCIATED WITH THE STORM SEWER OUTFALL SCOPE OF WORK. THESE 3 TREES SHOWN ARE EXCLUDED FROM THE PLANTING SCHEDULE IN CASE THEY CAN BE PRESERVED IN PLACE.

LEGEND

SITE TRIANGLE

- 35' DISTANCE FOR ARTERIAL STREETS
- 10' DISTANCE FOR PRIVATE ENTRANCES

GENERAL NOTES

1. IN CASE OF DISCREPANCIES BETWEEN THE PLAN AND THE PLANT LIST, THE PLAN SHALL DICTATE. IF IN QUESTION, CONTACT THE LANDSCAPE DESIGNER.
2. ALL SHRUBS PLANTING AREAS TO BE COVERED WITH 4" THICK LAYER OF SHREDDED HARDWOOD BARK MULCH. ALL GROUND COVER BEDS SHALL BE COVERED WITH 1" SHREDDED HARDWOOD BARK MULCH. BARK MULCH SHALL BE APPROVED BY LANDSCAPE DESIGNER AND SHALL BE UNIFORM IN TEXTURE AND COLOR AND SHALL BE OBTAINED FROM SAWMILL OR LUMBERING OPERATIONS. NO UTILITY MULCH OR PROCESSED TREE TRIMMINGS WILL BE ALLOWED.
3. AN APPROVED PRE-EMERGENT HERBICIDE SHALL BE APPLIED IN ALL PLANTING AND GROUND COVER BEDS AT RATES SPECIFIED BY MANUFACTURER FOR EACH VARIETY OF PLANT.
4. FINAL PLACEMENT OF PLANT MATERIALS, ETC. SHALL BE APPROVED BY LANDSCAPE DESIGNER BEFORE PLANTING OPERATIONS ARE TO PROCEED. ALL TREE LOCATIONS SHALL BE MARKED WITH A WOODED STAKE INDICATING VARIETY AND SIZE OF TREE. ALL GROUND COVER AND MULCH BED LINES SHALL BE MARKED BY A HIGHLY VISIBLE PAINT LINE WITH OCCASIONAL WOOD STAKES FOR REFERENCE. ALL STAKES SHALL BE REMOVED FOLLOWING PLANTINGS OPERATIONS. LANDSCAPE DESIGNER RESERVES THE RIGHT TO ADJUST PLANT LOCATIONS ON SITE.
5. NO SUBSTITUTIONS OF PLANT MATERIAL WILL BE ALLOWED. IF PLANTS ARE SHOWN TO BE UNAVAILABLE, THE CONTRACTOR SHALL NOTIFY LANDSCAPE DESIGNER PRIOR TO BID DATE IN WRITING. ALL PLANTS SHALL BE INSPECTED AND TAGGED WITH PROJECT IDENTIFICATION AT NURSERY OR CONTRACTORS OPERATION PRIOR TO MOVING TO JOB SITE. PLANTS MAY ALSO BE INSPECTED AND APPROVED OR REJECTED ON THE JOB SITE.
6. ALL PLANTS ARE TO MEET OR EXCEED AMERICAN STANDARDS FOR NURSERY STOCK, LATEST EDITION, AS SET FORTH BY AMERICAN ASSOCIATION OF NURSERYMEN.
7. PLANTS AND ALL OTHER MATERIALS TO BE STORED ON SITE WILL BE PLACED WHERE THEY WILL NOT CONFLICT WITH CONSTRUCTION OPERATIONS AND AS DIRECTED BY OWNER.
8. ALL NEW LANDSCAPE PLANTINGS SHALL BE GUARANTEED FOR A PERIOD OF ONE YEAR FOLLOWING FINAL INSPECTION BY LANDSCAPE DESIGNER. AT THE END OF THIS PERIOD, PLANT MATERIAL TERMED DEAD OR UNSATISFACTORY BY LANDSCAPE DESIGNER SHALL BE REPLACED AT NO ADDITIONAL CHARGE BY THE LANDSCAPE CONTRACTOR.
9. THE LANDSCAPE CONTRACTOR SHALL OBTAIN AND PAY FOR ALL PERMITS AND FEES THAT MAY BE REQUIRED FOR HIS PORTION OF WORK.
10. PEAT MOSS TO BE USED ON PROJECT SHALL BE A DOMESTIC OR IMPORTED MATERIAL, CHOCOLATE BROWN IN COLOR AND COMPOSED OF PARTIALLY DECOMPOSED VEGETABLE MATERIAL. PEAT MOSS TO ALSO BE MILDLY ACIDIC IN CHARACTER AND SHALL MEET APPROVAL OF LANDSCAPE DESIGNER.
11. LANDSCAPE CONTRACTOR SHALL NOTIFY LANDSCAPE DESIGNER IN WRITING PRIOR TO BID DATE OF ANY PLANTS THAT HE FEELS MAY NOT SURVIVE IN LOCATIONS NOTED.
12. ALL LANDSCAPING PLANTINGS TO BE MAINTAINED FOR 1 YEAR FOLLOWING TURNOVER. MAINTENANCE TO INCLUDE WATERING, WEEDING, CULTIVATION, MULCHING, MOWING AND ALL OTHER NECESSARY OPERATIONS REQUIRED FOR PROPER ESTABLISHMENT OF PLANTINGS. NOTE: AT END OF MAINTENANCE PERIOD, CONTRACTOR TO REMOVE GUYING AND STAKING FROM TREES.
13. CONTRACTOR TO SUBMIT UNIT PRICES ON EVERY TYPE OF WORK AS REQUESTED BY LANDSCAPE DESIGNER.
14. BACKFILL FOR TREE AND SHRUB PLANTING SHALL BE 75% APPROVED TOPSOIL AND 25% APPROVED PEAT MOSS. TOP LAYER OF BACKFILL SHALL BE 100% EXISTING TOPSOIL. A 5-10-5 RELEASE FERTILIZER SHALL BE INCORPORATED INTO BACKFILL AT APPROVED RATES.
15. PROVIDE MINIMUM 4" PLANTING SOIL IN ALL GROUND COVER AND FLOWER AREAS WITH MIXTURE COMPRISING OF ONE PART COMMERCIAL GRADE 'POTTING SOIL,' 5 PARTS TOPSOIL AND 4 PARTS PEAT MOSS. A FULL 4" LAYER OF APPROVED SHREDDED FIBROUS PEAT MOSS MAY BE USED IN LIEU OF PLANTING MIX.
16. PLANTS SHALL BEAR A TAG SHOWING GENUS, SPECIES AND VARIETY.
17. PLANTS SHALL BE CERTIFIED BY THE STATE OF INDIANA DEPARTMENT OF NATURAL RESOURCES AND FREE FROM DISEASE OR HAZARDOUS INSECTS.
18. IT SHALL BE THE RESPONSIBILITY OF THE CONTRACTOR TO VERIFY ALL EXISTING UTILITIES PERTAINING TO THEIR PHASE OF WORK. UTILITIES ARE SHOWN TO BE APPROXIMATE. CALL UTILITY LOCATE PRIOR TO ANY PLACEMENT OF PLANT MATERIAL OR OTHER LANDSCAPE MATERIAL.

PLANT SCHEDULE

PLAN KEY	BOTANICAL NAME	COMMON NAME (AVERAGE MATURE HT.)	SIZE	QUANTITY	ROOT CONDITION B & B	BARE	CONT	ON CENTER SPACING	SPECIAL INSTRUCTIONS
	CANOPY DECIDUOUS TREES								
ArA	ACER RUBRUM 'AUTUMN FLAME'	AUTUMN FLAME RED MAPLE (40')	2 1/2"	24	X			SEE PLAN	X
CC	CARPINUS CAROLINIANA	AMERICAN HORNBEAM (25')	2 1/2"	27	X			SEE PLAN	X
GtS	GLEDITSIA TRIACANTHOS INERMIS 'SKYLINE'	SKYLINE HONEYLOCUST (40')	2 1/2"	37	X			SEE PLAN	X
LT	LIRIODENDRON TULIPIFERA	TULIP TREE (45')	2 1/2"	12	X			SEE PLAN	X
QR	QUERCUS RUBRA	RED OAK (45')	2 1/2"	15	X			SEE PLAN	X
	ORNAMENTAL TREES								
CP	CRATAEGUS PHAENOPYRUM	WASHINGTON HAWTHORN (30')	2 1/2"	8			X	SEE PLAN	MIN. 24"
	EVERGREEN TREES								
PgD	PICEA GLAUCA 'DENSATA'	BLACK HILLS SPRUCE (12')	5'	17			X	SEE PLAN	MIN. 24"
PO	PICEA OMORIKA	SERBIAN SPRUCE (25')	5'	6			X	SEE PLAN	MIN. 24"
PF	PINUS FLEXILIS	LIMBER PINE (15')	5'	18			X	SEE PLAN	MIN. 24"
	DECIDUOUS SHRUBS								
AmA	ARONIA MELANOCARPA 'AUTUMN MAGIC'	AUTUMN MAGIC BLACK CHOKEBERRY (5')	#5	15			X	SEE PLAN	MIN. 24"
PfG	POTENTILLA FRUTICOSA 'GOLDFINGER'	GOLDFINGER POTENTILLA (3')	#2	6			X	SEE PLAN	MIN 18"
SG	SPIRAEA X 'GOLD MOUND'	GOLD MOUND SPIREA (3')	#3	3			X	SEE PLAN	MIN 18"
VJ	VIBURNUM X JUDDII	JUDD'S VIBURNUM (6')	#5	8			X	SEE PLAN	MIN 24"
	EVERGREEN SHRUBS								
BkG	BUXUS X KOREANA 'GREEN GEM'	GREEN GEM BOXWOOD (3.5')	18"	40	X			SEE PLAN	MIN 18"
IgC	ILEX GLABRA 'CHAMZIN'	NORDIC HOLLY (3')	18"	24	X			SEE PLAN	MIN 18"
IxW	ILEX X 'WILLEMER'	EMERALD MAGIC HOLLY (3.5')	#3	20			X	SEE PLAN	MIN 18"
TmD	TAXUS X MEDIA 'DENSIFORMIS'	DENSE YEW (5')	18"	20	X			SEE PLAN	MIN 18"
	ORNAMENTAL GRASSES								
PaH	PENNISETUM ALOPECUROIDES 'HAMELN'	HAMELN FOUNTAIN GRASS (2.5')	#1	41			X	2.5'	X
PsR	PENNISETUM SETACEUM 'RUBRUM'	PURPLE FOUNTAIN GRASS (2.5')	#1	43			X	2.5'	X
	PERENNIALS								
CvM	COREOPSIS VERTICILLATA 'MOONBEAM'	MOONBEAM COREOPSIS	#1	55			X	1.5'	X
LsS	LIRIOPE SPICATA 'SILVER DRAGON'	SILVER DRAGON LILYTUFT	#1	197			X	1'	X

LANDSCAPE RECOMMENDATIONS

REQUIREMENT:	REQUIRED:	PROVIDED:
SECTION 3.3: STANDARDS (MXC) - MAXIMUM LOT COVERAGE (ALL HARD SURFACES)	75% MAX.	88%
SECTION 5.4: GATEWAY (GW-OL) C.2.i. SIDEWALKS & PEDESTRIAN WALKWAYS - WALKWAYS SHALL BE BORDERED ON EACH SIDE BY A PLANTING AREA THAT IS A MINIMUM OF 2' IN WIDTH. - THE PLANTING AREAS ON EACH SIDE OF THE WALKS SHALL EACH INCLUDE FLOWERS, SHRUBS, AND TREES A MIMIMUM OF 50% OF THEIR LENGTH.	- 44 LINEAR FT. x 50% = 22 L.F. FOR PLANTING	- 44 L.F. ON EACH SIDE OF THE SIDEWALK
SECTION 5.4: GATEWAY (GW-OL) C.2.iv. SIDEWALKS & PEDESTRIAN WALKWAYS - WALKWAYS ALONG THE FACADES OF THE BUILDING SHALL BE CONCRETE, 5' WIDE AND SEPARATED FROM THE BUILDING BY A LANDSCAPE AREA THAT I S A MINIMUM OF 5' IN WIDTH. - THE LANDSCAPE AREA SHALL INCLUDE BENCHES AND SEATING AREAS, AND BE PLANTED WITH FLOWERS, TREES, AND SHRUBS FOR A MINIMUM OF 50% OF ITS LENGTH.	- 715 LINEAR FT. x 50% = 357.5 LF FOR PLANTING	- 160 LF RELOCATED ACROSS NORTH DRIVE - 197.5 LF RELOCATED TO PARKING ISLANDS
SECTION 7.16: LANDSCAPING STANDARDS D. PROPERTY INTERIOR REQUIREMENTS - PROVIDE 1 BROADLEAF, DECIDUOUS TREE AND/OR EVERGREEN CONIFER FOR EVERY1,500 SQ. FT. OF REQUIRED YARD AREA.	(125,670 SF) - 84 TREES	- 84 TREES
SECTION 7.16: LANDSCAPING STANDARDS E. PARKING LOT PERIMETER REQUIREMENTS - A MINIMUM OF 1 TREE SHALL BE PROVIDED FOR EVERY 80 LINEAR FEET OF LANDSCAPED AREA. - A MINIMUM OF 1 SHRUB SHALL BE PROVIDED FOR EVERY 1 TREE REQUIRED.	**SOUTH (~546')** - 7 TREES - 7 SHRUBS	**SOUTH (~546')** - 7 TREES - 10 SHRUBS
SECTION 7.16: LANDSCAPING STANDARDS F. PARKING LOT INTERIOR REQUIREMENTS - LANDSCAPE ISLANDS WITH A SURFACE AREA EQUAL TO 5% OF THE AREA OF THE PAVED SURFACE SHALL BE PROVIDED IN ALL PARKING LOTS. - ALL LANDSCAPE ISLANDS MUST BE A MINIMUM OF 300 SQ. FT. IN AREA. - A MINIMUM OF 1 BROADLEAF/DECIDUOUS TREE SHALL BE PROVIDED FOR EVERY 300 SQ.FT. OF LANDSCAPED AREA REQ'D.	- 309,529 SF PAVED AREA x 5% = 15,476 SF ISLANDS - 52 TREES	- 16,886 SF ISLANDS - 52 TREES
SECTION 6.15: STREET TREE STANDARDS - 1 TREE PER 35 FEET OF FRONTAGE	**MALLORY PKWY (~726')** - 21 TREES	**MALLORY PKWY (~726')** - 21 TREES

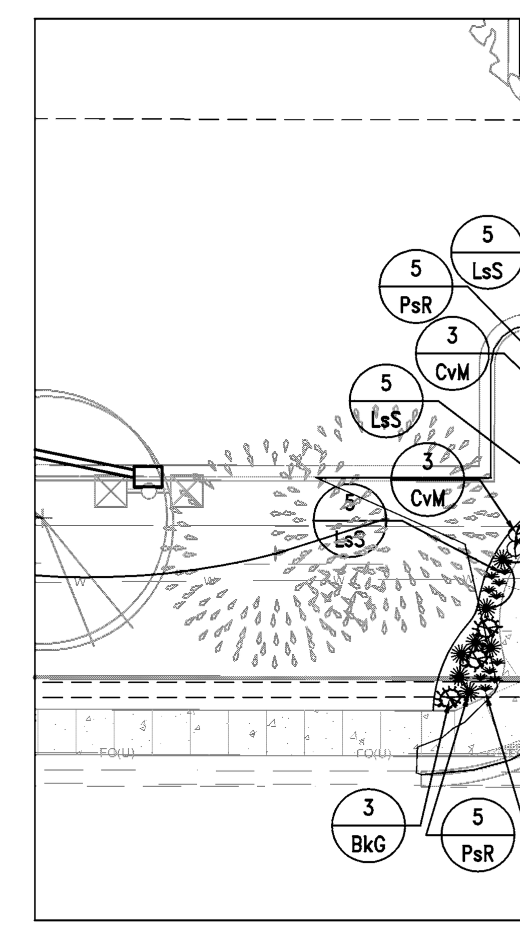

SIDEWALK PLANTING DETAIL

SCALE: 1" = 20'

PLAN CERTIFICATE NOTE:

ORIGINAL ALTA, TOPOGRAPHY, UTILITIES, STORM SEWERS, AND ALL OTHER EXISTING CONDITIONS ITEMS WERE PREPARED BY BANNING ENGINEERING.

FINAL DRAWINGS FOR THE KROGER SITE WERE PREPARED BY WEIHE ENGINEERS, INC. AND JAMES K. SHINNEMAN. FINAL CONSTRUCTION PLANS ARE THOSE PLANS CONTAINING A FINAL REVISION DATE AFTER 02/12/2015. WEIHE ENGINEERS, INC. AND JAMES K. SHINNEMAN ACCEPT RESPONSIBILITY ONLY FOR THE KROGER SITE IMPROVEMENTS RELATED TO THE ENGINEERING WORK SHOWN ON THESE PLANS.

SCALE: 1" = 50

0 25 50 100

811

Know what's **below.**
Call before you dig.

Within Indiana Call
811 or 800-382-5544
24 Hours a Day, 7 Days a Week.

PER INDIANA STATE LAW IC 8-1-26. IT IS AGAINST THE LAW TO EXCAVATE WITHOUT NOTIFYING THE UNDERGROUND LOCATION SERVICE TWO (2) WORKING DAYS BEFORE COMMENCING WORK.

10505 N. College Avenue
Indianapolis, Indiana 46280
weihe.net
317 | 846 - 6611
800 | 452 - 6408
317 | 843 - 0546 *fax*
ALLAN H. WEIHE, P.E., L.S. - FOUNDER

WEIHE ENGINEERS
Land Surveying | Civil Engineering
Landscape Architecture

PROJECT NO.: W14.0460
DWG NAME: w140460-L101.dwg
DESIGNED BY: RLW/RAM
DRAWN BY: RLW/RAM
CHECKED BY: JKS
DATE: 02.12.2015

DATE	BY	REVISIONS AND ISSUES
02.12.2015	BJS	SUBMITTED FOR INITIAL REVIEW

ROBERT A. MEZYKOWSKI REGISTERED No. 80050080 STATE OF INDIANA LANDSCAPE ARCHITECT
APPROVAL PENDING NOT FOR CONSTRUCTION

ROBERT A. MEZYKOWSKI L.A.80050080

PREPARED FOR:
KROGER STORE J-979
KROGER MARKETPLACE - MALLORY PARKWAY AND U.S. 31
LANDSCAPE PLAN
Part of the NE/4 of Section 15, Township 12 North, Range 4 East, Franklin Township, Johnson County, Indiana

SHEET NO.
L1.01
PROJECT NO.
W14.0460

LOCATION: H:\2014\W140460\Engineering\design\conset\w140460-L101.dwg
LAYOUT: L1.01
DATE/TIME: February 12, 2015 – 7:35am
PLOTTED BY: schoeffb

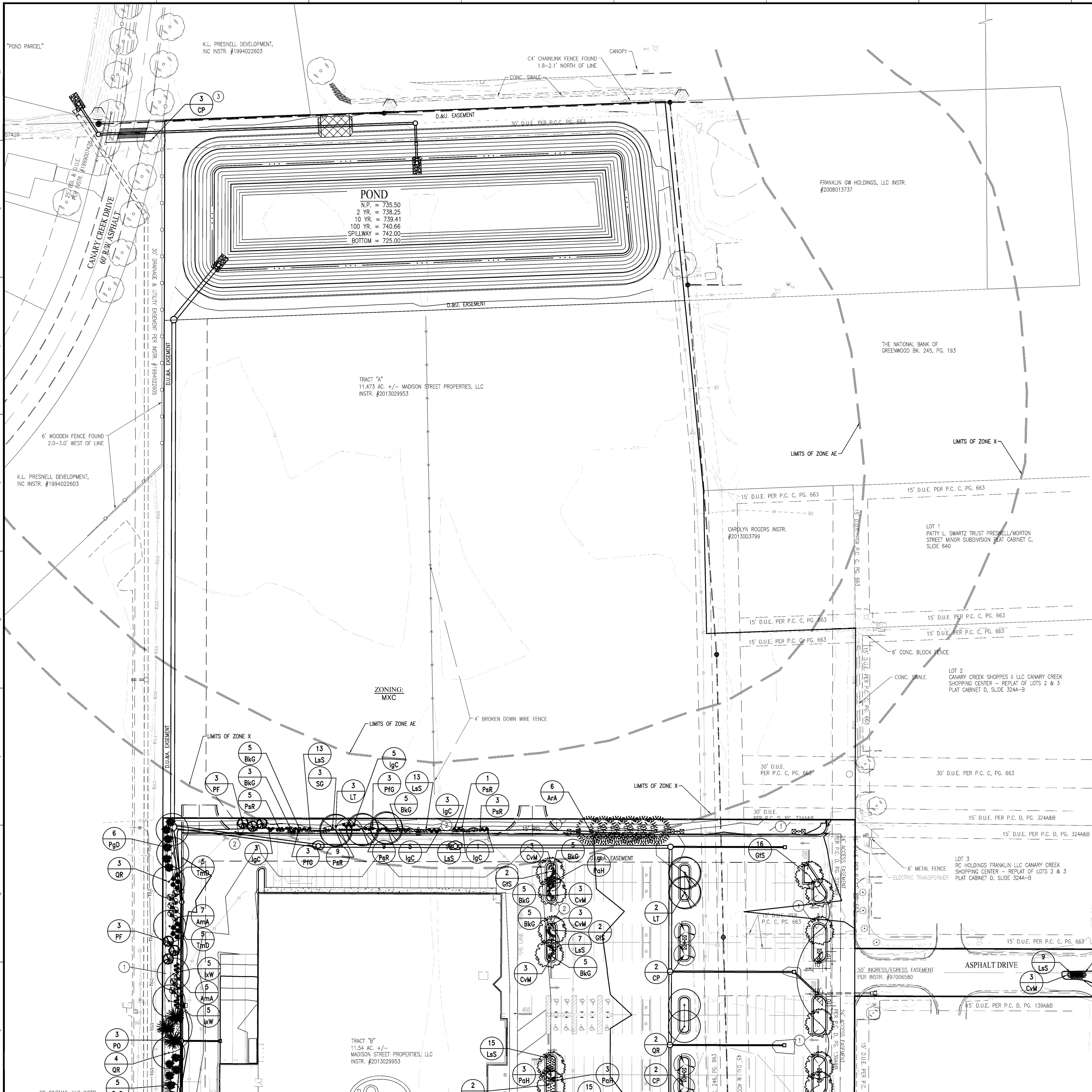

GENERAL NOTES

1. IN CASE OF DISCREPANCIES BETWEEN THE PLAN AND THE PLANT LIST, THE PLAN SHALL DICTATE. IF IN QUESTION, CONTACT THE LANDSCAPE DESIGNER.
2. ALL SHRUBS PLANTING AREAS TO BE COVERED WITH 4" THICK LAYER OF SHREDDED HARDWOOD BARK MULCH. ALL GROUND COVER BEDS SHALL BE COVERED WITH 1" SHREDDED HARDWOOD BARK MULCH. BARK MULCH SHALL BE APPROVED BY LANDSCAPE DESIGNER AND SHALL BE UNIFORM IN TEXTURE AND COLOR AND SHALL BE OBTAINED FROM SAWMILL OR LUMBERING OPERATIONS. NO UTILITY MULCH OR PROCESSED TREE TRIMMINGS WILL BE ALLOWED.
3. AN APPROVED PRE-EMERGENT HERBICIDE SHALL BE APPLIED IN ALL PLANTING AND GROUND COVER BEDS AT RATES SPECIFIED BY MANUFACTURER FOR EACH VARIETY OF PLANT.
4. FINAL PLACEMENT OF PLANT MATERIALS, ETC. SHALL BE APPROVED BY LANDSCAPE DESIGNER BEFORE PLANTING OPERATIONS ARE TO PROCEED. ALL TREE LOCATIONS SHALL BE MARKED WITH A WOODED STAKE INDICATING VARIETY AND SIZE OF TREE. ALL GROUND COVER AND MULCH BED LINES SHALL BE MARKED BY A HIGHLY VISIBLE PAINT LINE WITH OCCASIONAL WOOD STAKES FOR REFERENCE. ALL STAKES SHALL BE REMOVED FOLLOWING PLANTINGS OPERATIONS. LANDSCAPE DESIGNER RESERVES THE RIGHT TO ADJUST PLANT LOCATIONS ON SITE.
5. NO SUBSTITUTIONS OF PLANT MATERIAL WILL BE ALLOWED. IF PLANTS ARE SHOWN TO BE UNAVAILABLE, THE CONTRACTOR SHALL NOTIFY LANDSCAPE DESIGNER PRIOR TO BID DATE IN WRITING. ALL PLANTS SHALL BE INSPECTED AND TAGGED WITH PROJECT IDENTIFICATION AT NURSERY OR CONTRACTORS OPERATION PRIOR TO MOVING TO JOB SITE. PLANTS MAY ALSO BE INSPECTED AND APPROVED OR REJECTED ON THE JOB SITE.
6. ALL PLANTS ARE TO MEET OR EXCEED AMERICAN STANDARDS FOR NURSERY STOCK, LATEST EDITION, AS SET FORTH BY AMERICAN ASSOCIATION OF NURSERYMEN.
7. PLANTS AND ALL OTHER MATERIALS TO BE STORED ON SITE WILL BE PLACED WHERE THEY WILL NOT CONFLICT WITH CONSTRUCTION OPERATIONS AND AS DIRECTED BY OWNER.
8. ALL NEW LANDSCAPE PLANTINGS SHALL BE GUARANTEED FOR A PERIOD OF ONE YEAR FOLLOWING FINAL INSPECTION BY LANDSCAPE DESIGNER. AT THE END OF THIS PERIOD, PLANT MATERIAL TERMED DEAD OR UNSATISFACTORY BY LANDSCAPE DESIGNER SHALL BE REPLACED AT NO ADDITIONAL CHARGE BY THE LANDSCAPE CONTRACTOR.
9. THE LANDSCAPE CONTRACTOR SHALL OBTAIN AND PAY FOR ALL PERMITS AND FEES THAT MAY BE REQUIRED FOR HIS PORTION OF WORK.
10. PEAT MOSS TO BE USED ON PROJECT SHALL BE A DOMESTIC OR IMPORTED MATERIAL, CHOCOLATE BROWN IN COLOR AND COMPOSED OF PARTIALLY DECOMPOSED VEGETABLE MATERIAL. PEAT MOSS TO ALSO BE MILDLY ACIDIC IN CHARACTER AND SHALL MEET APPROVAL OF LANDSCAPE DESIGNER.
11. LANDSCAPE CONTRACTOR SHALL NOTIFY LANDSCAPE DESIGNER IN WRITING PRIOR TO BID DATE OF ANY PLANTS THAT HE FEELS MAY NOT SURVIVE IN LOCATIONS NOTED.
12. ALL LANDSCAPING PLANTINGS TO BE MAINTAINED FOR 1 YEAR FOLLOWING TURNOVER. MAINTENANCE TO INCLUDE WATERING, WEEDING, CULTIVATION, MULCHING, MOWING AND ALL OTHER NECESSARY OPERATIONS REQUIRED FOR PROPER ESTABLISHMENT OF PLANTINGS. NOTE: AT END OF MAINTENANCE PERIOD, CONTRACTOR TO REMOVE GUYING AND STAKING FROM TREES.
13. CONTRACTOR TO SUBMIT UNIT PRICES ON EVERY TYPE OF WORK AS REQUESTED BY LANDSCAPE DESIGNER.
14. BACKFILL FOR TREE AND SHRUB PLANTING SHALL BE 75% APPROVED TOPSOIL AND 25% APPROVED PEAT MOSS. TOP LAYER OF BACKFILL SHALL BE 100% EXISTING TOPSOIL. A 5-10-5 ANALYSIS SLOW RELEASE FERTILIZER SHALL BE INCORPORATED INTO BACKFILL AT APPROVED RATES.
15. PROVIDE MINIMUM 4" PLANTING SOIL IN ALL GROUND COVER AND FLOWER AREAS WITH MIXTURE COMPRISING OF ONE PART COMMERCIAL GRADE 'POTTING SOIL,' 5 PARTS TOPSOIL AND 4 PARTS PEAT MOSS. A FULL 4" LAYER OF APPROVED SHREDDED FIBROUS PEAT MOSS MAY BE USED IN LIEU OF PLANTING MIX.
16. PLANTS SHALL BEAR A TAG SHOWING GENUS, SPECIES AND VARIETY.
17. PLANTS SHALL BE CERTIFIED BY THE STATE OF INDIANA DEPARTMENT OF NATURAL RESOURCES AND FREE FROM DISEASE OR HAZARDOUS INSECTS.
18. IT SHALL BE THE RESPONSIBILITY OF THE CONTRACTOR TO VERIFY ALL EXISTING UTILITIES PERTAINING TO THEIR PHASE OF WORK. UTILITIES ARE SHOWN TO BE APPROXIMATE. CALL UTILITY LOCATE PRIOR TO ANY PLACEMENT OF PLANT MATERIAL OR OTHER LANDSCAPE MATERIAL.

PLANT SCHEDULE

PLAN KEY	BOTANICAL NAME	COMMON NAME (AVERAGE MATURE HT.)	SIZE	QUANTITY	ROOT CONDITION B & B	ROOT CONDITION BARE	ROOT CONDITION CONT	ON CENTER SPACING	SPECIAL INSTRUCTIONS
	CANOPY DECIDUOUS TREES								
ArA	ACER RUBRUM 'AUTUMN FLAME'	AUTUMN FLAME RED MAPLE (40')	2 1/2"	24	X			SEE PLAN	X
CC	CARPINUS CAROLINIANA	AMERICAN HORNBEAM (25')	2 1/2"	27	X			SEE PLAN	X
GtS	GLEDITSIA TRIACANTHOS INERMIS 'SKYLINE'	SKYLINE HONEYLOCUST (40')	2 1/2"	37	X			SEE PLAN	X
LT	LIRIODENDRON TULIPIFERA	TULIP TREE (45')	2 1/2"	12	X			SEE PLAN	X
QR	QUERCUS RUBRA	RED OAK (45')	2 1/2"	15	X			SEE PLAN	X
	ORNAMENTAL TREES								
CP	CRATAEGUS PHAENOPYRUM	WASHINGTON HAWTHORN (30')	2 1/2"	8			X	SEE PLAN	MIN. 24"
	EVERGREEN TREES								
PgD	PICEA GLAUCA 'DENSATA'	BLACK HILLS SPRUCE (12')	5'	17			X	SEE PLAN	MIN. 24"
PO	PICEA OMORIKA	SERBIAN SPRUCE (25')	5'	6			X	SEE PLAN	MIN. 24"
PF	PINUS FLEXILIS	LIMBER PINE (15')	5'	18			X	SEE PLAN	MIN. 24"
	DECIDUOUS SHRUBS								
AmA	ARONIA MELANOCARPA 'AUTUMN MAGIC'	AUTUMN MAGIC BLACK CHOKEBERRY (5')	#5	15			X	SEE PLAN	MIN. 24"
PfG	POTENTILLA FRUTICOSA 'GOLDFINGER'	GOLDFINGER POTENTILLA (3')	#2	6			X	SEE PLAN	MIN 18"
SG	SPIRAEA X 'GOLD MOUND'	GOLD MOUND SPIREA (3')	#3	3			X	SEE PLAN	MIN 18"
VJ	VIBURNUM X JUDDII	JUDD'S VIBURNUM (6')	#5	8			X	SEE PLAN	MIN 24"
	EVERGREEN SHRUBS								
BkG	BUXUS X KOREANA 'GREEN GEM'	GREEN GEM BOXWOOD (3.5')	18"	40	X			SEE PLAN	MIN 18"
IgC	ILEX GLABRA 'CHAMZIN'	NORDIC HOLLY (3')	18"	24	X			SEE PLAN	MIN 18"
IxW	ILEX X 'WILLEMER'	EMERALD MAGIC HOLLY (3.5')	#3	20			X	SEE PLAN	MIN 18"
TmD	TAXUS X MEDIA 'DENSIFORMIS'	DENSE YEW (5')	18"	20	X			SEE PLAN	MIN 18"
	ORNAMENTAL GRASSES								
PaH	PENNISETUM ALOPECUROIDES 'HAMELN'	HAMELN FOUNTAIN GRASS (2.5')	#1	41			X	2.5'	X
PsR	PENNISETUM SETACEUM 'RUBRUM'	PURPLE FOUNTAIN GRASS (2.5')	#1	43			X	2.5'	X
	PERENNIALS								
CvM	COREOPSIS VERTICILLATA 'MOONBEAM'	MOONBEAM COREOPSIS	#1	55			X	1.5'	X
LsS	LIRIOPE SPICATA 'SILVER DRAGON'	SILVER DRAGON LILYTUFT	#1	197			X	1'	X

LANDSCAPE PLAN NOTES

(1) SOD (ALTERNATE)- ALL SOD SHALL BE CERTIFIED GRADE CULTIVATED GRASS SOD: OF "ADVENTURE BLEND" TURF TYPE TALL FESCUE (BY GENERAL CONTRACTOR)

(2) MULCH

(3) REPLACE ALL DAMAGED AND REMOVED STREET TREES ASSOCIATED WITH THE STORM SEWER OUTFALL SCOPE OF WORK. THESE 3 TREES SHOWN ARE EXCLUDED FROM THE PLANTING SCHEDULE IN CASE THEY CAN BE PRESERVED IN PLACE.

PLAN CERTIFICATE NOTE:

ORIGINAL ALTA, TOPOGRAPHY, UTILITIES, STORM SEWERS, AND ALL OTHER EXISTING CONDITIONS ITEMS WERE PREPARED BY BANNING ENGINEERING.

FINAL DRAWINGS FOR THE KROGER SITE WERE PREPARED BY WEIHE ENGINEERS, INC. AND JAMES K. SHINNEMAN. FINAL CONSTRUCTION PLANS ARE THOSE PLANS CONTAINING A FINAL REVISION DATE AFTER 02/12/2015. WEIHE ENGINEERS, INC. AND JAMES K. SHINNEMAN ACCEPT RESPONSIBILITY ONLY FOR THE KROGER SITE IMPROVEMENTS RELATED TO THE ENGINEERING WORK SHOWN ON THESE PLANS.

SCALE: 1" = 50

0 25 50 100

811

Know what's **below.**
Call before you dig.

Within Indiana Call
811 or 800–382–5544
24 Hours a Day, 7 Days a Week.

PER INDIANA STATE LAW IC 8–1–26. IT IS AGAINST THE LAW TO EXCAVATE WITHOUT NOTIFYING THE UNDERGROUND LOCATION SERVICE TWO (2) WORKING DAYS BEFORE COMMENCING WORK.

10505 N. College Avenue
Indianapolis, Indiana 46280
weihe.net

317 | 846 - 6611
800 | 452 - 6408
317 | 843 - 0546 fax

ALLAN H. WEIHE, P.E., L.S. - FOUNDER

WEIHE ENGINEERS
Land Surveying | Civil Engineering
Landscape Architecture

PROJECT NO.: W14.0460
DWG NAME: w140460-L101.dwg
DESIGNED BY: RLW/RAM
DRAWN BY: RLW/RAM
CHECKED BY: JKS
DATE: 02.12.2015

DATE	BY	REVISIONS AND ISSUES
02.12.2015	BJS	SUBMITTED FOR INITIAL REVIEW

ROBERT A. MEZYKOWSKI REGISTERED No.80050080 STATE OF INDIANA LANDSCAPE ARCHITECT
APPROVAL PENDING NOT FOR CONSTRUCTION

ROBERT A. MEZYKOWSKI L.A.80050080

PREPARED FOR:
KROGER STORE J-979
KROGER MARKETPLACE - MALLORY PARKWAY AND U.S. 31

LANDSCAPE PLAN
Part of the NE/4 of Section 15, Township 12 North, Range 4 East, Franklin Township, Johnson County, Indiana

SHEET NO.
L1.02

PROJECT NO.
W14.0460

LOCATION: H:\2014\W140460\Engineering\design\conset\w140460-L101.dwg
LAYOUT: L1.02
DATE/TIME: February 12, 2015 – 7:35am
PLOTTED BY: schoeffb

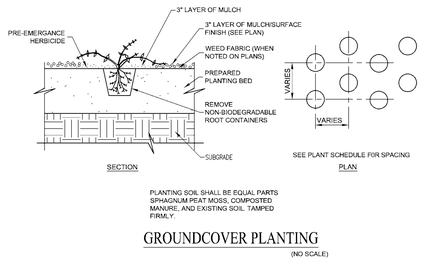

PLANTING SOIL SHALL BE EQUAL PARTS SPHAGNUM PEAT MOSS, COMPOSTED MANURE, AND EXISTING SOIL. TAMPED FIRMLY.

GROUNDCOVER PLANTING

(NO SCALE)

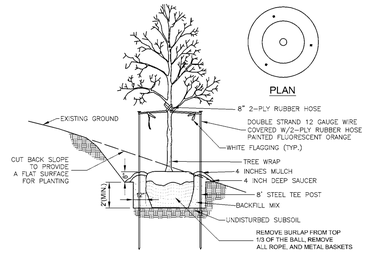

NOTES:
- SEE LANDSCAPE NOTES FOR THE TYPE OF MULCH MATERIAL TO USE.
- TOP OF ROOT BALL, TO BE SET 4" HIGHER THAN ADJACENT EARTH GRADE.

TREE PLANTING ON SLOPE

(NO SCALE)

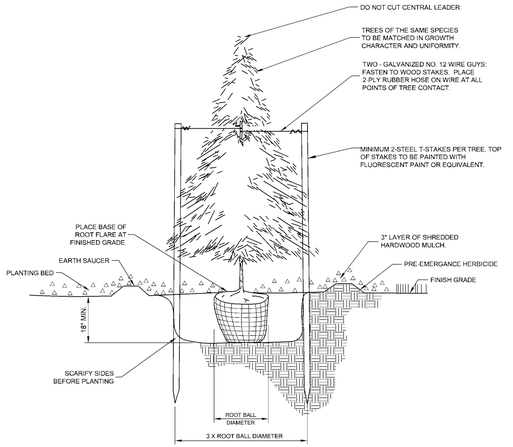

EVERGREEN PLANTING & STAKING

(NO SCALE)

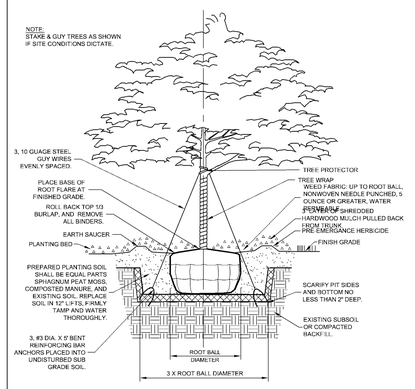

SHADE TREE PLANTING DETAIL

(NO SCALE)

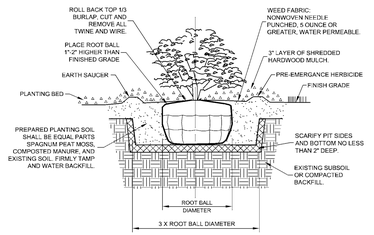

SHRUB & SMALL TREE PLANTING DETAIL

(NO SCALE)

10505 N. College Avenue
Indianapolis, Indiana 46280
weihe.net

317 | 846 - 6611
800 | 452 - 6408
317 | 843 - 0546 *fax*

ALLAN H. WEIHE, P.E., L.S. - FOUNDER

WEIHE ENGINEERS

Land Surveying | Civil Engineering
Landscape Architecture

REVISIONS AND ISSUES	BY	DATE
SUBMITTED FOR INITIAL REVIEW	BJS	02.12.2015

PROJECT NO.: W14.0460
DWG. NAME: w14046-L101.dwg
DESIGNED BY: RLW/SAM
DRAWN BY: RLW/SAM
CHECKED BY: AKS
DATE: 02.12.2015

ROBERT A. MEZYKOWSKI
REGISTERED
No. 80050080
STATE OF INDIANA
LANDSCAPE ARCHITECT
PROVIDENCE
NOT VALID UNLESS SIGNED AND SEALED

ROBERT A. MEZYKOWSKI L.A.80050080

PREPARED FOR:
KROGER STORE J-979

KROGER MARKETPLACE - MALLORY PARKWAY AND U.S. 31

LANDSCAPE DETAILS

Part of the NE¼ of Section 15, Township 12 North, Range 4 East, Franklin Township, Johnson County, Indiana

SHEET NO.
L2.01

PROJECT NO.
W14.0460

Know what's **below.**
Call before you dig.

Within Indiana Call
811 or 800-382-5544
24 Hours a Day, 7 Days a Week.

PER INDIANA STATE LAW IC 8-1-26, IT IS AGAINST THE LAW TO EXCAVATE WITHOUT NOTIFYING THE UNDERGROUND LOCATION SERVICE TWO (2) WORKING DAYS BEFORE COMMENCING WORK.

LOCATION: J:\2014\W14046\Engineering\Design\Construct\w14046-L101.dwg
LAYOUT: L2.01
DATE/TIME: February 12, 2015 – 7:35am
PLOTTED BY: schoettlp