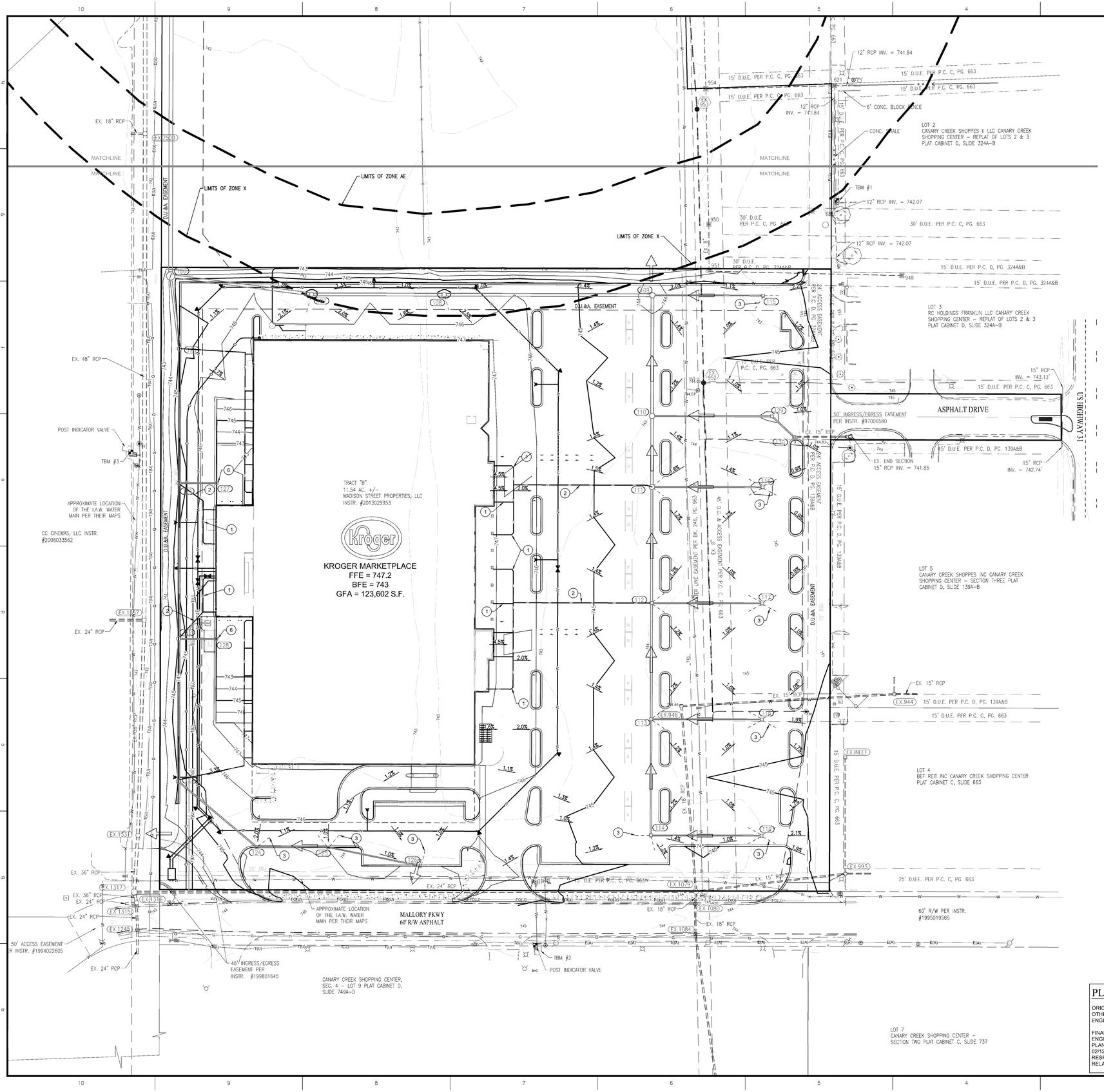

LEGEND

FH	=	EXIST. FIRE HYDRANT
WM	=	EXIST. WATER METER/VALVE
	=	EXIST. SIGN
	=	EXIST. MONITOR WELL
PKF	=	EXIST. IRON PIN & OR PK (SET/FOUND)
GM	=	EXIST. GAS METER
	=	EXIST. GAS VALVE
	=	EXIST. STORM INLET
	=	EXIST. STORM/SAN./TELE. MANHOLE
EM	=	EXIST. ELECTRIC METER
	=	EXIST. POWER POLE/POWER POLE w/ LIGHT
GA	=	EXIST. GUY ANCHOR
T.Ped.	=	EXIST. TELEPHONE PEDESTAL
AC	=	HVAC UNIT
CO	=	CLEANOUT
MB	=	MAILBOX
	=	LIGHT POLE
BOL	=	EXIST. BOLLARD
	=	EXIST. SANITARY SEWER LINE
	=	EXIST. STORM SEWER LINE
892	=	EXIST. CONTOURS
	=	CONCRETE END SECTION (C.E.S.)
GP	=	GATE POST
	=	TRANSFORMER
	=	RIGHT-OF-WAY LINE
	=	PROPOSED SANITARY SEWER LINE
	=	PROPOSED STORM SEWER LINE
STM	=	PROPOSED HDPE ROOF DRAIN
	=	PROPOSED PIPE BOLLARD
	=	PROPOSED MANHOLE (MH)
892	=	PROPOSED CONTOURS
894.50	=	PROPOSED ELEVATION
	=	DRAINAGE FLOW ARROW
	=	EXISTING TREE LINE
	=	PROPOSED DIRECTIONAL SIGN
F.F.E.	=	FINISH FLOOR ELEVATION
TC	=	TOP OF (MANHOLE / INLET) CASTING
INV	=	INVERT ELEVATION
RCP	=	REINFORCED CONCRETE PIPE
CMP	=	CORRUGATED METAL PIPE
PVC	=	POLYVINYL CHLORIDE PIPE
HDPE	=	HIGH DENSITY POLYETHYLENE
	=	FLOW LINE
STR.	=	STRUCTURE
M.E.G. OR M.E.	=	MATCH EXISTING GRADE
TOW OR TW	=	TOP OF WALL
SSD	=	SUB-SURFACE DRAINAGE
TOC	=	TOP OF CURB
GUT	=	GUTTER
W	=	WATER LINE
G	=	GAS LINE
OHU	=	OVERHEAD UTILITY LINE
T	=	TELEPHONE LINE
E	=	ELECTRIC LINE
TBM	=	TEMPORARY BENCHMARK
	=	PARKING COUNT
	=	EMERGENCY SPILLWAY

DRAINAGE PLAN NOTES

1. 6" HDPE ROOF DRAIN @ 1.0% MINIMUM. START INVERT = ~745.0
2. 8" HDPE ROOF DRAIN @ 1.0% MINIMUM
3. 10' OF 4" SUBSURFACE DRAINS
4. INSTALL 10' x 20' x 1.5' REVETMENT RIP-RAP ON FILTER FABRIC
5. STORM WATER DETENTION POND.
6. PROVIDE NEENAH R-3165 STRUCTURES WITHIN THE TRUCK WELL.
7. DETENTION POND OVERFLOW FLOOD ROUTING WITH MAT. SEE PROJECT SPECIFICATIONS FOR FURTHER DETAIL.

GENERAL NOTES

1. ALL HDPE PIPE SHALL BE DUAL WALLED, HANCOR HQ, ADS N-12 PIPE OR APPROVED EQUAL
2. ALL FITTINGS AND ACCESSORIES INCLUDING BUT NOT LIMITED TO END CAPS, CLEANOUTS, REDUCERS, ETC., SHALL BE OF HDPE MATERIAL COMPARABLE WITH STORAGE PIPES
3. PROVIDE BACKFILL WITH A MINIMUM OF 4" BEDDING MATERIAL OF #8 AGGREGATE COMPACTED IN 8" LIFTS TO 95% MAXIMUM DRY DENSITY
4. VERIFY EXISTING STORM INVERT ELEVATIONS PRIOR TO STARTING NEW STORM SEWER CONNECTION
5. THE SITE DOES LIE IN A SPECIAL FLOOD HAZARD AREA 'X' AS ESTABLISHED BY THE FEDERAL EMERGENCY MANAGEMENT AGENCY - NATIONAL FLOOD INSURANCE PROGRAM, WHEN PLOTTED BY SCALE ON FLOOD INSURANCE RATE MAP #18081C0227 D, DATED AUGUST 2, 2007.

PLAN CERTIFICATE NOTE:

ORIGINAL ALTA, TOPOGRAPHY, UTILITIES, STORM SEWERS, AND ALL OTHER EXISTING CONDITIONS ITEMS WERE PREPARED BY BANNING ENGINEERING.

FINAL DRAWINGS FOR THE KROGER SITE WERE PREPARED BY WEIHE ENGINEERS, INC. AND JAMES K. SHINNEMAN. FINAL CONSTRUCTION PLANS ARE THOSE PLANS CONTAINING A FINAL REVISION DATE AFTER 02/12/2015. WEIHE ENGINEERS, INC. AND JAMES K. SHINNEMAN ACCEPT RESPONSIBILITY ONLY FOR THE KROGER SITE IMPROVEMENTS RELATED TO THE ENGINEERING WORK SHOWN ON THESE PLANS.

SCALE: 1" = 50

0 25 50 100

811 Know what's below. Call before you dig.

Within Indiana Call 811 or 800-382-5544
24 Hours a Day, 7 Days a Week.

PER INDIANA STATE LAW IC 8-1-26, IT IS AGAINST THE LAW TO EXCAVATE WITHOUT NOTIFYING THE UNDERGROUND LOCATION SERVICE TWO (2) WORKING DAYS BEFORE COMMENCING WORK.

10505 N. College Avenue
Indianapolis, Indiana 46280
weihe.net

317 846 - 6611
800 452 - 6408
317 843 - 0546 fax

ALLAN H. WEIHE, P.E., L.S. - FOUNDER

WEIHE ENGINEERS

Land Surveying | Civil Engineering
Landscape Architecture

REVISIONS AND ISSUES SUBMITTED FOR INITIAL REVIEW	DATE	BY
	02.12.2015	BJS

PROJECT NO:	W14.0460
DWG NAME:	w140460-C600 drain.dwg
DESIGNED BY:	RJ/WF/AM
DRAWN BY:	RJ/WF/AM
CHECKED BY:	JKS
DATE:	02.12.2015

JAMES K. SHINNEMAN P.E. 10200392

PREPARED FOR:

KROGER STORE J-979

KROGER MARKETPLACE - MALLORY PARKWAY AND U.S. 31

DRAINAGE PLAN

Part of the NE/4 of Section 15, Township 12 North, Range 4 East, Franklin Township, Johnson County, Indiana

SHEET NO.

C6.01

PROJECT NO.

W14.0460

LOCATION: J:\2014\W140460\Engineering\Design\Consst\w140460-C600 drain.dwg
LAYOUT: C6.01
DATE/TIME: February 12, 2015 - 7:37am
PLOTTED BY: schoefo

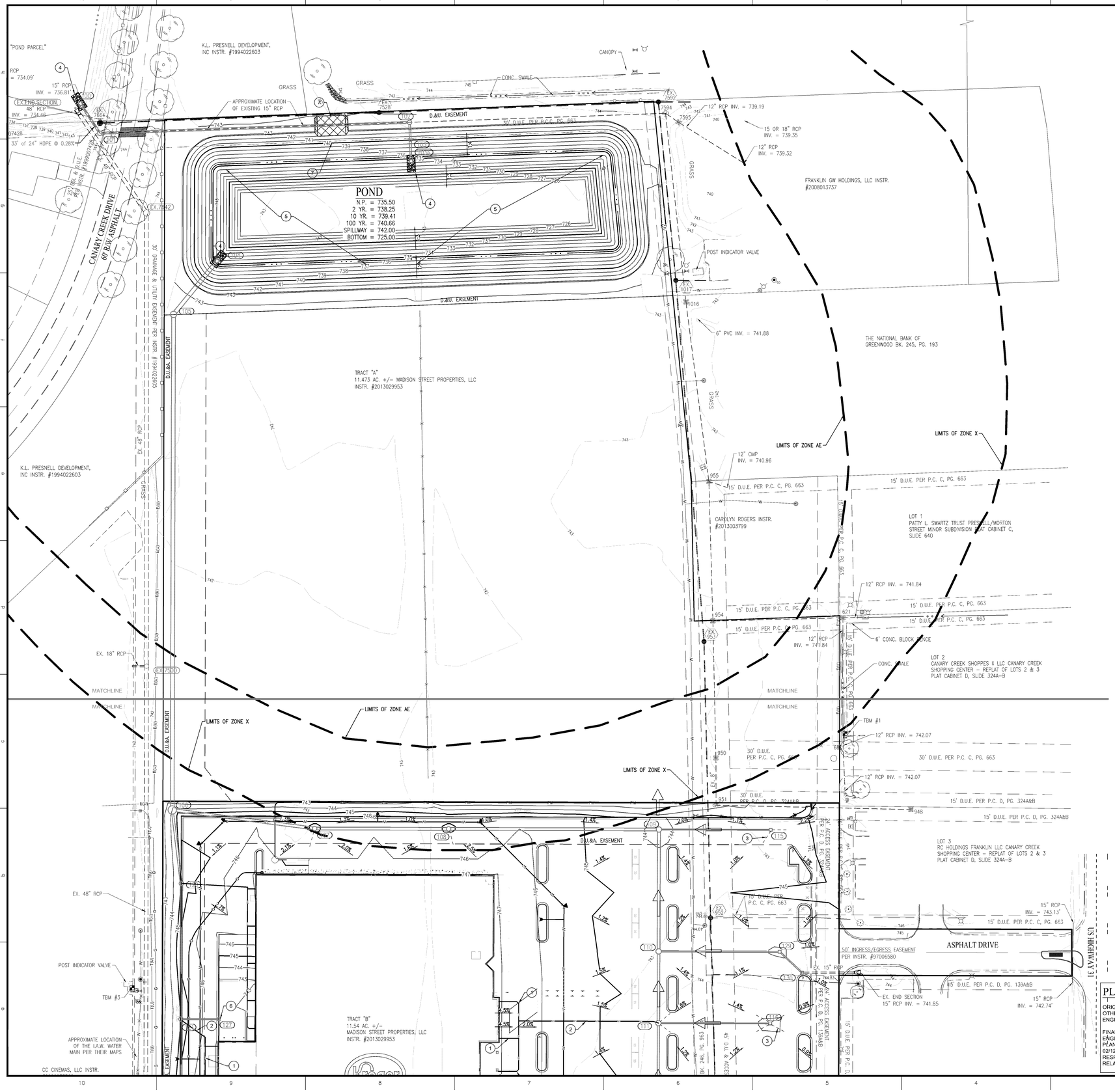

LEGEND

FH	=	EXIST. FIRE HYDRANT
WM	=	EXIST. WATER METER/VALVE
	=	EXIST. SIGN
	=	EXIST. MONITOR WELL
PKF	=	EXIST. IRON PIN & OR PK (SET/FOUND)
GM	=	EXIST. GAS METER
	=	EXIST. GAS VALVE
	=	EXIST. STORM INLET
	=	EXIST. STORM/SAN./TELE. MANHOLE
EM	=	EXIST. ELECTRIC METER
	=	EXIST. POWER POLE/POWER POLE w/ LIGHT
GA	=	EXIST. GUY ANCHOR
T.Ped	=	EXIST. TELEPHONE PEDESTAL
AC	=	HVAC UNIT
CO	=	CLEANOUT
MB	=	MAILBOX
	=	LIGHT POLE
BOL	=	EXIST. BOLLARD
	=	EXIST. SANITARY SEWER LINE
	=	EXIST. STORM SEWER LINE
892	=	EXIST. CONTOURS
	=	CONCRETE END SECTION (C.E.S.)
GP	=	GATE POST
	=	TRANSFORMER
	=	RIGHT-OF-WAY LINE
	=	PROPOSED SANITARY SEWER LINE
	=	PROPOSED STORM SEWER LINE
STM	=	PROPOSED HDPE ROOF DRAIN
	=	PROPOSED PIPE BOLLARD
	=	PROPOSED MANHOLE (MH)
892	=	PROPOSED CONTOURS
894.50	=	PROPOSED ELEVATION
	=	DRAINAGE FLOW ARROW
	=	EXISTING TREE LINE
	=	PROPOSED DIRECTIONAL SIGN
F.F.E.	=	FINISH FLOOR ELEVATION
TC	=	TOP OF (MANHOLE / IN.LET) CASTING
INV	=	INVERT ELEVATION
RCP	=	REINFORCED CONCRETE PIPE
CMP	=	CORRUGATED METAL PIPE
PVC	=	POLYVINYL CHLORIDE PIPE
HDPE	=	HIGH DENSITY POLYETHYLENE
	=	FLOW LINE
STR.	=	STRUCTURE
M.E.G. OR M.E.	=	MATCH EXISTING GRADE
TOW OR TW	=	TOP OF WALL
SSD	=	SUB-SURFACE DRAINAGE
TOC	=	TOP OF CURB
GUT	=	GUTTER
W	=	WATER LINE
G	=	GAS LINE
OHU	=	OVERHEAD UTILITY LINE
T	=	TELEPHONE LINE
E	=	ELECTRIC LINE
TBM	=	TEMPORARY BENCHMARK
XX	=	PARKING COUNT
	=	EMERGENCY SPILLWAY

DRAINAGE PLAN NOTES

1. 6" HDPE ROOF DRAIN @ 1.0% MINIMUM. START INVERT = ~745.0
2. 8" HDPE ROOF DRAIN @ 1.0% MINIMUM
3. 10' OF 4" SUBSURFACE DRAINS
4. INSTALL 10' x 20' x 1.5' REVETMENT RIP-RAP ON FILTER FABRIC
5. STORM WATER DETENTION POND.
6. PROVIDE NEENAH R-3165 STRUCTURES WITHIN THE TRUCK WELL.
7. DETENTION POND OVERFLOW FLOOD ROUTING WITH MAT. SEE PROJECT SPECIFICATIONS FOR FURTHER DETAIL.

GENERAL NOTES

1. ALL HDPE PIPE SHALL BE DUAL WALLED, HANCOR HQ, ADS N-12 PIPE OR APPROVED EQUAL
2. ALL FITTINGS AND ACCESSORIES INCLUDING BUT NOT LIMITED TO END CAPS, CLEANOUTS, REDUCERS, ETC., SHALL BE OF HDPE MATERIAL COMPARABLE WITH STORAGE PIPES
3. PROVIDE BACKFILL WITH A MINIMUM OF 4" BEDDING MATERIAL OF #8 AGGREGATE COMPACTED IN 8" LIFTS TO 95% MAXIMUM DRY DENSITY
4. VERIFY EXISTING STORM INVERT ELEVATIONS PRIOR TO STARTING NEW STORM SEWER CONNECTION
5. THE SITE DOES LIE IN A SPECIAL FLOOD HAZARD AREA 'X' AS ESTABLISHED BY THE FEDERAL EMERGENCY MANAGEMENT AGENCY - NATIONAL FLOOD INSURANCE PROGRAM, WHEN PLOTTED BY SCALE ON FLOOD INSURANCE RATE MAP #18081C0227 D, DATED AUGUST 2, 2007.

PLAN CERTIFICATE NOTE:

ORIGINAL ALTA, TOPOGRAPHY, UTILITIES, STORM SEWERS, AND ALL OTHER EXISTING CONDITIONS ITEMS WERE PREPARED BY BANNING ENGINEERING.

FINAL DRAWINGS FOR THE KROGER SITE WERE PREPARED BY WEIHE ENGINEERS, INC. AND JAMES K. SHINNEMAN. FINAL CONSTRUCTION PLANS ARE THOSE PLANS CONTAINING A FINAL REVISION DATE AFTER 02/12/2015. WEIHE ENGINEERS, INC. AND JAMES K. SHINNEMAN ACCEPT RESPONSIBILITY ONLY FOR THE KROGER SITE IMPROVEMENTS RELATED TO THE ENGINEERING WORK SHOWN ON THESE PLANS.

SCALE: 1" = 50

0 25 50 100

811 Know what's below. Call before you dig.

Within Indiana Call 811 or 800-382-5544

24 Hours a Day, 7 Days a Week.

PER INDIANA STATE LAW IC 8-1-26, IT IS AGAINST THE LAW TO EXCAVATE WITHOUT NOTIFYING THE UNDERGROUND LOCATION SERVICE TWO (2) WORKING DAYS BEFORE COMMENCING WORK.

WEIHE ENGINEERS

10505 N. College Avenue
Indianapolis, Indiana 46280
weihe.net

317 846 - 6611
800 452 - 6408
317 843 - 0546 fax

ALLAN H. WEIHE, P.E., L.S. - FOUNDER

Land Surveying | Civil Engineering
Landscape Architecture

PROJECT NO:	W14.0460	
DWG NAME:	w14046C-C600 drain.dwg	
DESIGNED BY:	RJ/RFA/AH	
DRAWN BY:	RJ/RFA/AH	
CHECKED BY:	JKS	
DATE:	02.12.2015	

REVISIONS AND NOTES	DATE	BY
SUBMITTED FOR INTIAL REVIEW	02.12.2015	BJS

JAMES K. SHINNEMAN
REGISTERED
No. 10200392
STATE OF INDIANA
PROFESSIONAL ENGINEER
NOT FOR CONSTRUCTION

JAMES K. SHINNEMAN P.E. 10200392

PREPARED FOR:

KROGER STORE J-979

KROGER MARKETPLACE - MALLORY PARKWAY AND U.S. 31

DRAINAGE PLAN

Part of the NE4 of Section 15, Township 12 North, Range 4 East, Franklin Township, Johnson County, Indiana

SHEET NO.

C6.02

PROJECT NO.

W14.0460

LOCATION: J:\2014\W14046C\Engineering\design\conset\w14046C-C600 drain.dwg
LAYOUT: C6.02
DATE/TIME: February 12, 2015 - 7:37am
PLOTTED BY: schoeffe

STORM SEWER STRUCTURE DATA TABLE

STRUCTURE NUMBER	STRUCTURE TYPE	TOP OF CASTING	CASTING TYPE	INVERT
100	END SECTION	736.66	END SECTION	INV IN = 734.50(SE)
101	MANHOLE	744.09	NEENAH R-1642	INV IN = 734.60(E) INV OUT = 734.60(NW)
102	MANHOLE	743.50	NEENAH R-4215-C	INV IN = 735.29(S) INV OUT = 735.29(W)
103	OUTLET CONTROL	742.00	NEENAH R-4215-C	INV IN = 735.40(S) INV OUT = 735.40(N)
103A	END SECTION	737.40	END SECTION	INV OUT = 735.50(N)
104	END SECTION	739.70	END SECTION	INV IN = 735.50(SW)
105	MANHOLE	742.83	NEENAH R-1642	INV IN = 735.62(S) INV OUT = 735.62(NE)
106	MANHOLE	743.99	NEENAH R-1642	INV IN = 736.68(E) INV IN = 737.67(S) INV OUT = 736.68(N)
107	MANHOLE	744.95	NEENAH R-1642	INV IN = 737.14(E) INV OUT = 737.14(W)
108	MANHOLE	744.95	NEENAH R-1642	INV IN = 737.57(E) INV OUT = 737.57(W)
109	MANHOLE	743.80	NEENAH R-3405	INV IN = 738.17(S) INV IN = 740.39(E) INV OUT = 738.17(W)
110	MANHOLE	744.05	NEENAH R-3405	INV IN = 738.50(S) INV IN = 736.53(E) INV OUT = 738.50(N)
111	MANHOLE	744.05	NEENAH R-3405	INV IN = 738.73(S) INV IN = 737.73(E) INV OUT = 738.73(N)
112	INLET TYPE E	744.05	NEENAH R-3405	INV IN = 739.17(S) INV IN = 738.17(E) INV OUT = 739.17(N)
113	INLET TYPE E	744.05	NEENAH R-3405	INV IN = 739.55(S) INV IN = 741.00(E) INV OUT = 739.55(N)
114	INLET TYPE E	744.05	NEENAH R-3405	INV IN = 740.77(E) INV OUT = 740.00(N)
115	INLET TYPE A	744.05	NEENAH R-3405	INV OUT = 741.36(W)
116	INLET TYPE A	743.90	NEENAH R-3405	INV OUT = 739.75(W)
117	INLET TYPE A	744.05	NEENAH R-3405	INV OUT = 740.00(W)
118	INLET TYPE A	744.05	NEENAH R-3405	INV OUT = 741.75(W)
119	INLET TYPE A	744.05	NEENAH R-3405	INV OUT = 741.35(W)
120	MANHOLE	744.53	NEENAH R-3287	INV IN = 738.12(S) INV OUT = 738.12(N)
121	MANHOLE	744.52	NEENAH R-3287	INV IN = 738.52(S) INV IN = 739.27(E) INV OUT = 738.52(N)
122	MANHOLE	744.52	NEENAH R-3287	INV IN = 739.11(S) INV IN = 740.00(E) INV OUT = 739.11(N)
123	MANHOLE	744.52	NEENAH R-3287	INV IN = 739.73(SE) INV IN = 740.08(SW) INV OUT = 739.73(N)
124	INLET TYPE J	745.05	NEENAH R-3287	INV IN = 740.12(E) INV OUT = 740.12(NW)
125	INLET TYPE J	745.55	NEENAH R-3287	INV IN = 740.35(E) INV OUT = 740.35(W)
126	INLET TYPE J	745.28	NEENAH R-3287	INV OUT = 740.66(W)
127	NEENAH R-3165	742.08	NEENAH TYPE-A	INV OUT = 740.38(W)
128	NEENAH R-3165	742.08	NEENAH TYPE-A	INV OUT = 740.52(W)
129	INLET TYPE E	743.95	NEENAH R-3405	INV IN = 740.00(SE) INV OUT = 737.50(W)
130	INLET TYPE E	744.15	NEENAH R-3405	INV OUT = 741.61(NW)

STORM SEWER PIPE DATA TABLE

DOWNSTREAM STRUCTURE	UPSTREAM STRUCTURE	SIZE	MATERIAL	LENGTH	SLOPE
101	100	24"	HDPE	33'	0.28%
102	101	24"	HDPE	333'	0.21%
102	103	21"	HDPE	22'	0.51%
103A	103	21"	HDPE	16'	0.67%
104	105	48"	HDPE	69'	0.17%
105	106	48"	HDPE	532'	0.20%
106	107	36"	HDPE	154'	0.30%
107	108	36"	HDPE	144'	0.30%
108	109	36"	HDPE	226'	0.27%
109	110	36"	HDPE	131'	0.25%
110	111	33"	STORM PIPE	77'	0.30%
111	112	27"	HDPE	126'	0.35%
112	113	24"	HDPE	126'	0.30%
113	114	18"	HDPE	126'	0.36%
115	109	12"	RCP	120'	0.81%
116	111	12"	RCP	120'	1.68%
117	112	12"	RCP	120'	1.52%
118	113	12"	RCP	120'	0.63%
119	114	12"	RCP	120'	0.48%
120	106	27"	HDPE	80'	0.57%
121	120	27"	HDPE	146'	0.27%
122	121	24"	HDPE	169'	0.35%
123	122	24"	HDPE	155'	0.40%
124	123	15"	HDPE	111'	0.35%
125	124	15"	HDPE	78'	0.30%
126	125	12"	HDPE	101'	0.31%
127	121	12"	HDPE	41'	2.72%
128	122	12"	HDPE	41'	1.28%
129	110	15"	HDPE	130'	0.75%
130	129	15"	RCP	33'	4.90%

PLAN CERTIFICATE NOTE:

ORIGINAL ALTA, TOPOGRAPHY, UTILITIES, STORM SEWERS, AND ALL OTHER EXISTING CONDITIONS ITEMS WERE PREPARED BY BANNING ENGINEERING.

FINAL DRAWINGS FOR THE KROGER SITE WERE PREPARED BY WEIHE ENGINEERS, INC. AND JAMES K. SHINNEMAN. FINAL CONSTRUCTION PLANS ARE THOSE PLANS CONTAINING A FINAL REVISION DATE AFTER 02/12/2015. WEIHE ENGINEERS, INC. AND JAMES K SHINNEMAN ACCEPT RESPONSIBILITY ONLY FOR THE KROGER SITE IMPROVEMENTS RELATED TO THE ENGINEERING WORK SHOWN ON THESE PLANS.

811
Know what's **below.**
Call before you dig.
Within Indiana Call
811 or 800-382-5544
24 Hours a Day, 7 Days a Week.
PER INDIANA STATE LAW IC 8-1-26, IT IS AGAINST THE LAW TO EXCAVATE WITHOUT NOTIFYING THE UNDERGROUND LOCATION SERVICE TWO (2) WORKING DAYS BEFORE COMMENCING WORK.

10505 N. College Avenue
Indianapolis, Indiana 46280
weihe.net

317 | 846 - 6611
800 | 452 - 6408
317 | 843 - 0546 *fax*

ALLAN H. WEIHE, P.E., L.S. - FOUNDER

WEIHE ENGINEERS
Land Surveying | Civil Engineering
Landscape Architecture

DATE	BY	REVISIONS AND NOTES
02.12.2015	B.K.S.	SUBMITTED FOR INITIAL REVIEW

PROJECT NO: W14.0460
DWG NAME: w14460-C600 STM prop.dwg
DESIGNED BY: R.L.W/P.A.M.
DRAWN BY: R.L.W/P.A.M.
CHECKED BY: J.K.S.
DATE: 02.12.2015

JAMES K. SHINNEMAN
REGISTERED
NO. 10200392
STATE OF INDIANA
PROFESSIONAL ENGINEER
NOT FOR CONSTRUCTION UNTIL SIGNED AND DATED

JAMES K. SHINNEMAN P.E. 10200392

PREPARED FOR:
KROGER STORE J-979

KROGER MARKETPLACE - MALLORY PARKWAY AND U.S. 31

STORM SEWER STRUCTURE DATA TABLES

Part of the NE/4 of Section 15, Township 12 North, Range 4 East, Franklin Township, Johnson County, Indiana

SHEET NO.
C6.03

PROJECT NO.
W14.0460

LOCATION: J:\2014\W14460\Engineering\design\cornet\w14460 -C600 STM prop.dwg
LAYOUT: C6.03
DATE/TIME: February 12, 2015 - 7:33am
PLOTTED BY: schoeffe

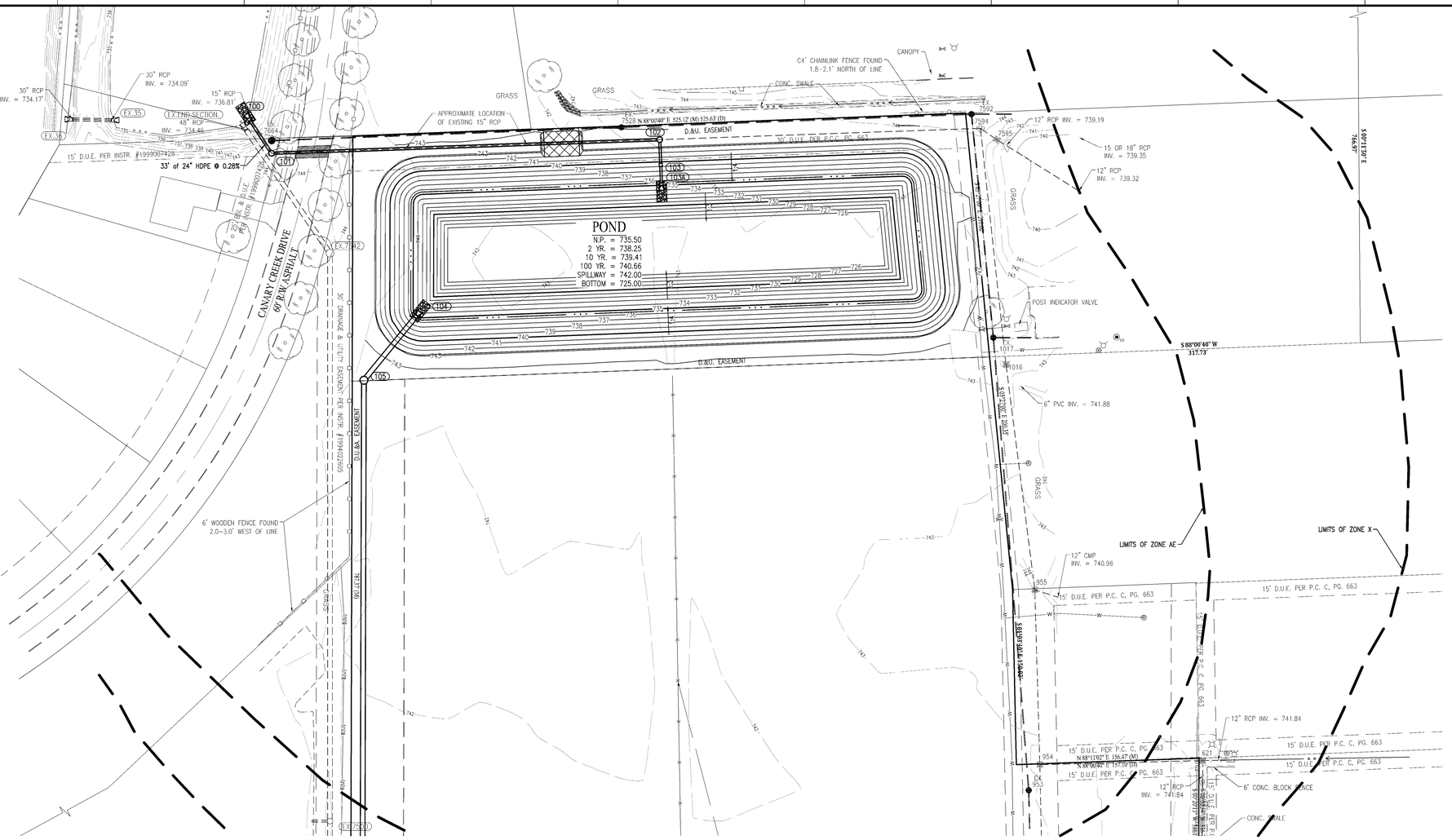

-NOTE-

RUN WATER LINE A MINIMUM OF 54" DEEP.
PROVIDE MINIMUM OF 10' HORIZONTAL & 2' VERTICAL CLEARANCE BETWEEN WATER & SANITARY LINE. SANITARY SEWER LINE IN PROXIMITY OF WATER LINE SHALL BE C900 WATER MAIN GRADE PVC.

PLAN CERTIFICATE NOTE:

ORIGINAL ALTA, TOPOGRAPHY, UTILITIES, STORM SEWERS, AND ALL OTHER EXISTING CONDITIONS ITEMS WERE PREPARED BY BANNING ENGINEERING.

FINAL DRAWINGS FOR THE KROGER SITE WERE PREPARED BY WEIHE ENGINEERS, INC. AND JAMES K. SHINNEMAN. FINAL CONSTRUCTION PLANS ARE THOSE PLANS CONTAINING A FINAL REVISION DATE AFTER 02/12/2015. WEIHE ENGINEERS, INC. AND JAMES K. SHINNEMAN ACCEPT RESPONSIBILITY ONLY FOR THE KROGER SITE IMPROVEMENTS RELATED TO THE ENGINEERING WORK SHOWN ON THESE PLANS.

VERTICAL SCALE 1" = 5'

HORIZONTAL SCALE: 1"=50'

PROFILE LEGEND
- EXISTING GRADE
- FINISHED GRADE
- GRANULAR BACKFILL

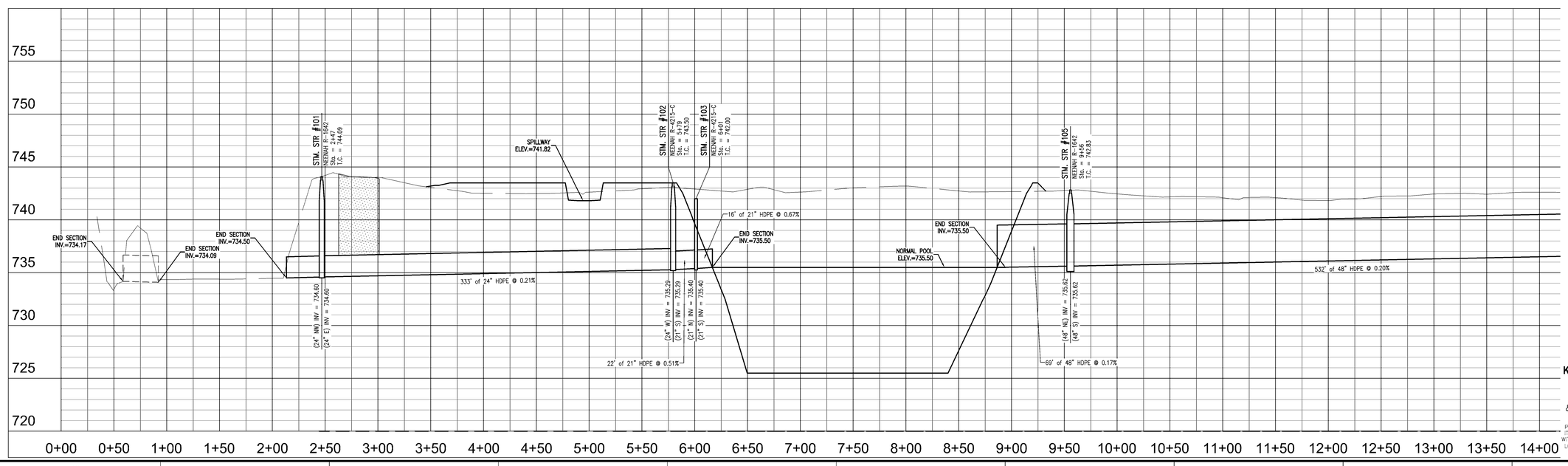

811 Know what's below. Call before you dig.
Within Indiana Call 811 or 800-382-5544
24 Hours a Day, 7 Days a Week.
PER INDIANA STATE LAW IC 8-1-26, IT IS AGAINST THE LAW TO EXCAVATE WITHOUT NOTIFYING THE UNDERGROUND LOCATION SERVICE TWO (2) WORKING DAYS BEFORE COMMENCING WORK.

10505 N. College Avenue
Indianapolis, Indiana 46280
weihe.net
317 | 846 - 6611
800 | 452 - 6408
317 | 843 - 0546 fax
ALLAN H. WEIHE, P.E., L.S. - FOUNDER

WEIHE ENGINEERS
Land Surveying | Civil Engineering
Landscape Architecture

		BY
PROJECT NO:	W14.0460	
DWG NAME:	w14460-C600 STM prp.dwg	
DESIGNED BY:	RLW/SAM	
DRAWN BY:	RLW/SAM	
CHECKED BY:	JKS	
DATE:	02.12.2015	B.JS

REVISIONS AND DATES:	DATE	BY
SUBMITTED FOR INITIAL REVIEW	02.12.2015	B.JS

JAMES K. SHINNEMAN REGISTERED NO. 10200392 STATE OF INDIANA PROFESSIONAL ENGINEER

JAMES K. SHINNEMAN P.E. 10200392

PREPARED FOR:
KROGER STORE J-979
KROGER MARKETPLACE - MALLORY PARKWAY AND U.S. 31

STORM SEWER PLAN AND PROFILE
Part of the NE/4 of Section 15, Township 12 North, Range 4 East, Franklin Township, Johnson County, Indiana

SHEET NO.
C6.04

PROJECT NO.
W14.0460

LOCATION: H:\2014\W14460\Engineering\design\const\w14460-C600 STM prp.dwg
LAYOUT: C6.04 - Profile
DATE/TIME: February 12, 2015 - 7:33am
PLOTTED BY: schoeffb

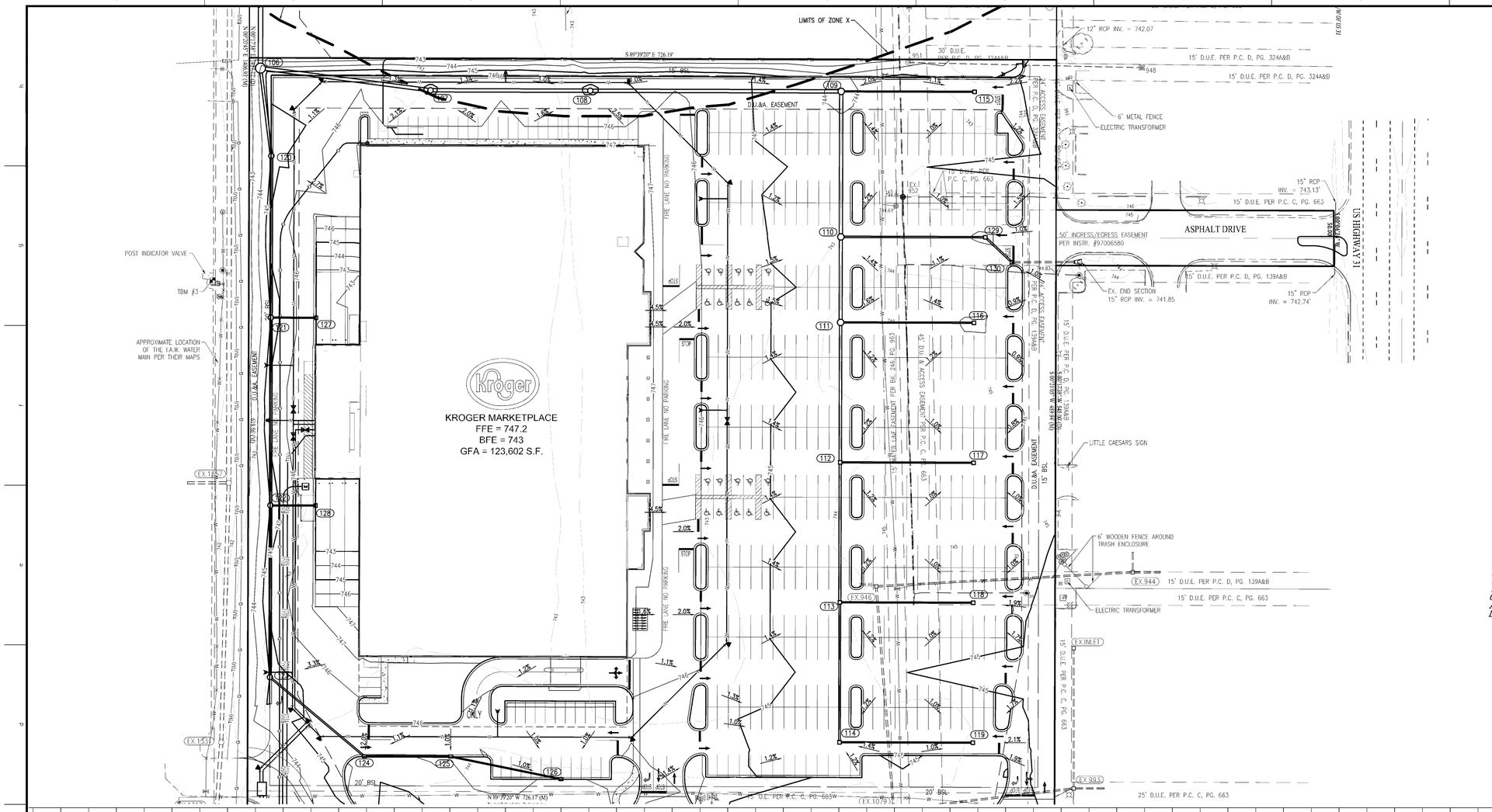

-NOTE-

RUN WATER LINE A MINIMUM OF 54" DEEP.
PROVIDE MINIMUM OF 10' HORIZONTAL & 2' VERTICAL CLEARANCE BETWEEN WATER & SANITARY LINE. SANITARY SEWER LINE IN PROXIMITY OF WATER LINE SHALL BE C900 WATER MAIN GRADE PVC.

PLAN CERTIFICATE NOTE:

ORIGINAL ALTA, TOPOGRAPHY, UTILITIES, STORM SEWERS, AND ALL OTHER EXISTING CONDITIONS ITEMS WERE PREPARED BY BANNING ENGINEERING.

FINAL DRAWINGS FOR THE KROGER SITE WERE PREPARED BY WEIHE ENGINEERS, INC. AND JAMES K. SHINNEMAN. FINAL CONSTRUCTION PLANS ARE THOSE PLANS CONTAINING A FINAL REVISION DATE AFTER 02/12/2015. WEIHE ENGINEERS, INC. AND JAMES K. SHINNEMAN ACCEPT RESPONSIBILITY ONLY FOR THE KROGER SITE IMPROVEMENTS RELATED TO THE ENGINEERING WORK SHOWN ON THESE PLANS.

VERTICAL SCALE: 1"=5'

HORIZONTAL SCALE: 1"=50'

PROFILE LEGEND

- EXISTING GRADE
- FINISHED GRADE
- GRANULAR BACKFILL

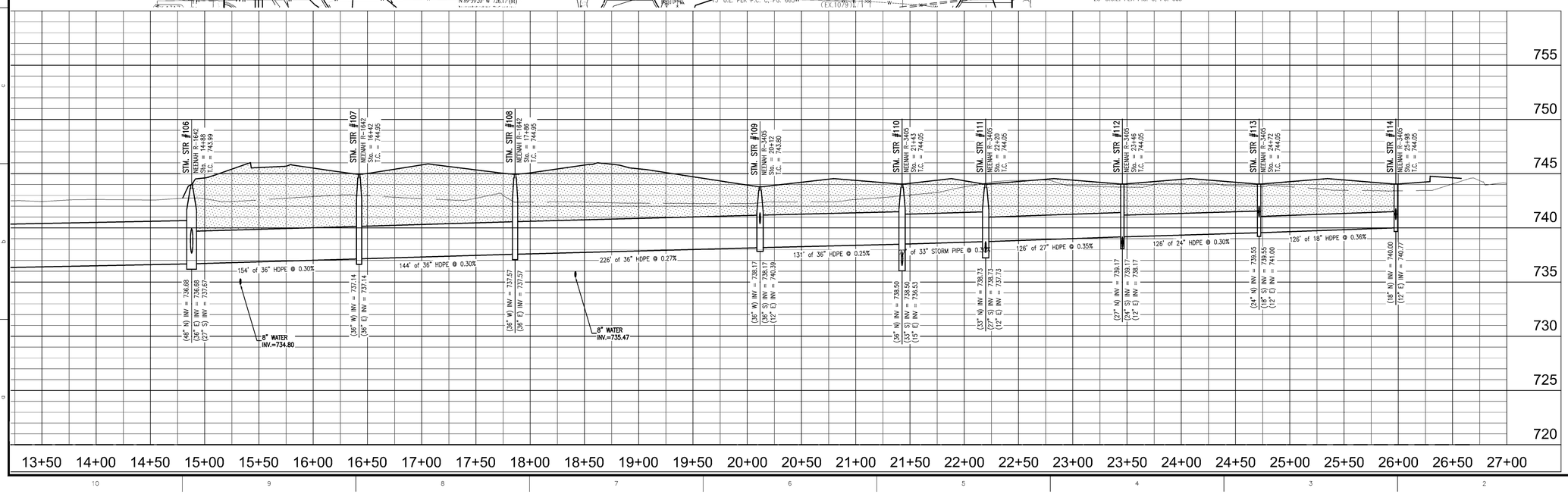

10505 N. College Avenue
Indianapolis, Indiana 46280
weihe.net

317 | 846 - 6611
800 | 452 - 6408
317 | 843 - 0546 *fax*

ALLAN H. WEIHE, P.E., L.S. - FOUNDER

WEIHE ENGINEERS

Land Surveying | Civil Engineering
Landscape Architecture

REVISIONS AND ISSUES	DATE	BY
SUBMITTED FOR INITIAL REVIEW	02.12.2015	BJS

PROJECT NO: W14.0460
DWG NAME: #140460-C600 STM prop.dwg
DESIGNED BY: RJWRAM
DRAWN BY: RJWRAM
CHECKED BY: JKS
DATE: 02.12.2015

JAMES K. SHINNEMAN
REGISTERED
NO. 10200392
STATE OF INDIANA
PROFESSIONAL ENGINEER

JAMES K. SHINNEMAN P.E. 10200392

PREPARED FOR:

KROGER STORE J-979

KROGER MARKETPLACE - MALLORY PARKWAY AND U.S. 31

STORM SEWER PLAN AND PROFILE

Part of the NE¼ of Section 15, Township 12 North, Range 4 East, Franklin Township, Johnson County, Indiana

SHEET NO.
C6.05

PROJECT NO.
W14.0460

811
Know what's **below.**
Call before you dig.
Within Indiana Call
811 or 800-382-5544
24 Hours a Day, 7 Days a Week.
PER INDIANA STATE LAW (C 8-1-26), IT IS AGAINST THE LAW TO EXCAVATE WITHOUT NOTIFYING THE UNDERGROUND LOCATION SERVICE TWO (2) WORKING DAYS BEFORE COMMENCING WORK.

LOCATION: H:\2014\W14040\Engineering\design\construct\w14040-C600 STM prop.dwg
LAYOUT: PROFILE
DATE/TIME: February 12, 2015 – 7:33am
PLOTTED BY: schoeffb

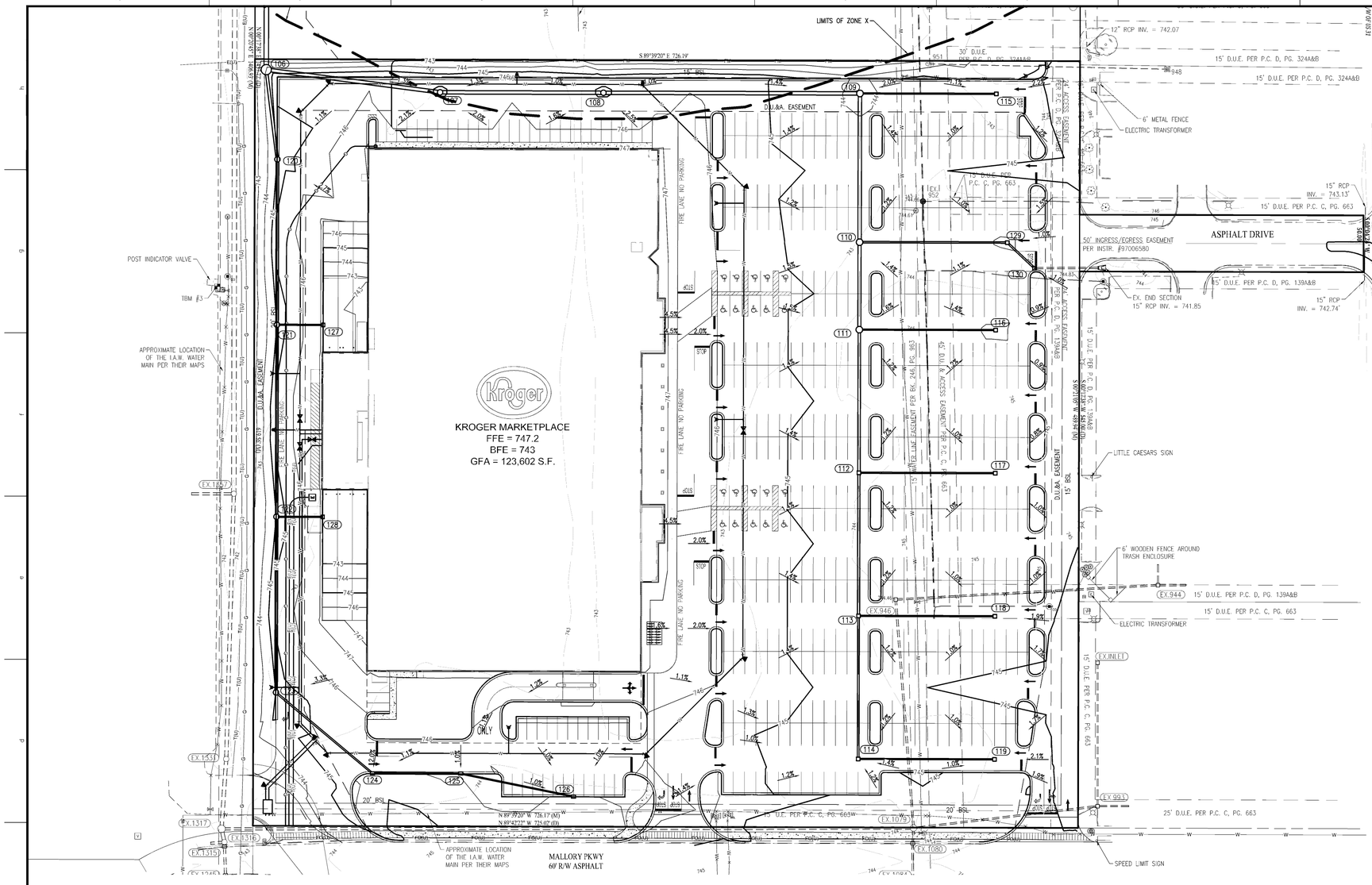

-NOTE-

RUN WATER LINE A MINIMUM OF 54" DEEP.
PROVIDE MINIMUM OF 10' HORIZONTAL & 2' VERTICAL CLEARANCE BETWEEN WATER & SANITARY LINE. SANITARY SEWER LINE IN PROXIMITY OF WATER LINE SHALL BE C900 WATER MAIN GRADE PVC.

PLAN CERTIFICATE NOTE:

ORIGINAL ALTA, TOPOGRAPHY, UTILITIES, STORM SEWERS, AND ALL OTHER EXISTING CONDITIONS ITEMS WERE PREPARED BY BANNING ENGINEERING.

FINAL DRAWINGS FOR THE KROGER SITE WERE PREPARED BY WEIHE ENGINEERS, INC. AND JAMES K. SHINNEMAN. FINAL CONSTRUCTION PLANS ARE THOSE PLANS CONTAINING A FINAL REVISION DATE AFTER 02/12/2015. WEIHE ENGINEERS, INC. AND JAMES K. SHINNEMAN ACCEPT RESPONSIBILITY ONLY FOR THE KROGER SITE IMPROVEMENTS RELATED TO THE ENGINEERING WORK SHOWN ON THESE PLANS.

VERTICAL SCALE: 1"=5'
HORIZONTAL SCALE: 1"=50'

PROFILE LEGEND

- EXISTING GRADE
- FINISHED GRADE
- GRANULAR BACKFILL

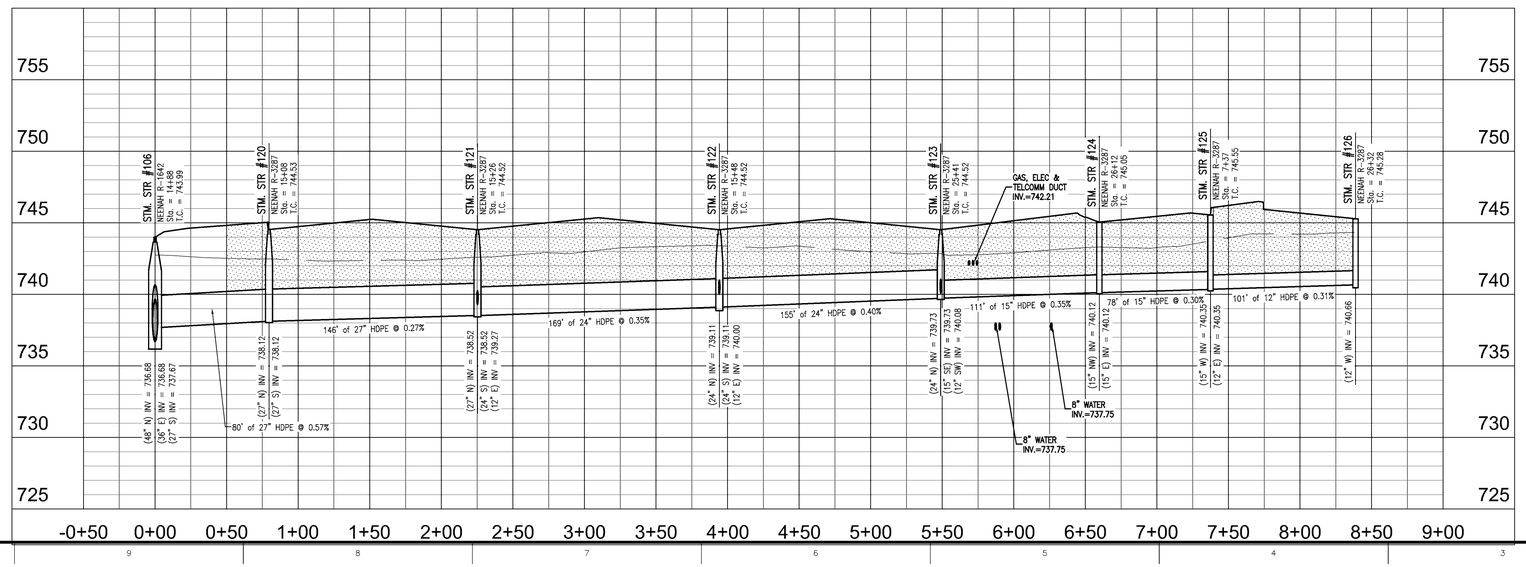

10505 N. College Avenue
Indianapolis, Indiana 46280
weihe.net

317 | 846 - 6611
800 | 452 - 6408
317 | 843 - 0546 *fax*

ALLAN H. WEIHE, P.E., L.S. - FOUNDER

WEIHE ENGINEERS
Land Surveying | Civil Engineering
Landscape Architecture

REVISIONS AND ISSUES SUBMITTED FOR INITIAL REVIEW	DATE 02.12.2015	BY BJB	PROJECT NO. W14.0460
			DWG NAME #140460-C600 STM prp.dwg
			DESIGNED BY: RJWRAM
			DRAWN BY: RJWRAM
			CHECKED BY: AKS
			DATE: 02.12.2015

JAMES K. SHINNEMAN
REGISTERED
NO. 10200392
STATE OF INDIANA
PROFESSIONAL ENGINEER

JAMES K. SHINNEMAN P.E. 10200392

PREPARED FOR:

KROGER STORE J-979

KROGER MARKETPLACE - MALLORY PARKWAY AND U.S. 31

STORM SEWER PLAN AND PROFILE

Part of the NE¼ of Section 15, Township 12 North, Range 4 East, Franklin Township, Johnson County, Indiana

SHEET NO.
C6.06

PROJECT NO.
W14.0460

811
Know what's **below.**
Call before you dig.
Within Indiana Call
811 or 800-382-5544
24 Hours a Day, 7 Days a Week.

PER INDIANA STATE LAW (C 8-1-26), IT IS AGAINST THE LAW TO EXCAVATE WITHOUT NOTIFYING THE UNDERGROUND LOCATION SERVICE TWO (2) WORKING DAYS BEFORE COMMENCING WORK.

LOCATION: J:\3-2014\W14040\Engineering\design\conset\w140460-C600 STM prp.dwg
LAYOUT: C6.06
DATE/TIME: February 12, 2015 - 7:53am
PLOTTED BY: schoeffb

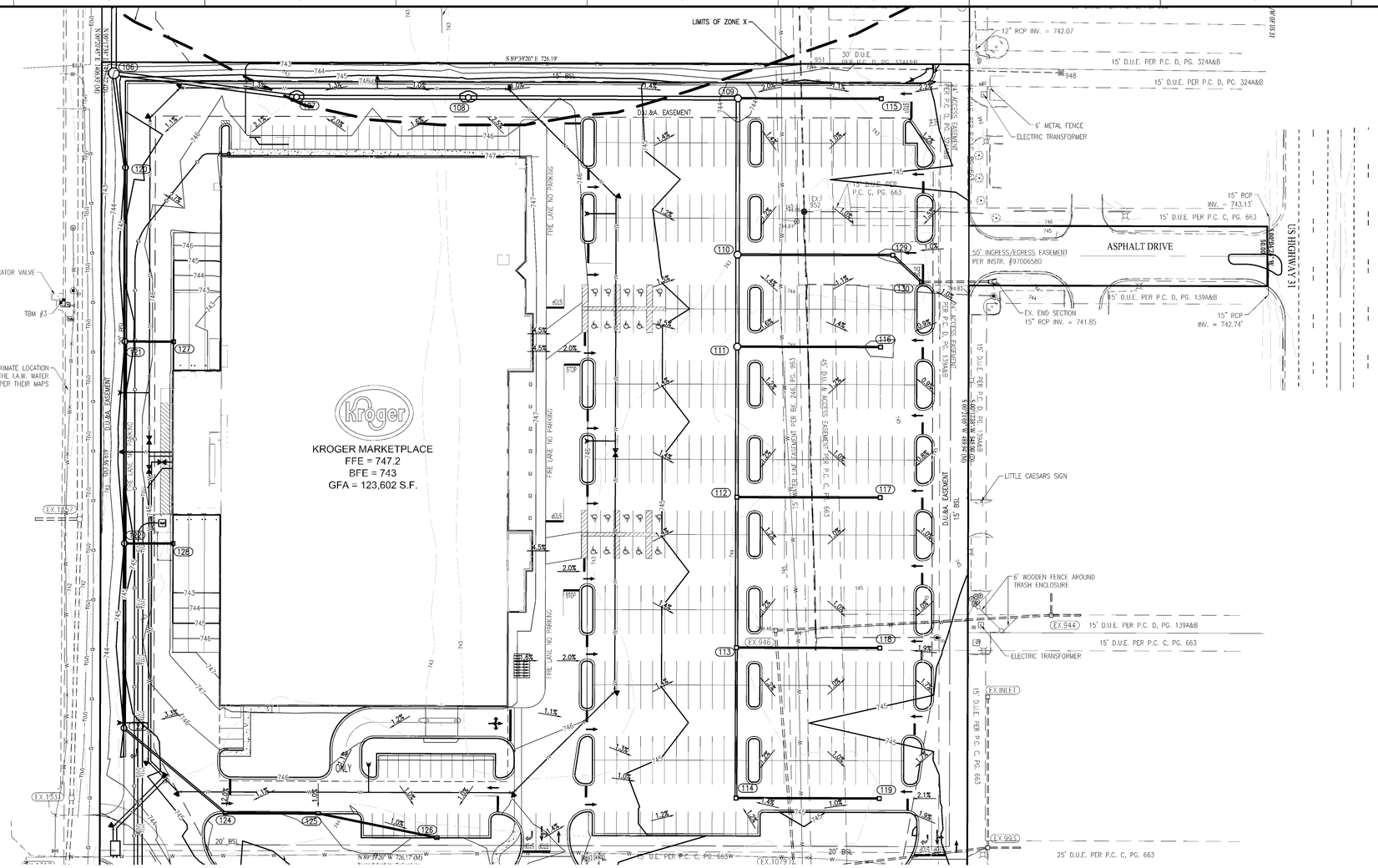

-NOTE-

RUN WATER LINE A MINIMUM OF 54" DEEP.
PROVIDE MINIMUM OF 10' HORIZONTAL & 2' VERTICAL CLEARANCE BETWEEN WATER & SANITARY LINE. SANITARY SEWER LINE IN PROXIMITY OF WATER LINE SHALL BE C900 WATER MAIN GRADE PVC.

PLAN CERTIFICATE NOTE:

ORIGINAL ALTA, TOPOGRAPHY, UTILITIES, STORM SEWERS, AND ALL OTHER EXISTING CONDITIONS ITEMS WERE PREPARED BY BANNING ENGINEERING.

FINAL DRAWINGS FOR THE KROGER SITE WERE PREPARED BY WEIHE ENGINEERS, INC. AND JAMES K. SHINNEMAN. FINAL CONSTRUCTION PLANS ARE THOSE PLANS CONTAINING A FINAL REVISION DATE AFTER 02/12/2015. WEIHE ENGINEERS, INC. AND JAMES K. SHINNEMAN ACCEPT RESPONSIBILITY ONLY FOR THE KROGER SITE IMPROVEMENTS RELATED TO THE ENGINEERING WORK SHOWN ON THESE PLANS.

VERTICAL SCALE 1"=5': 5.0, 4.0, 3.0, 2.0, 1.0, 0.0

HORIZONTAL SCALE: 1"=50'
00 25 50 75 100

PROFILE LEGEND

- EXISTING GRADE
- FINISHED GRADE
- GRANULAR BACKFILL

STM 100-3

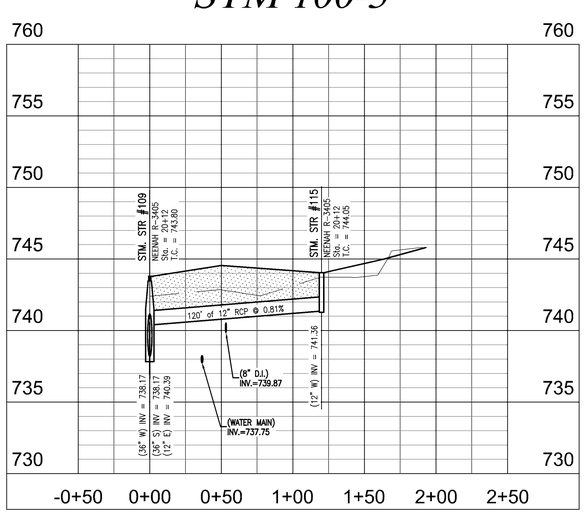

STM 100-4

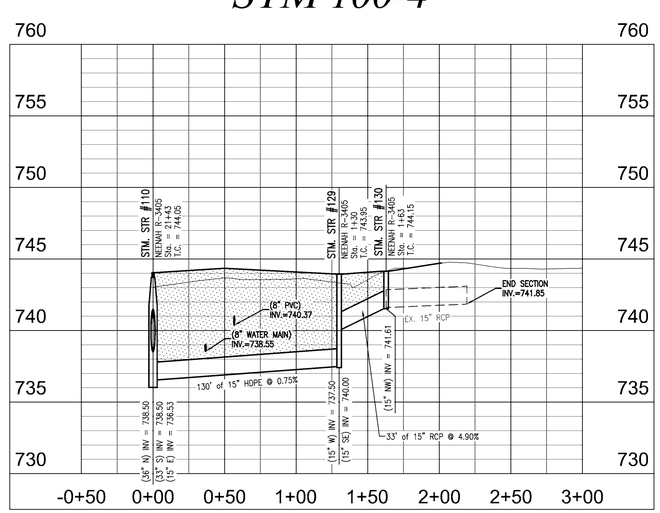

STM 100-5

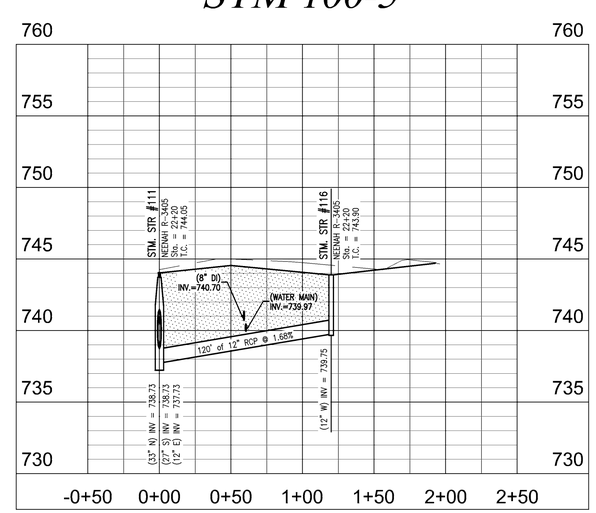

STM 100-2

Know what's **below.**
Call before you dig.
Within Indiana Call
811 or 800-382-5544
24 Hours a Day, 7 Days a Week.
PER INDIANA STATE LAW IC 8-1-26, IT IS AGAINST THE LAW TO EXCAVATE WITHOUT NOTIFYING THE UNDERGROUND LOCATION SERVICE TWO (2) WORKING DAYS BEFORE COMMENCING WORK.

10505 N. College Avenue
Indianapolis, Indiana 46280
weihe.net
317 | 846 - 6611
800 | 452 - 6408
317 | 843 - 0546 *fax*
ALLAN H. WEIHE, P.E., L.S. - FOUNDER

WEIHE ENGINEERS
Land Surveying | Civil Engineering
Landscape Architecture

PROJECT NO: W14.0460	
DWG NAME: #140460-C600 SM prp.dwg	
DESIGNED BY:	RLW/SAM
DRAWN BY:	RLW/SAM
CHECKED BY:	AKS
DATE:	02.12.2015

REVISIONS AND ISSUES	DATE	BY
SUBMITTED FOR INITIAL REVIEW	02.12.2015	RJS

JAMES K. SHINNEMAN
REGISTERED
NO. 10200392
STATE OF INDIANA
PROFESSIONAL ENGINEER
APPROVED FOR CONSTRUCTION
NOT FOR CONSTRUCTION

JAMES K. SHINNEMAN P.E. 10200392

PREPARED FOR:
KROGER STORE J-979
KROGER MARKETPLACE - MALLORY PARKWAY AND U.S. 31
STORM SEWER PLAN AND PROFILE
Part of the NE/4 of Section 15, Township 12 North, Range 4 East, Franklin Township, Johnson County, Indiana

SHEET NO.
C6.07
PROJECT NO.
W14.0460

LOCATION: J:\2014\W14.0460\Engineering\Design\cones\w14.0460-C600 STM prp.dwg
LAYOUT: C6.07
DATE/TIME: February 12, 2015 - 7:33am
PLOTTED BY: schaefer

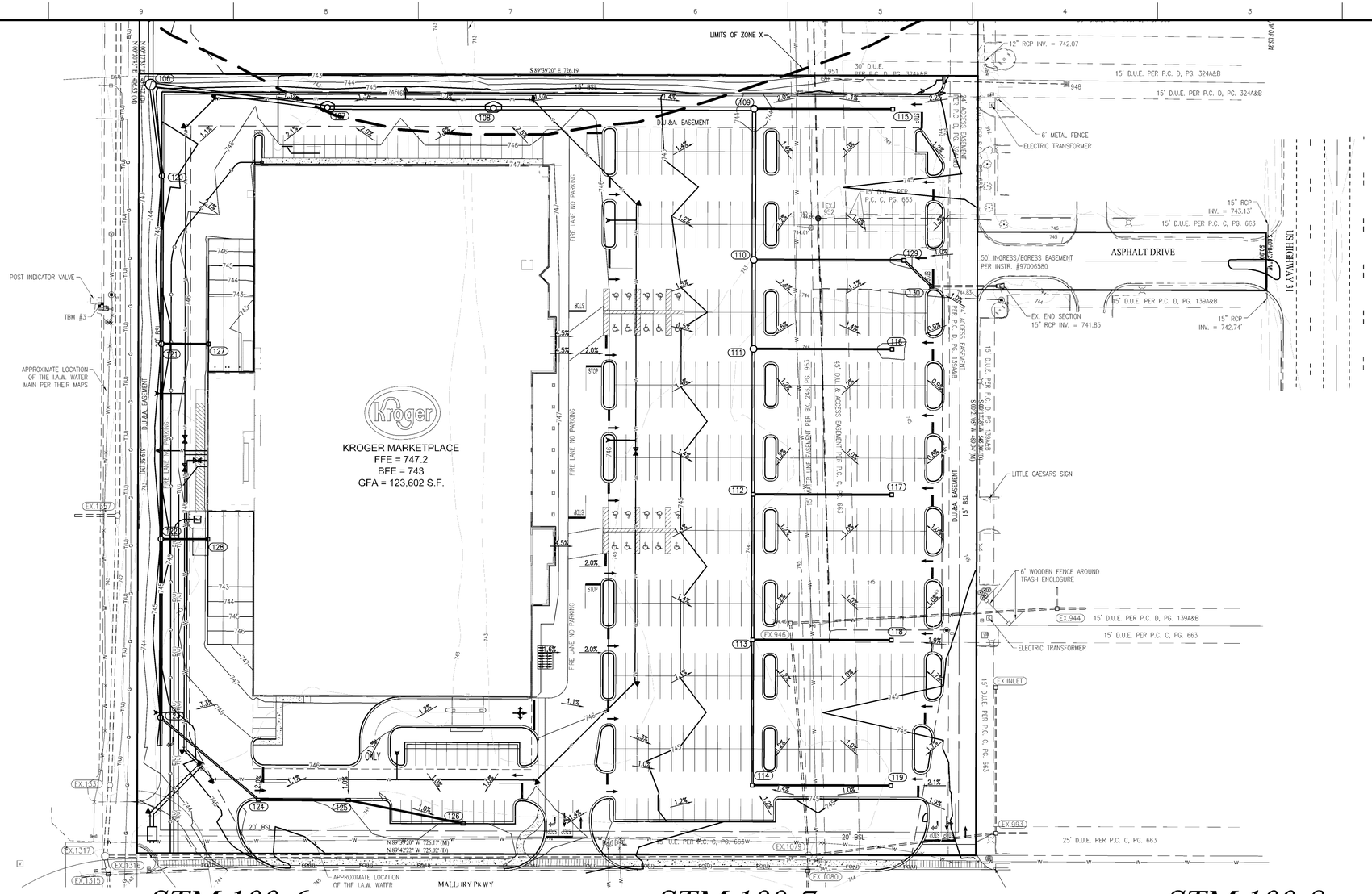

-NOTE-

RUN WATER LINE A MINIMUM OF 54" DEEP.
PROVIDE MINIMUM OF 10' HORIZONTAL & 2' VERTICAL CLEARANCE BETWEEN WATER & SANITARY LINE. SANITARY SEWER LINE IN PROXIMITY OF WATER LINE SHALL BE C900 WATER MAIN GRADE PVC.

PLAN CERTIFICATE NOTE:

ORIGINAL ALTA, TOPOGRAPHY, UTILITIES, STORM SEWERS, AND ALL OTHER EXISTING CONDITIONS ITEMS WERE PREPARED BY BANNING ENGINEERING.

FINAL DRAWINGS FOR THE KROGER SITE WERE PREPARED BY WEIHE ENGINEERS, INC. AND JAMES K. SHINNEMAN. FINAL CONSTRUCTION PLANS ARE THOSE PLANS CONTAINING A FINAL REVISION DATE AFTER 02/12/2015. WEIHE ENGINEERS, INC. AND JAMES K. SHINNEMAN ACCEPT RESPONSIBILITY ONLY FOR THE KROGER SITE IMPROVEMENTS RELATED TO THE ENGINEERING WORK SHOWN ON THESE PLANS.

VERTICAL SCALE 1=5

HORIZONTAL SCALE: 1"=50'

PROFILE LEGEND

- EXISTING GRADE
- FINISHED GRADE
- GRANULAR BACKFILL

STM 100-6

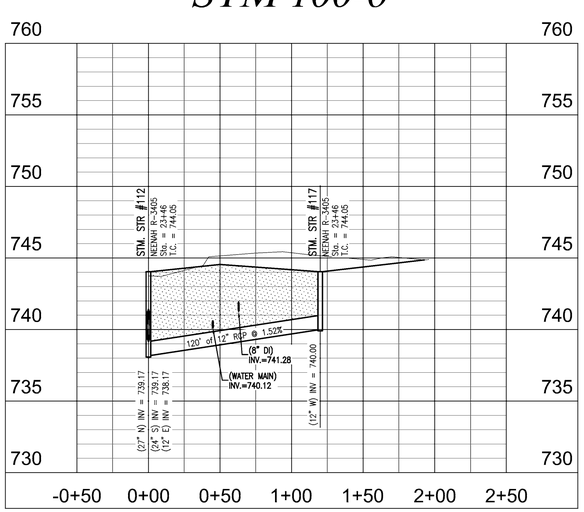

STM 100-7

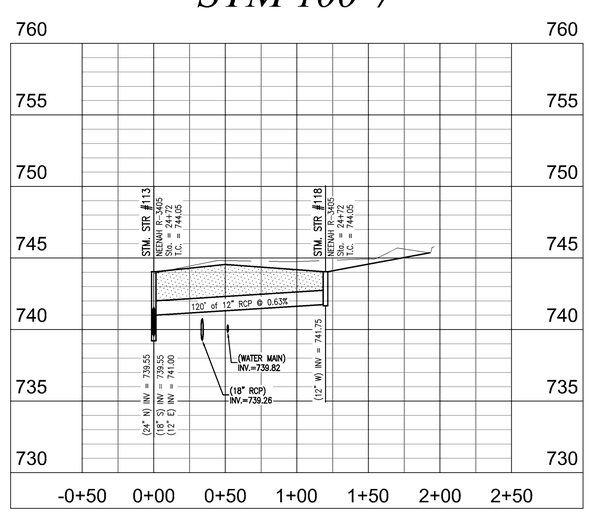

STM 100-8

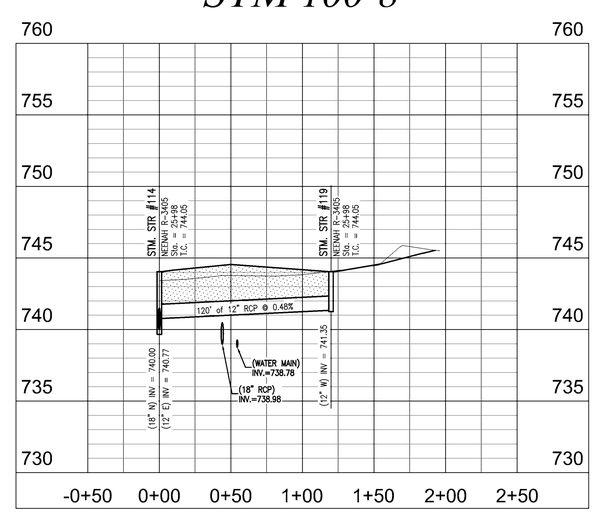

811 Know what's below. Call before you dig.

Within Indiana Call
811 or 800-382-5544
24 Hours a Day, 7 Days a Week.

PER INDIANA STATE LAW IC 8-1-26, IT IS AGAINST THE LAW TO EXCAVATE WITHOUT NOTIFYING THE UNDERGROUND LOCATION SERVICE TWO (2) WORKING DAYS BEFORE COMMENCING WORK.

10505 N. College Avenue
Indianapolis, Indiana 46280
weihe.net
317 | 846 - 6611
800 | 452 - 6408
317 | 843 - 0546 fax
ALLAN H. WEIHE, P.E., L.S. - FOUNDER

WEIHE ENGINEERS
Land Surveying | Civil Engineering
Landscape Architecture

PROJECT NO.:	W14.0460
DWG NAME:	#140460-C600 STM prop.dwg
DESIGNED BY:	RLW/RAM
DRAWN BY:	RLW/RAM
CHECKED BY:	JKS
DATE:	02.12.2015

REVISIONS AND ISSUES	DATE	BY
SUBMITTED FOR INITIAL REVIEW	02.12.2015	BJS

JAMES K. SHINNEMAN REGISTERED NO. 10200392 STATE OF INDIANA PROFESSIONAL ENGINEER
APPROVED FOR NOT FOR CONSTRUCTION

JAMES K. SHINNEMAN P.E. 10200392

PREPARED FOR:
KROGER STORE J-979
KROGER MARKETPLACE - MALLORY PARKWAY AND U.S. 31
STORM SEWER PLAN AND PROFILE
Part of the NE/4 of Section 15, Township 12 North, Range 4 East, Franklin Township, Johnson County, Indiana

SHEET NO.
C6.08

PROJECT NO.
W14.0460

LOCATION: H:\2014\W140460\Engineering\design\conset\w140460-C600 STM prop.dwg
LAYOUT: C6.08
DATE/TIME: February 12, 2015 - 7:34am
PLOTTED BY: schoeffb

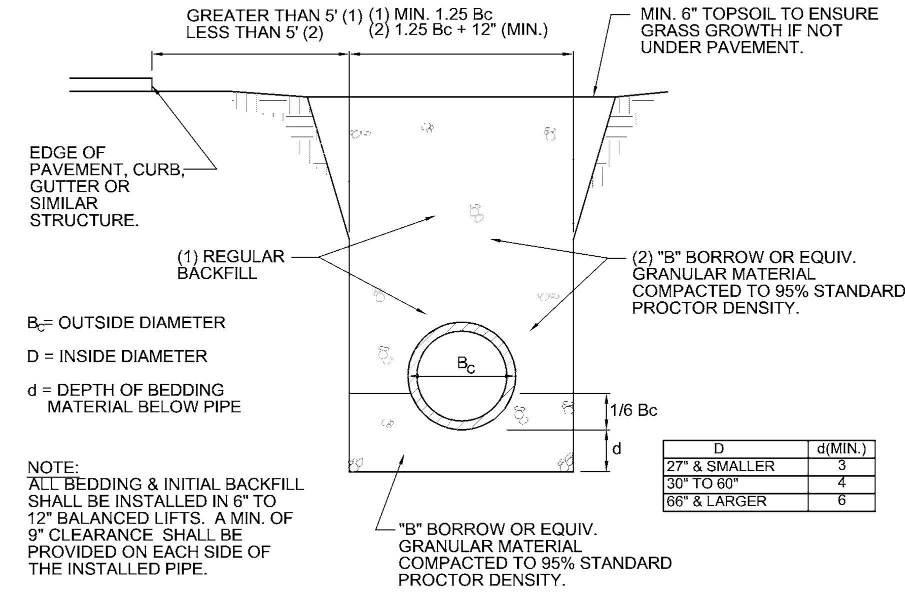

Bc= OUTSIDE DIAMETER

D = INSIDE DIAMETER

d = DEPTH OF BEDDING MATERIAL BELOW PIPE

D	d(MIN.)
27" & SMALLER	3
30" TO 60"	4
66" & LARGER	6

NOTE:
ALL BEDDING & INITIAL BACKFILL SHALL BE INSTALLED IN 6" TO 12" BALANCED LIFTS. A MIN. OF 9" CLEARANCE SHALL BE PROVIDED ON EACH SIDE OF THE INSTALLED PIPE.

TYPICAL BEDDING SECTION - RCP PIPE
(NO SCALE)

NOTE:
ALL BEDDING & INITIAL BACKFILL SHALL BE INSTALLED IN 6" TO 12" BALANCED LIFTS A MIN. 9" CLEARANCE SHALL BE PROVIDED ON EACH SIDE OF THE INSTALLED PIPE

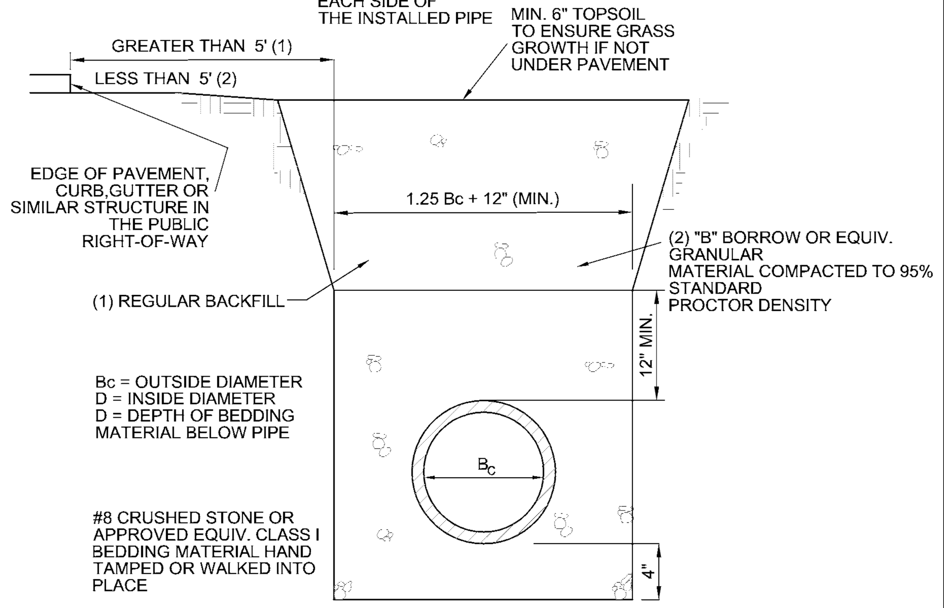

Bc = OUTSIDE DIAMETER
D = INSIDE DIAMETER
D = DEPTH OF BEDDING MATERIAL BELOW PIPE

TYPICAL BEDDING SECTION - PVC & HDPE
(NO SCALE)

PIPE SIZE (DIA. "G")	MANHOLE (DIA. "F") PIPES ENTERING/ LEAVING AT 0-45 DEGREES	MANHOLE (DIA. "F") PIPES ENTERING/ LEAVING AT 45-90 DEGREES	UP TO 60 DEGREES
12"-21"	48"	48"	N/A
24"	48"	60"	N/A
27"-30"	60"	60"	N/A
33"-36"	60"	72"	N/A
42"	72"	84"	N/A
48"	84"	96"	N/A
54"	N/A	N/A	96"
60"	N/A	N/A	96"
66"	N/A	N/A	96"

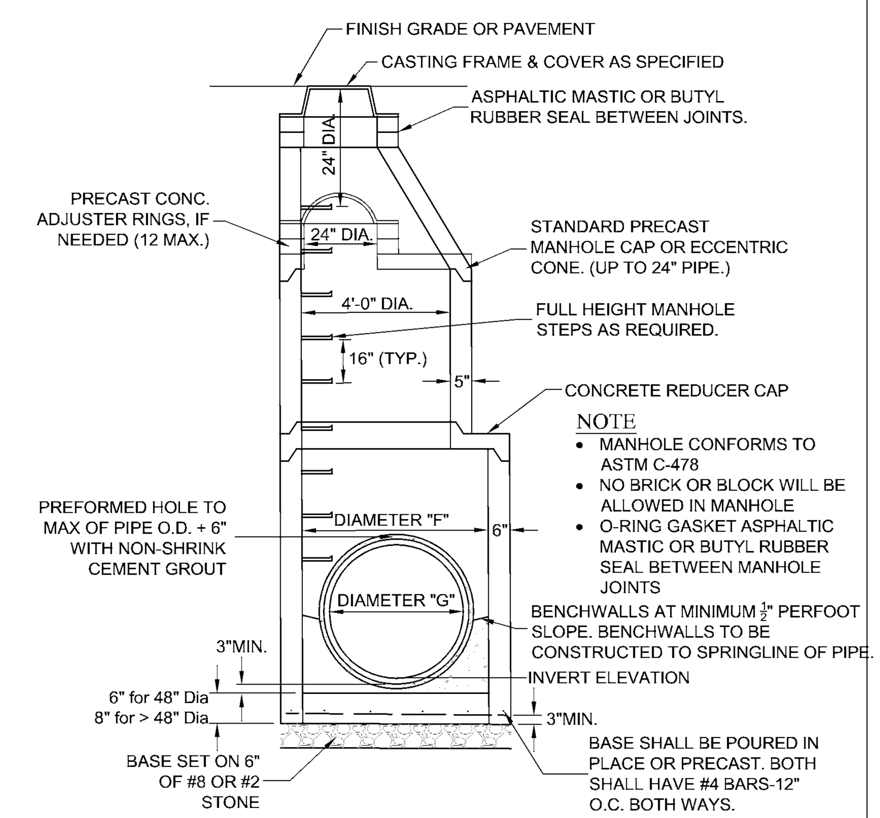

NOTE
- MANHOLE CONFORMS TO ASTM C-478
- NO BRICK OR BLOCK WILL BE ALLOWED IN MANHOLE
- O-RING GASKET ASPHALTIC MASTIC OR BUTYL RUBBER SEAL BETWEEN MANHOLE JOINTS

NOTE
MANHOLE STEPS SHALL BE POLYPROPYLENE, POLYPROPYLENE COATED STEEL REINFORCING OR AN APPROVED NON-CORROSIVE FIBERGLASS MATERIAL. THE COPOLYMER POLYPROPYLENE SHALL MEET THE REQUIREMENTS OF ASTM D-4101 REINFORCED WITH DEFORMED 3/8" MIN. DIAMETER REINFORCED STEEL CONFORMING TO THE REQUIREMENTS OF ASTM A-615, GRADE 60. NON-COATED CAST IRON STEPS ARE NOT ACCEPTABLE.

STANDARD STORM MANHOLE
(NO SCALE)

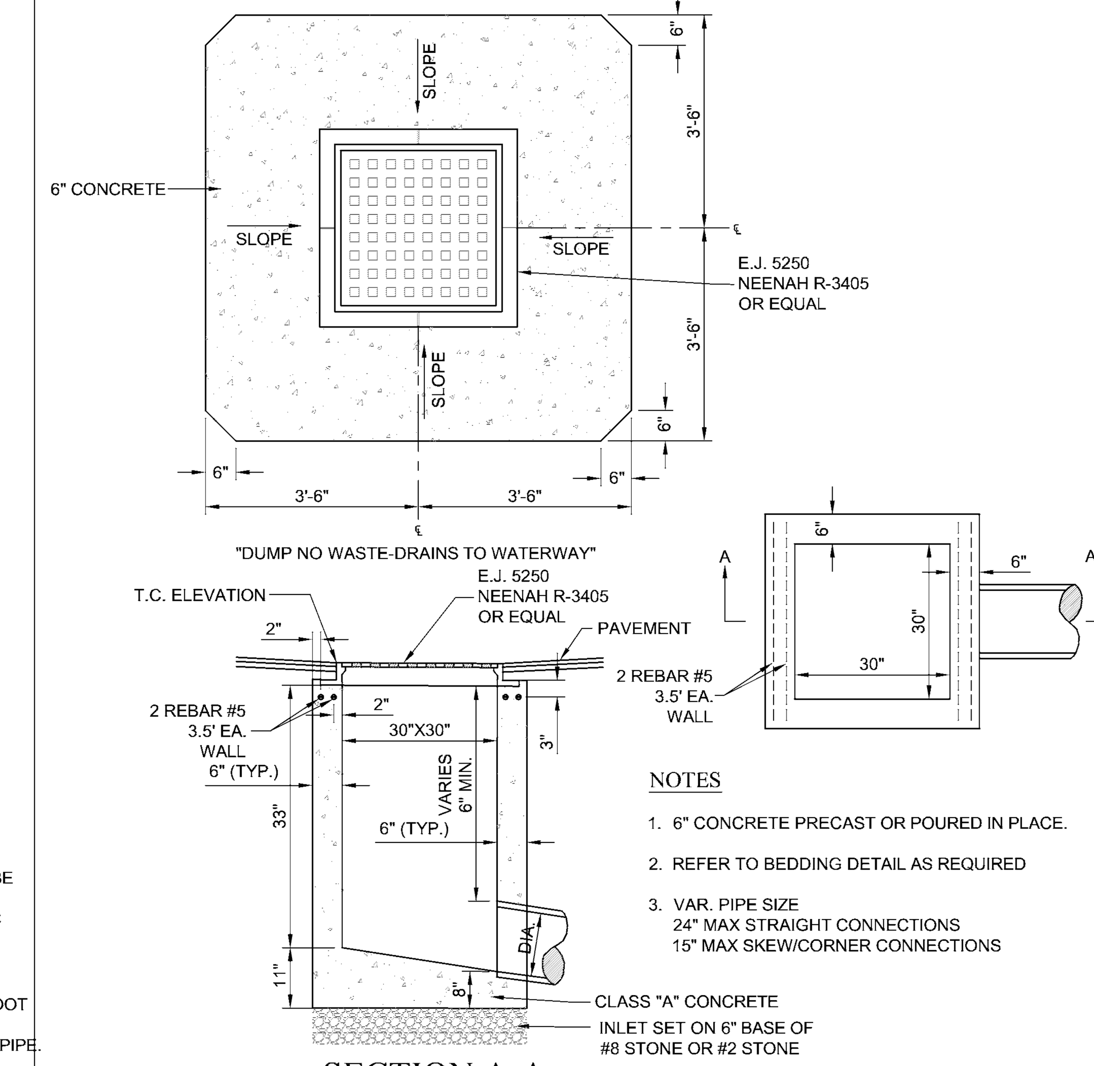

NOTES
1. 6" CONCRETE PRECAST OR POURED IN PLACE.
2. REFER TO BEDDING DETAIL AS REQUIRED
3. VAR. PIPE SIZE
24" MAX STRAIGHT CONNECTIONS
15" MAX SKEW/CORNER CONNECTIONS

SECTION A-A

1. STRAIGHT-OUT CONNECTIONS SHOULD NOT BE MADE TO EITHER PRECAST BOX OR INLET WALL TOUCHED BY A SKEW/CORNER CONNECTION UNLESS SUFFICIENT BOX INLET WALL AREA REMAINS ON EACH SIDE OF THE CONNECTING PIPE TO ENSURE STRUCTURAL INTEGRITY OF THE PRECAST BOX.
2. A MAXIMUM OF TWO (2) SKEW/CORNER CONNECTIONS WILL BE ALLOWED FOR EACH PRECAST BOX INLET.
3. REFER TO PRECAST CONCRETE ADJUSTING RING DETAIL AS REQUIRED

PAVED AREA INLET TYPE "E"
(NO SCALE)

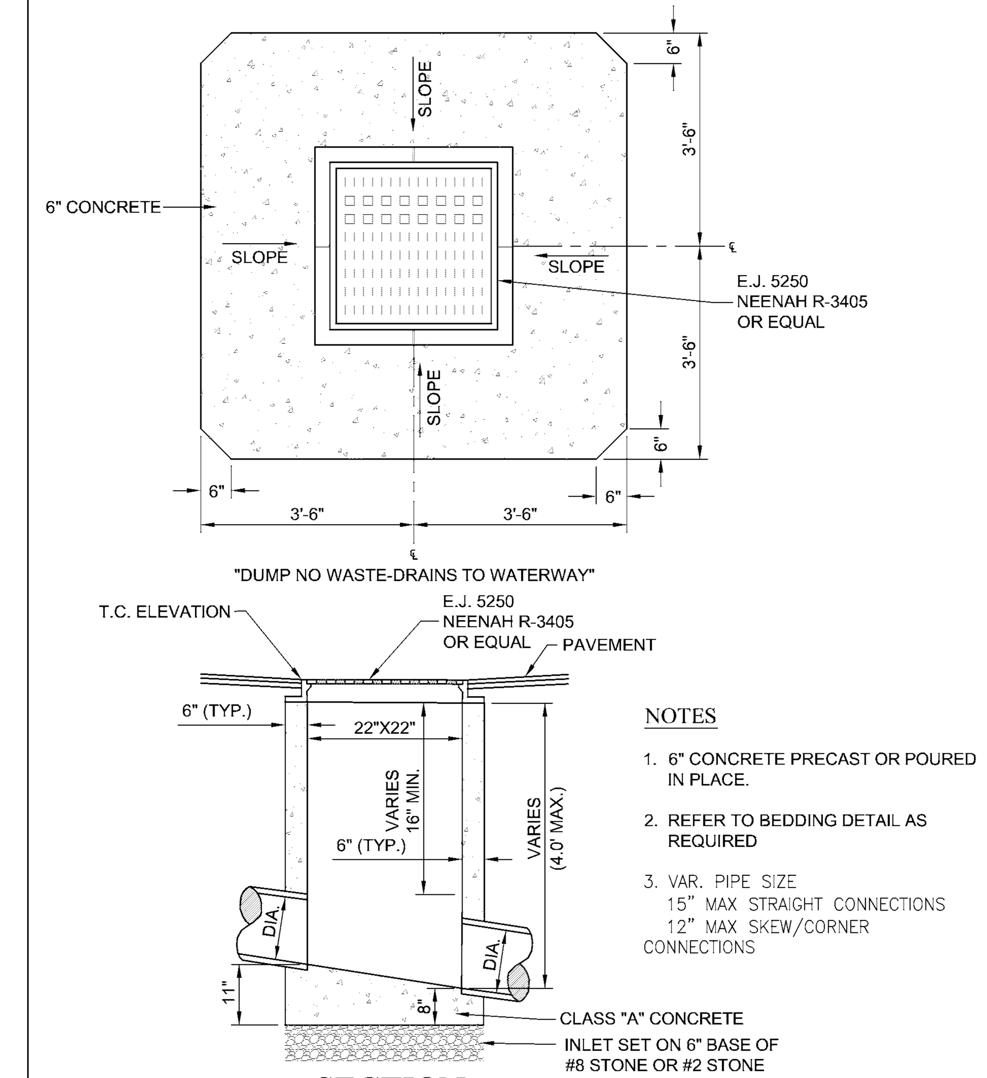

NOTES
1. 6" CONCRETE PRECAST OR POURED IN PLACE.
2. REFER TO BEDDING DETAIL AS REQUIRED
3. VAR. PIPE SIZE
15" MAX STRAIGHT CONNECTIONS
12" MAX SKEW/CORNER CONNECTIONS

SECTION

1. STRAIGHT-OUT CONNECTIONS SHOULD NOT BE MADE TO EITHER PRECAST BOX OR INLET WALL TOUCHED BY A SKEW/CORNER CONNECTION UNLESS SUFFICIENT BOX INLET WALL AREA REMAINS ON EACH SIDE OF THE CONNECTING PIPE TO ENSURE STRUCTURAL INTEGRITY OF THE PRECAST BOX.
2. A MAXIMUM OF TWO (2) SKEW/CORNER CONNECTIONS WILL BE ALLOWED FOR EACH PRECAST BOX INLET.
3. REFER TO PRECAST CONCRETE ADJUSTING RING DETAIL AS REQUIRED

PAVED AREA INLET TYPE "A"
PIPE SIZES 12" TO 15" (NO SCALE)

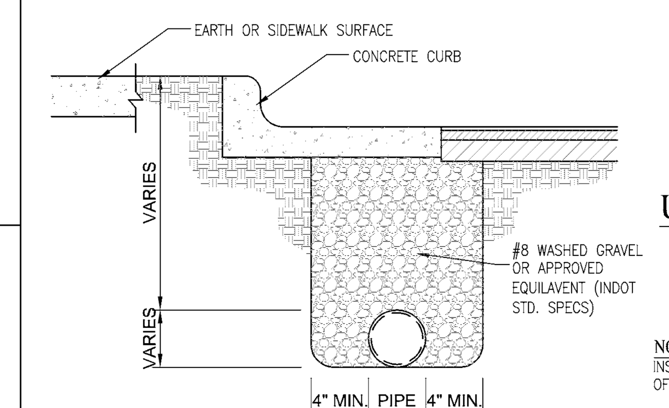

CURB UNDERDRAIN DETAIL
(NO SCALE)

NOTE:
INSTALLATION REQUIRED: BOTH SIDES OF ALL PAVEMENT.

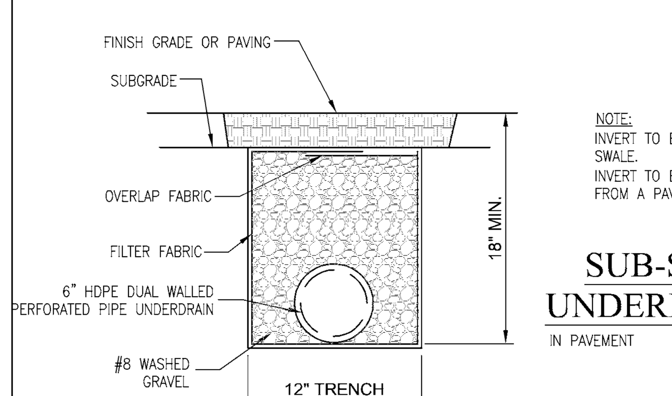

NOTE:
INVERT TO BE 18" WHEN PLACED IN SWALE.
INVERT TO BE 36" WHEN PLACED FROM A PAVED INLET.

SUB-SURFACE UNDERDRAIN TILE
IN PAVEMENT (NO SCALE)

SECTION

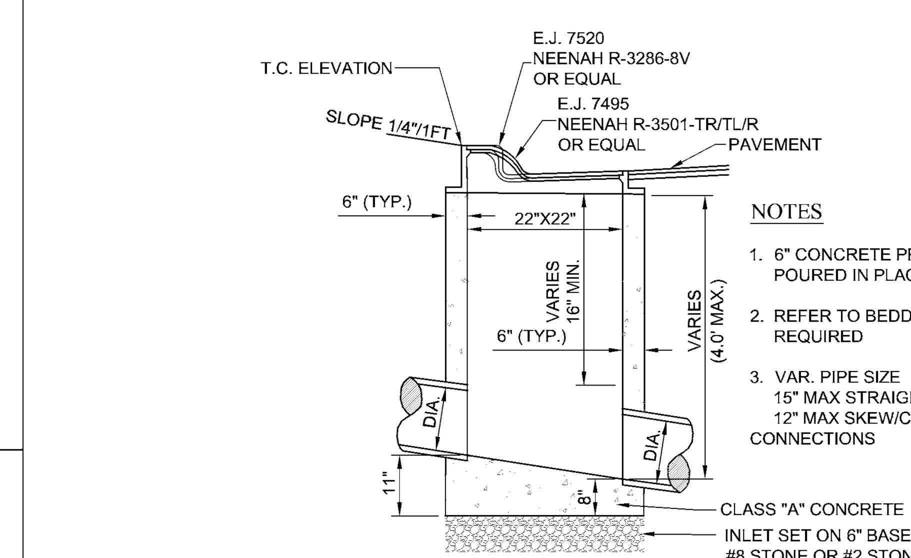

NOTES
1. 6" CONCRETE PRECAST OR POURED IN PLACE.
2. REFER TO BEDDING DETAIL AS REQUIRED
3. VAR. PIPE SIZE
15" MAX STRAIGHT CONNECTIONS
12" MAX SKEW/CORNER CONNECTIONS

"DUMP NO WASTE-DRAINS TO WATERWAY"

SECTION

1. STRAIGHT-OUT CONNECTIONS SHOULD NOT BE MADE TO EITHER PRECAST BOX OR INLET WALL TOUCHED BY A SKEW/CORNER CONNECTION UNLESS SUFFICIENT BOX INLET WALL AREA REMAINS ON EACH SIDE OF THE CONNECTING PIPE TO ENSURE STRUCTURAL INTEGRITY OF THE PRECAST BOX.
2. A MAXIMUM OF TWO (2) SKEW/CORNER CONNECTIONS WILL BE ALLOWED FOR EACH PRECAST BOX INLET.
3. REFER TO PRECAST CONCRETE ADJUSTING RING DETAIL AS REQUIRED

CURB INLET TYPE "A"
PIPE SIZES 12" TO 15" (NO SCALE)

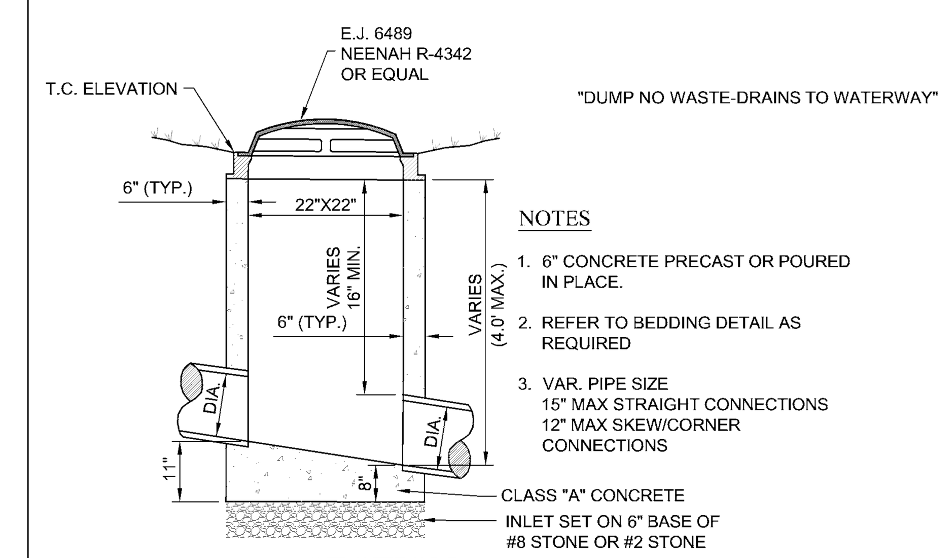

"DUMP NO WASTE-DRAINS TO WATERWAY"

NOTES
1. 6" CONCRETE PRECAST OR POURED IN PLACE.
2. REFER TO BEDDING DETAIL AS REQUIRED
3. VAR. PIPE SIZE
15" MAX STRAIGHT CONNECTIONS
12" MAX SKEW/CORNER CONNECTIONS

SECTION

1. STRAIGHT-OUT CONNECTIONS SHOULD NOT BE MADE TO EITHER PRECAST BOX OR INLET WALL TOUCHED BY A SKEW/CORNER CONNECTION UNLESS SUFFICIENT BOX INLET WALL AREA REMAINS ON EACH SIDE OF THE CONNECTING PIPE TO ENSURE STRUCTURAL INTEGRITY OF THE PRECAST BOX.
2. A MAXIMUM OF TWO (2) SKEW/CORNER CONNECTIONS WILL BE ALLOWED FOR EACH PRECAST BOX INLET.
3. REFER TO PRECAST CONCRETE ADJUSTING RING DETAIL AS REQUIRED

BEEHIVE INLET TYPE "A"
PIPE SIZES 12" TO 15" (NO SCALE)

NYLOPLAST 12" DRAIN BASIN: 2812AG _ _ X

Basin Riser is made of SDR 35 Material

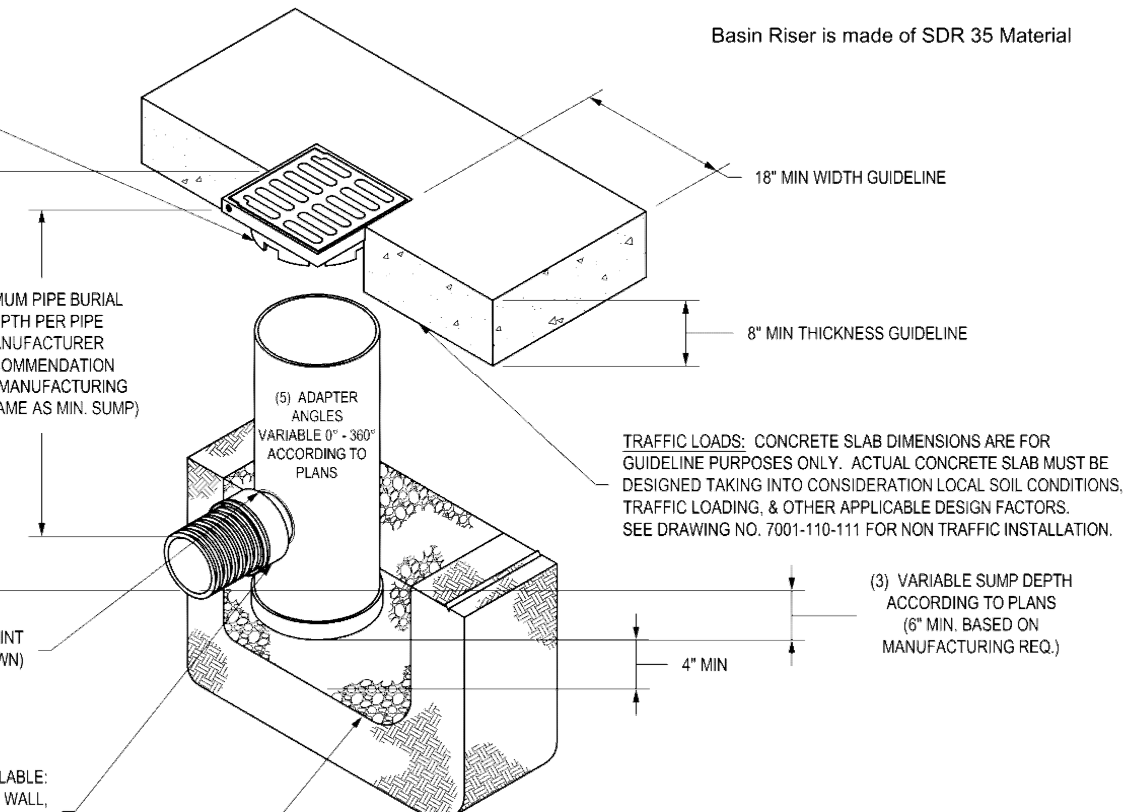

TRAFFIC LOADS: CONCRETE SLAB DIMENSIONS ARE FOR GUIDELINE PURPOSES ONLY. ACTUAL CONCRETE SLAB MUST BE DESIGNED TAKING INTO CONSIDERATION LOCAL SOIL CONDITIONS, TRAFFIC LOADING, & OTHER APPLICABLE DESIGN FACTORS. SEE DRAWING NO. 7001-110-111 FOR NON TRAFFIC INSTALLATION.

(4) VARIOUS TYPES OF INLET & OUTLET ADAPTERS AVAILABLE: 4" - 12" FOR CORRUGATED HDPE (ADS N-12/HANCOR DUAL WALL, ADS/HANCOR SINGLE WALL), N-12 HP, PVC SEWER (EX: SDR 35), PVC DWV (EX: SCH 40), PVC C900/C905, CORRUGATED & RIBBED PVC

THE BACKFILL MATERIAL SHALL BE CRUSHED STONE OR OTHER GRANULAR MATERIAL MEETING THE REQUIREMENTS OF CLASS II MATERIAL AS DEFINED IN ASTM D2321. BEDDING & BACKFILL FOR SURFACE DRAINAGE INLETS SHALL BE PLACED & COMPACTED UNIFORMLY IN ACCORDANCE WITH ASTM D2321.

1 - GRATES/SOLID COVER SHALL BE DUCTILE IRON PER ASTM A536 GRADE 70-50-05, WITH THE EXCEPTION OF THE BRONZE GRATE.
2 - FRAMES SHALL BE DUCTILE IRON PER ASTM A536 GRADE 70-50-05
3 - DRAIN BASIN TO BE CUSTOM MANUFACTURED ACCORDING TO PLAN DETAILS. RISERS ARE NEEDED FOR BASINS OVER 84" DUE TO SHIPPING RESTRICTIONS. SEE DRAWING NO. 7001-110-065
4 - DRAINAGE CONNECTION STUB JOINT TIGHTNESS SHALL CONFORM TO ASTM D3212 FOR CORRUGATED HDPE (ADS N-12/HANCOR DUAL WALL), N-12 HP, & PVC SEWER.
5 - ADAPTERS CAN BE MOUNTED ON ANY ANGLE 0° TO 360°. TO DETERMINE MINIMUM ANGLE BETWEEN ADAPTERS SEE DRAWING NO. 7001-110-012.

GRATE OPTIONS	LOAD RATING	PART #	DRAWING #
PEDESTRIAN	MEETS H-10	1299CGP	7001-110-202
STANDARD	MEETS H-20	1299CGS	7001-110-203
SOLID COVER	MEETS H-20	1299CGC	7001-110-204
PEDESTRIAN BRONZE	N/A	1299CGPB	7001-110-205
DOME	N/A	1299CGD	7001-110-206
DROP IN GRATE	LIGHT DUTY	1201DI	7001-110-021

THIS PRINT DISCLOSES SUBJECT MATTER IN WHICH NYLOPLAST HAS PROPRIETARY RIGHTS. THE RECEIPT OR POSSESSION OF THIS PRINT DOES NOT CONFER, TRANSFER, OR LICENSE THE USE OF THE DESIGN OR TECHNICAL INFORMATION SHOWN HEREIN REPRODUCTION OF THIS PRINT OR ANY INFORMATION CONTAINED HEREIN, OR MANUFACTURE OF ANY ARTICLE HEREFROM, FOR THE DISCLOSURE TO OTHERS IS FORBIDDEN, EXCEPT BY SPECIFIC WRITTEN PERMISSION FROM NYLOPLAST. ©2010 NYLOPLAST

DRAWN BY EBC	MATERIAL	Nyloplast	3130 VERONA AVE BUFORD, GA 30518 PHN (770) 932-2443 FAX (770) 932-2490 www.nyloplast-us.com
DATE 3-29-06			
REVISED BY EBC	PROJECT NO./NAME	TITLE 12 IN DRAIN BASIN QUICK SPEC INSTALLATION DETAIL	
DATE 3-10-10			
DWG SIZE A	SCALE 1:20 SHEET 1 OF 1	DWG NO. 7001-110-189	REV C

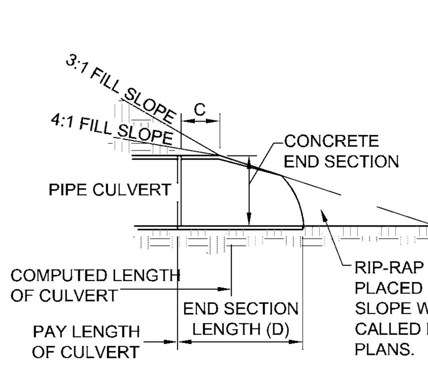

SLOPE DETAIL

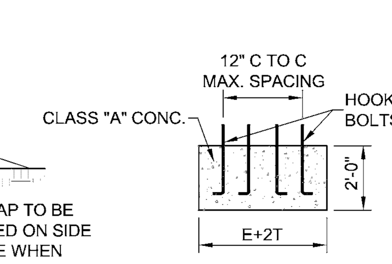

SECTION A-A CONC. PIPE TOE ANCHOR

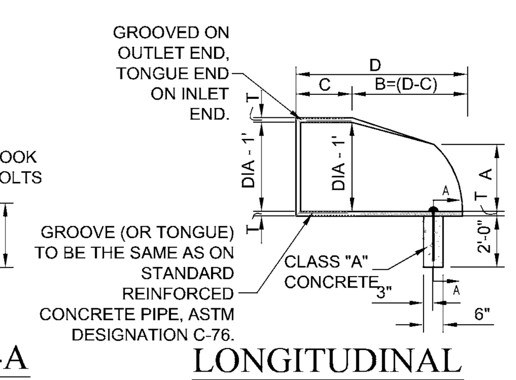

LONGITUDINAL SECTION

NOTE:
METAL PIPE END SECTIONS MAY BE USED WITH CONCRETE PIPE, PROVIDING THE METHOD OF CONNECTION IS APPROVED BY THE ENGINEER PRIOR TO INSTALLATION OF PIPE. (EXCEPT IN INDIANAPOLIS)

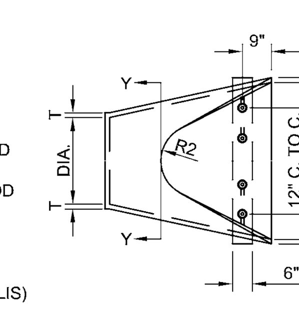

PLAN VIEW

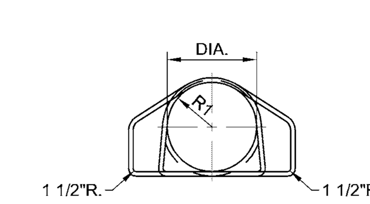

SECTION Y-Y

PRECAST CONCRETE END SECTION DETAIL
(NO SCALE)

DIA.	T (MIN)	A=	C=	D=	E=	K=	R 1	R 2	APPROX. WEIGHT
12"	2"	5"	4'-3"	6'-2"	2'-0"	1.3	10 1/8"	9"	800
15"	2 1/4"	7"	4'-0"	6'-3"	2'-6"	1.5	12 1/2"	11"	1100
18"	2 1/2"	11"	4'-1"	6'-2"	3'-0"	1.8	15 1/2"	12"	1300
21"	2 3/4"	11"	3'-6"	6'-3"	3'-6"	2.1	16 1/8"	13"	1500
24"	3"	1'-0"	2'-8"	6'-3"	4'-0"	2.3	16 3/16"	14"	1800
27"	3 1/4"	1'-1"	2'-5"	6'-3"	4'-6"	2.6	18 9/16"	14 1/2"	2100
30"	3 1/2"	1'-2"	1'-10"	6'-3"	5'-0"	2.9	18 1/2"	15"	2400
33"	3 3/4"	1'-3"	3'-6"	8'-3"	5'-6"	3.1	23 3/4"	17 1/2"	4100
36"	4"	1'-5"	3'-1"	8'-3"	6'-0"	3.4	24 5/16"	20"	4200
TOLERANCE ± 1"									

CONCRETE IN THESE END SECTIONS SHALL BE THE SAME GRADE AND STRENGTH AS SPECIFIED FOR REINFORCED CONCRETE PIPE, A.S.T.M. DESIGNATION C-76 CLASS II, (AS SET OUT IN INDOT STANDARD SPECIFICATIONS).

REINFORCEMENT IN THE "C" PORTION SHALL BE THE SAME AS SPECIFIED FOR REINFORCED CONCRETE, A.S.T.M. DESIGNATION C-76 CLASS II, FOR THE SIZE OF CONNECTING PIPE.

REINFORCEMENT IN THE "B" PORTION SHALL HAVE A CROSS SECTIONAL AREA EQUAL TO THAT OF ONE LAYER OF STEEL IN THE "C" PORTION.

THE END OF THE PIPE CULVERT SHALL BE PLACED IN THE CONCRETE END SECTION SO THAT THE FLOW LINES ARE FLUSH. THE JOINT SHALL BE COMPLETELY FILLED WITH MORTAR.

IN 3:1 OR 4:1 FILL SLOPE, CHANGE TO THE SLOPE OF THE END SECTION IN A SMOOTH, PLEASING TRANSITION APPROXIMATELY 10'-0" IN LENGTH.

VARIATIONS IN DIMENSIONS - THE THICKNESS OF THE CONCRETE, THE POSITION OF STEEL, AND THE INTERNAL DIAMETER OF THE PIPE SHALL CONFORM WITH THE VARIATIONS IN DIMENSIONS AS PROVIDED IN THE SPECIFICATIONS FOR REINFORCED CONCRETE CULVERT, STORM DRAIN, AND SEWER PIPE, A.S.T.M. DESIGNATION C-???

WHERE VITRIFIED CLAY CULVERT OR CAST IRON CULVERT PIPE IS USED, A "PIPE END SECTION" COMPARABLE TO THAT AS SHOWN FOR METAL OR CONCRETE SHALL BE FURNISHED AND SHALL BE AS APPROVED BY THE ENGINEER, EXCEPT IN AREAS OF ACID OR MINE WATER THEN THE USE OF METAL END SECTION IS PROHIBITED.

END SECTIONS WILL BE PAID FOR AT THE CONTRACT UNIT PRICE EACH FOR "PIPE END SECTION" COMPLETE.

CONCRETE PIPE TOE ANCHORS SHALL BE REQUIRED ON ALL CONCRETE PIPE END SECTIONS. THE COST THEREOF SHALL BE INCLUDED IN THE CONTRACT UNIT PRICE PER EACH FOR "PIPE END SECTION."

REQUIREMENTS FOR ALL STORM SEWER BENCH WALLS

BENCH WALLS SHALL BE SHAPED AND FORMED FOR A CLEAN TRANSITION WITH PROPER HYDRAULICS TO ALLOW THE SMOOTH CONVEYANCE OF FLOWS THROUGH THE MANHOLE OR BOX INLET. THE BENCH WALL SHALL FORM A DEFINED CHANNEL, TO A MINIMUM HEIGHT OF 80-PERCENT OF THE INSIDE DIAMETER OF THE INLET AND OUTLET PIPES TO FORM A "U" SHAPED CHANNEL, CONSTRUCTED AT A MINIMUM ½-INCH PER FOOT SLOPE TO THE MANHOLE WALL.

WHERE A FLOW CHANNEL IS CONSTRUCTED AS AN INTEGRAL PART OF THE PRE-CAST BASE, IT SHALL BE SHAPED AND FORMED AS DESCRIBED ABOVE, WITH THE EXCEPTION THAT THE BOTTOM OF THE FLOW CHANNEL MAY BE FORMED FROM THE BOTTOM OF INLET AND OUTLET PIPES IF THE PIPE WALL THICKNESS IS NOT GREATER THAN ONE (1) INCH.

FOR CAST-IN-PLACE FLOW CHANNELS, THE BOTTOM INVERT OF ALL PIPES ENTERING A MANHOLE SHALL BE AT LEAST THREE (3) INCHES ABOVE THE TOP OF THE BASE SLAB TO THE OUTLET INVERT SO THE FINISHED SEWER CHANNEL MAY BE INSTALLED AND SHAPED.
FOR CONNECTIONS TO EXISTING STORM SEWER STRUCTURES, FLOW CHANNELS SHALL BE SHAPED, AS SPECIFIED HEREIN, AS IF IT WERE A NEW MANHOLE OR BOX INLET STRUCTURE.

SPECIFICATIONS FOR ALL STORM SEWER CASTINGS

ALL STORM WATER INLETS AND CATCH BASINS SHALL HAVE THE WORDS "NO DUMPING, DRAINS TO STREAM", OR SIMILARLY APPROVED MESSAGE, CAST IN RAISED OR RECESSED LETTERS AT A MINIMUM OF 1" IN HEIGHT. IN ADDITION, A SYMBOL OF A FISH SHALL ALSO BE CAST WITH THE LETTERS.

10505 N. College Avenue
Indianapolis, Indiana 46280
weihe.net
317 | 846 - 6611
800 | 452 - 6408
317 | 843 - 0546 fax
ALLAN H. WEIHE, P.E., L.S. - FOUNDER
WEIHE ENGINEERS
Land Surveying | Civil Engineering
Landscape Architecture

PROJECT NO.: W14.0460
DWG NAME: w140460-C600 details.dwg
DESIGNED BY: RLW/RAM
DRAWN BY: RLW/RAM
CHECKED BY: JKS
DATE: 02.12.2015

DATE	BY	REVISIONS AND ISSUES
02.12.2015	BJS	SUBMITTED FOR INITIAL REVIEW

JAMES K. SHINNEMAN REGISTERED No. 10200392 STATE OF INDIANA PROFESSIONAL ENGINEER
APPROVAL PENDING NOT FOR CONSTRUCTION
JAMES K. SHINNEMAN P.E. 10200392

PREPARED FOR:
KROGER STORE J-979
KROGER MARKETPLACE - MALLORY PARKWAY AND U.S. 31
DRAINAGE DETAILS
Part of the NE/4 of Section 15, Township 12 North, Range 4 East, Franklin Township, Johnson County, Indiana

SHEET NO.
C6.09

PROJECT NO.
W14.0460

LOCATION: H:\2014\W140460\Engineering\design\conset\w140460-C600 details.dwg
LAYOUT: C6.09
DATE/TIME: February 12, 2015 - 7:34am
PLOTTED BY: schoeffb

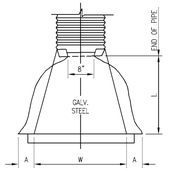

PLAN

PIPE ARCH DIMEN.		G.A.	DIMENSIONS						SLOPE (APP.)	BODY
SPAN	RISE		A 1"±	B	H MAX.	L 1.5"±	W 2"±			
17	13	16	6.5	8.5	6	20	30		2.5	1 PC.
21	15	16	7.5	11	6	24	36		2.5	1 PC.
24	18	16	8	12	6	28	42		2.5	1 PC.
28	20	16	8	16	6	32	48		2.5	1 PC.
35	24	14	10	16	6	39	60		2.5	1 PC.
42	29	14	12	12	7.5	46	75		2.5	1 PC.

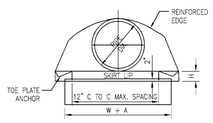

END

PIPE DIA.	G.A.	DIMENSIONS						SLOPE (APP.)	BODY
		A 1"±	B MAX.	H 1"±	L 1.5"±	W 2"±			
12	16	6	6	6	21	24		2.5	1 PC.
15	16	7	8	6	26	30		2.5	1 PC.
18	16	8	10	6	31	36		2.5	1 PC.
21	16	9	12	6	36	42		2.5	1 PC.
24	16	10	13	6	41	48		2.5	1 PC.
30	14	12	16	8	51	60		2.5	1 PC.
36	14	14	19	9	60	72		2.5	1 PC.

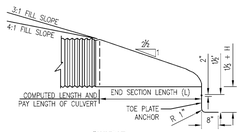

SIDE

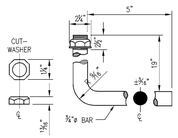

METAL END SECTION
(NO SCALE)

NOTES:

1. END SECTIONS AND TOE PLATE ANCHORS SHALL CONFORM TO ALL APPLICABLE REQUIREMENTS AS SET OUT IN THE INDOT STANDARD SPECIFICATIONS.
2. IF ALUMINUM ALLOY PIPE CULVERT IS FURNISHED, ALUMINUM ALLOY END SECTIONS SHALL ALSO BE USED AND ALL COMPONENT PARTS SHALL BE ALUMINUM ALLOY AS SET OUT IN THE STANDARD SPECIFICATIONS.
3. MULTIPLE PANEL BODIES SHALL HAVE LAP SEAMS WHICH SHALL BE TIGHTLY JOINED WITH 3/8" DIA. GALVANIZED RIVETS OR BOLTS. THE TOE PLATE ANCHOR SHALL BE CONSTRUCTED OF 10 GAGE.
4. GALVANIZED STEEL AND BE REQUIRED ON ALL STEEL PIPE END SECTIONS. IT SHALL BE MATCHED-PUNCHED TO FIT HOLES IN SKIRT LIP, AND SUPPLIED LOOSE, COMPLETE WITH 3/8" DIA. GALVANIZED BOLTS. COST THEREOF SHALL BE INCLUDED IN THE CONTRACT UNIT PRICE PER EACH FOR "PIPE END SECTION."
5. WHERE VITRIFIED CLAY CULVERT OR CAST IRON CULVERT PIPE IS USED A "PIPE END SECTION" COMPARABLE TO THAT AS SHOWN FOR METAL OR CONCRETE SHALL BE FURNISHED AND SHALL BE AS APPROVED BY THE ENGINEER.
6. END SECTIONS WILL BE PAID FOR AT THE CONTRACT UNIT PRICE EACH FOR "PIPE END SECTION" COMPLETE IN PLACE AND ACCEPTED.
7. PIMPLED CONNECTION BAND MAY BE USED TO CONNECT PIPE END SECTION TO HELICALLY CORRUGATED PIPE.
8. MECHANICAL RESTRAINTS TO BE USED PER LOCAL REQUIREMENTS.

SPECIFICATIONS FOR HOOK BOLT AND NUT:

HOOK BOLT MATERIAL SHALL MEET THE CURRENT A.S.T.M. A-307. THREADS SHALL BE AMERICAN STANDARD COARSE THREAD SERIES, CLASS II FREE FIT, BOLTS SHALL BE GALVANIZED TO MEET CURRENT A.S.T.M. SPECIFICATION A-153. THE THREADED PORTION SHALL NOT PREVENT TURNING THE NUT BY HAND. NUT AND WASHERS SHALL BE CARBON STEEL HOT DIP GALVANIZED TO MEET A.S.T.M. SPECIFICATION A-153. NUT THREADS SHALL BE AMERICAN STANDARD COARSE THREAD SERIES (1/64 MAXIMUM OVERSIZE), CLEANED AFTER GALVANIZING TO PROVIDE A FREE RUNNING FIT ON THE CLASS II BOLT. NUTS SHALL BE 1 1/4" ACROSS FLATS, 13/16" THICK, CURVE CROWNED TO APPROX. 1" RADIUS.

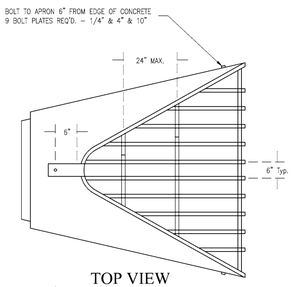

TOP VIEW

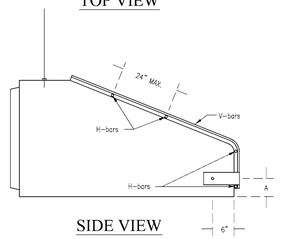

SIDE VIEW

	Apron Size	V-bar Size	H-bar Size	No. of H-bars Req'd.	Bolt Dia.	"A" Dim.
		Inches			Inches	
Arch Pipe Aprons	18	1/2 ø	5/8 ø	3	1/2	5
	24	5/8 ø	3/4 ø	4	1/2	7
	30	5/8 ø	3/4 ø	4	1/2	7 1/2
	36	3/4 ø	1 ø	4	1/2	10 1/2
	42	3/4 ø	1 ø	4	3/4	11
	48	3/4 ø	1 1/2 Pipe	4	3/4	12
	54	3/4 ø	1 1/2 Pipe	4	3/4	12
	60	3/4 ø	1 1/2 Pipe	5	3/4	14
	72	3/4 ø	1 1/2 Pipe	5	3/4	14
	84	3/4 ø	1 1/2 Pipe	6	3/4	15
Round Pipe Aprons	12	1/2 ø	5/8 ø	3	1/2	4
	15	1/2 ø	5/8 ø	3	1/2	4 1/2
	18	1/2 ø	5/8 ø	4	1/2	4 1/2
	21	1/2 ø	5/8 ø	4	1/2	5
	24	5/8 ø	3/4 ø	4	1/2	5
	27	5/8 ø	3/4 ø	4	1/2	5 1/2
	30	5/8 ø	3/4 ø	4	1/2	5 1/2
	36	3/4 ø	1 ø	4	3/4	8
	42	3/4 ø	1 ø	4	3/4	8
	48	3/4 ø	1 ø	5	3/4	8
	54	3/4 ø	1 1/2 Pipe	5	3/4	8
	60	3/4 ø	1 1/2 Pipe	5	3/4	8
	66	3/4 ø	1 1/2 Pipe	6	3/4	8
	72	3/4 ø	1 1/2 Pipe	6	3/4	9
	84	3/4 ø	1 1/2 Pipe	7	3/4	10
	90	3/4 ø	1 1/2 Pipe	7	3/4	14

NOTES:
1. BARS & PLATES ARE HOT-ROLLED STEEL.
2. BARS, PLATES, & PIPE ARE FINISHED WITH 2 COATS OF ALUMINUM PAINT.
3. BOLTS ARE GALVANIZED.
4. NO REBAR THROUGH PIPES WILL BE ALLOWED.
5. DEBRIS GUARD SHALL BE REMOVABLE.

TRASH GUARDS FOR CONC. END SECTIONS
(NO SCALE)

EMERGENCY SPILLWAY DETAIL
(NO SCALE)

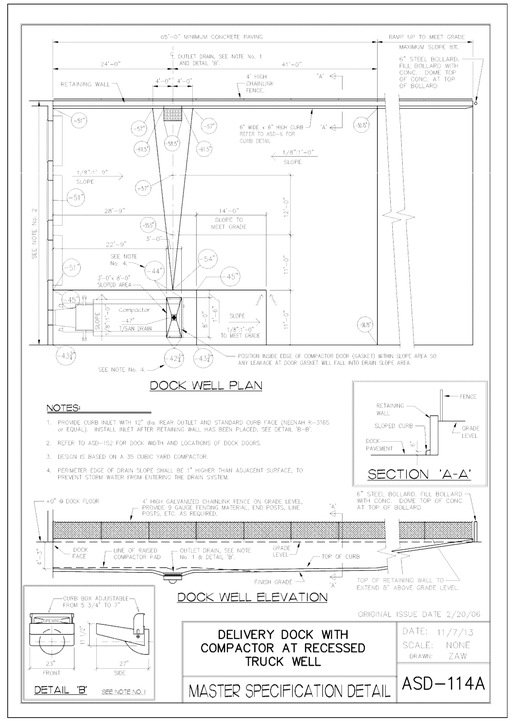

DOCK WELL PLAN

NOTES:

1. PROVIDE CURB INLET WITH 12" dia. REAR OUTLET AND STANDARD CURB FACE (NEENAH R-3165 or EQUAL). INSTALL INLET AFTER RETAINING WALL HAS BEEN PLACED. SEE DETAIL 'B-B'.
2. REFER TO ASD-152 FOR DOCK WIDTH AND LOCATIONS OF DOCK DOORS.
3. DESIGN IS BASED ON A 35 CUBIC YARD COMPACTOR.
4. PERIMETER EDGE OF DRAIN SLOPE SHALL BE 1" HIGHER THAN ADJACENT SURFACE, TO PREVENT STORM WATER FROM ENTERING THE DRAIN SYSTEM.

SECTION 'A-A'

DOCK WELL ELEVATION

DETAIL 'B' (SEE NOTE NO.)

ORIGINAL ISSUE DATE 2/20/06

DELIVERY DOCK WITH COMPACTOR AT RECESSED TRUCK WELL	DATE: 11/7/13 SCALE: NONE DRAWN: ZAW
MASTER SPECIFICATION DETAIL	ASD-114A

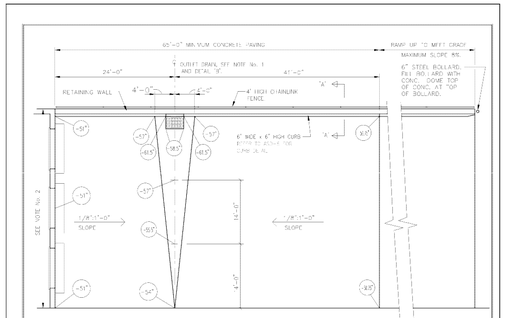

DOCK WELL PLAN

NOTES:

1. PROVIDE CURB INLET WITH 12" dia. REAR OUTLET AND STANDARD CURB FACE (NEENAH R-3165 or EQUAL). INSTALL INLET AFTER RETAINING WALL HAS BEEN PLACED. SEE DETAIL 'B-B'.
2. REFER TO ASD-152 FOR DOCK WIDTH AND LOCATIONS OF DOCK DOORS.

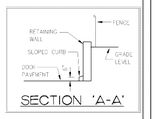

SECTION 'A-A'

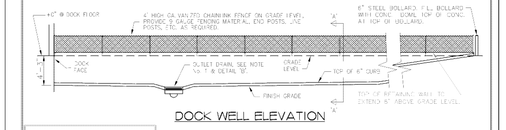

DOCK WELL ELEVATION

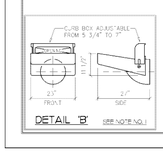

DETAIL 'B' (SEE NOTE NO.)

ORIGINAL ISSUE DATE 8/1/07

DELIVERY DOCK WITHOUT COMPACTOR AT RECESSED TRUCK WELL	DATE: 11/7/13 SCALE: NONE DRAWN: ZAW
MASTER SPECIFICATION DETAIL	ASD-114A.1

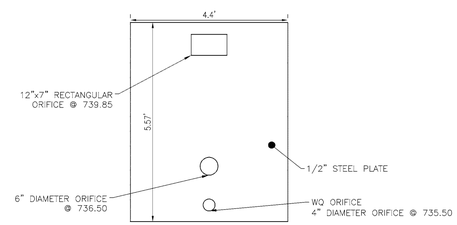

PLATE DETAIL

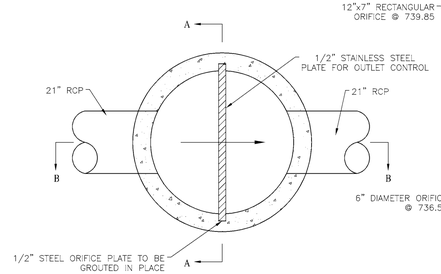

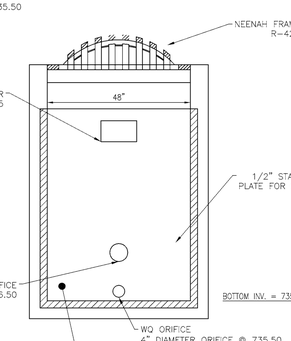

SECTION A-A

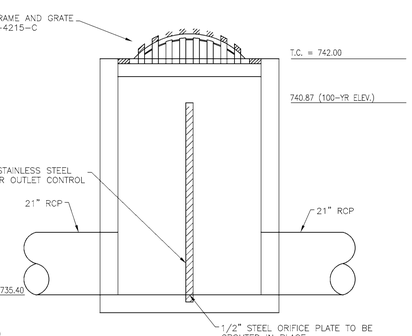

SECTION B-B

RESTRICTOR PLATE INSTALLATION DETAIL
OUTLET SPECIAL STRUCTURE POND "1"

WEIHE ENGINEERS
Land Surveying | Civil Engineering
Landscape Architecture
10505 N. College Avenue
Indianapolis, Indiana 46280
weihe.net
317 846 - 6611
800 452 - 6408
317 843 - 0546 fax
ALLAN H. WEIHE, P.E., L.S. - FOUNDER

PROJECT NO.	W14.0460
DWG NAME:	w140460-C600-details.dwg
DESIGNED BY:	RJWRAM
DRAWN BY:	RJWRAM
CHECKED BY:	JKS
DATE:	02.12.2015

REVISIONS AND ISSUES	BY	DATE
SUBMITTED FOR INITIAL REVIEW	BJS	02.12.2015

JAMES K. SHINNEMAN REGISTERED NO. 10200392 STATE OF INDIANA PROFESSIONAL ENGINEER
APPROVED FOR CONSTRUCTION
NOT APPROVED FOR CONSTRUCTION

JAMES K. SHINNEMAN P.E. 10200392

PREPARED FOR:

KROGER STORE J-979

KROGER MARKETPLACE - MALLORY PARKWAY AND U.S. 31

DRAINAGE DETAILS

Part of the NE/4 of Section 15, Township 12 North, Range 4 East, Franklin Township, Johnson County, Indiana

SHEET NO.

C6.10

PROJECT NO.

W14.0460

LOCATION: H:\2014\W140460\Engineering\Design\Consat\w140460-C600-details.dwg
LAYOUT: ASD-114A
DATE/TIME: February 12, 2015 - 7:34am
PLOTTED BY: schaeffe