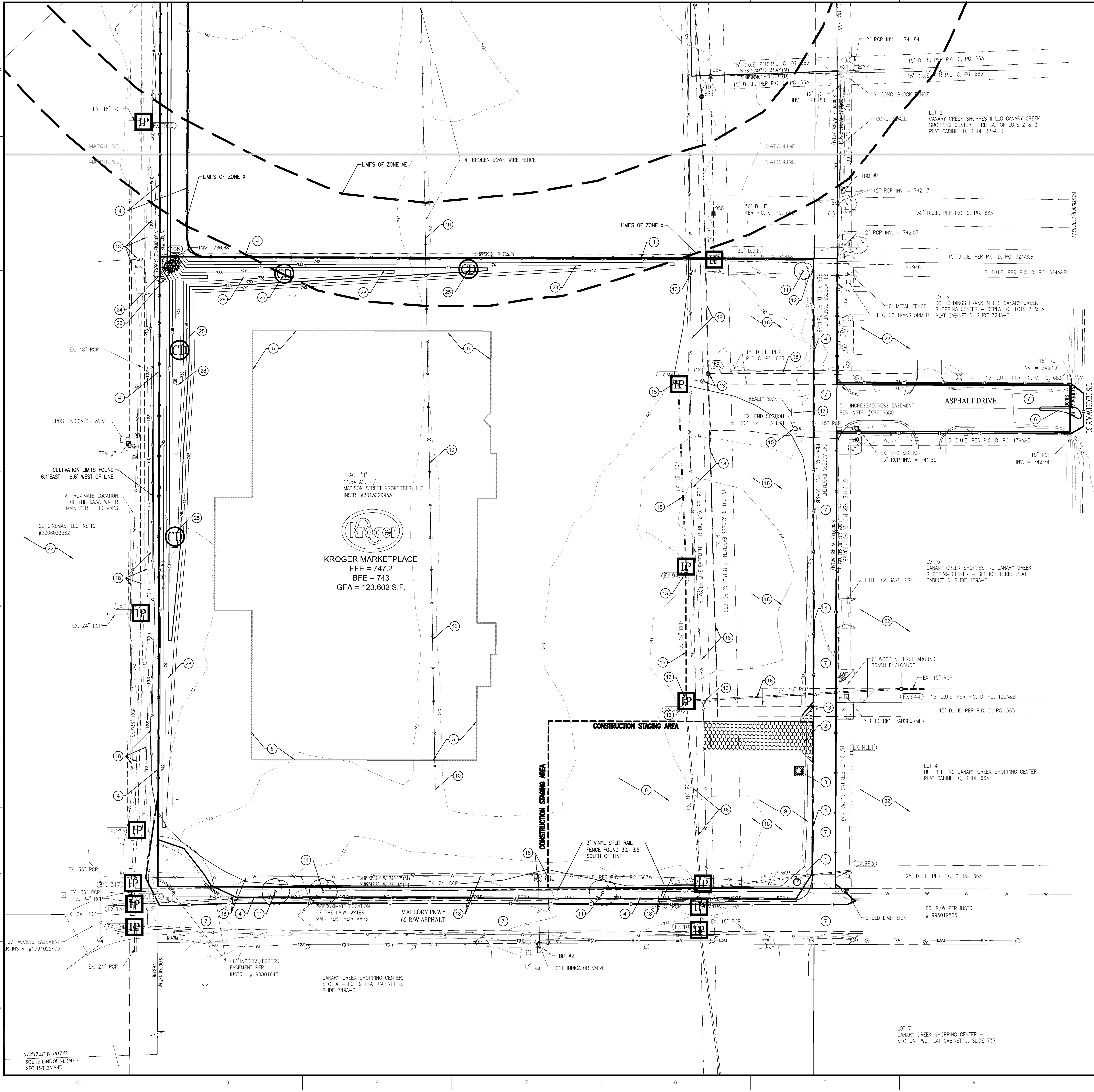

SITE PREPARATION / SWPPP PHASE I NOTES

1. INSTALL PERMIT POSTING AREA. 4" PVC TUBE WITH END CAPS ATTACHED TO PROJECT CONSTRUCTION SIGN TO CONTAIN APPROVED CONSTRUCTION DRAWINGS AND PERMITS FOR INSPECTORS.
2. INSTALL CONSTRUCTION ENTRANCE. REFER TO DETAIL ON SHEET C1.08
3. INSTALL CONCRETE WASHOUT. REFER TO DETAIL ON SHEET C1.08
4. INSTALL SILT FENCE. REFER TO DETAIL ON SHEET C1.08
5. LIMITS OF PROPOSED BUILDING
6. SAWCUT AND REMOVE EXISTING CONCRETE ISLAND.
7. EXISTING ASPHALT DRIVES TO BE KEPT CLEAN AT ALL TIMES
8. CONSTRUCTION STAGING AREA
9. CONSTRUCTION DUMPSTER, FUELING AREA, FUEL TANK AND PORT-O-LET TO BE LOCATED AND NOTED ONSITE BY CONTRACTOR
10. REMOVE EXISTING FENCE LINE WHERE SHOWN
11. REMOVE EXISTING TREES
12. EXISTING FIRE HYDRANT FIRE HYDRANT TO BE REMOVED AND RELOCATED. REFER TO SHEET C8.01 FOR NEW LOCATION.
13. FRAME AND GRATE TO BE ADJUSTED TO THE PROPOSED PAVEMENT GRADES
14. SAWCUT AND REMOVE PAVEMENT AND CURBS FOR PIPE REMOVAL. PROVIDE TEMPORARY ACCESS OVER TRENCH UNTIL FINAL PAVING IS COMPLETE
15. REMOVE STORM SEWER PIPE, END SECTION AND STRUCTURE WHERE SHOWN
16. GROUT NORTH PIPE PENETRATION CLOSED ONCE THE STORM SEWER PIPE HAS BEEN REMOVED
17. REMOVE SIGN
18. UTILITIES EXIST WITHIN THE LIMITS OF DISTURBANCE. UTILITIES SHOWN WERE LOCATED BY THE UTILITY COMPANY AND A PRIVATE LOCATE SERVICE. ADDITIONAL UTILITIES MAY EXIST WITHIN THIS CORRIDOR THAT COULD NOT BE TRACED AND LOCATED. PROCEED WITH CAUTION.
19. REMOVE EXISTING BOARD FENCE. PLACE BACK WITH LIKE MATERIAL AND SIZE
20. REMOVE EXISTING WHITE VINYL FENCE. PLACE BACK WITH LIKE MATERIAL AND SIZE
21. REMOVE PEAR TREES FOR INSTALLATION OF THE NEW STORM SEWER OUTFALL. REPLACE WITH SPECIES AS LISTED ON SHEET L1.02
22. CONTRACTOR TO NOTIFY THE ADJOINER(S) AND CITY ENGINEER 1 WEEK PRIOR TO COMMENCING WITH WORK IN CLOSE PROXIMITY OF THE EXISTING BUILDINGS.
23. INSTALL OUTFALL PIPE, TEMPORARY SEDIMENT BASIN, AND STORM SEWER EXTENSION
24. RIPRAP PAD
25. ROCK CHECK DAM
26. ROCK HORSESHOE CHECK DAM
27. COIR LOG
28. DIVERSION SWALE
29. TEMPORARY SEDIMENT BASIN
30. PROVIDE THE PROPOSED CONTROL STRUCTURE AND ASSOCIATED PIPING FOR THE OUTFALL.
31. PROVIDE A POND SKIMMER AS AN ALTERNATE TO RIPRAP PROTECTION

GENERAL NOTES

1. IT SHALL BE THE RESPONSIBILITY OF THE CONTRACTOR TO VERIFY WITH THE OWNER DURING BIDDING AND DURING CONSTRUCTION ACTIVITIES ALL ITEMS TO BE REMOVED. IT IS THE RESPONSIBILITY OF THE CONTRACTOR TO REMOVE ANY MATERIALS AND/OR STRUCTURES NOT LOCATED ON THIS SURVEY FOR THE INSTALLATION OF THE NEW WORK.
2. IT SHALL BE THE RESPONSIBILITY OF THE CONTRACTOR TO VERIFY ALL EXISTING UTILITIES PERTAINING TO THEIR PHASE OF WORK, AND TO VERIFY WHICH UTILITIES WILL BE REMOVED BY UTILITY COMPANY. ANY AND ALL UTILITIES NOT REMOVED BY THE UTILITY COMPANY SHALL BE REMOVED BY THE CONTRACTOR.
3. UTILITIES ARE SHOWN TO BE APPROXIMATE AND SHALL BE RELOCATED AND/OR CAPPED AND ABANDONED BEFORE CONSTRUCTION AT NO ADDITIONAL COST TO THE OWNER.
4. ALL DEMOLITION MATERIAL AND SALVAGEABLE MATERIAL IS THE PROPERTY OF THE DEMOLITION CONTRACTOR AND SHALL BE PROPERLY DISPOSED OF OFF THE SITE.
5. SLABS ON GRADE MUST BE REMOVED COMPLETELY AND TAKEN OFF THE SITE.
6. ALL UTILITIES MUST REMAIN ACTIVE FOR AREA TENANTS THAT ARE REMAINING. NO UTILITY SERVICE SHALL BE INTERRUPTED DURING THE CONSTRUCTION PROCESS.
7. BEARINGS, DIMENSIONS, AND EASEMENTS ARE SHOWN FOR REFERENCE ONLY. SEE RECORD SURVEYS AND PLATS FOR EXACT INFORMATION.
8. IF THERE ARE ANY QUESTIONS CONCERNING THIS DEMOLITION PLAN, PLEASE CONTACT THE ENGINEER BEFORE CONTINUING WORK.

   WEIHE ENGINEERS, INC.
   10505 NORTH COLLEGE AVENUE
   INDIANAPOLIS, INDIANA 42680
   (317) 846-6611 OR
   TOLL FREE 1-800-452-6408

CONTACT PERSON FOR EROSION CONTROL & SEDIMENT PRACTICES

WEIHE ENGINEERS, INC.
10505 N. COLLEGE AVE.
INDIANAPOLIS, IN 46268
TELEPHONE: (317) 846-6611
FAX: (317) 843-0546
EMAIL: SHINNEMANJ@WEIHE.NET
CONTACT PERSON: JAMIE SHINNEMAN

PLAN CERTIFICATE NOTE:

ORIGINAL ALTA, TOPOGRAPHY, UTILITIES, STORM SEWERS, AND ALL OTHER EXISTING CONDITIONS ITEMS WERE PREPARED BY BANNING ENGINEERING.

FINAL DRAWINGS FOR THE KROGER SITE WERE PREPARED BY WEIHE ENGINEERS, INC. AND JAMES K. SHINNEMAN. FINAL CONSTRUCTION PLANS ARE THOSE PLANS CONTAINING A FINAL REVISION DATE AFTER 02/12/2015. WEIHE ENGINEERS, INC. AND JAMES K. SHINNEMAN ACCEPT RESPONSIBILITY ONLY FOR THE KROGER SITE IMPROVEMENTS RELATED TO THE ENGINEERING WORK SHOWN ON THESE PLANS.

SWPPP 1 LEGEND

- IP - INLET PROTECTION - USE SUBSURFACE INLET PROTECTION WITH OVERFLOW CAPABILITY (DANDY SAC)
- CONSTRUCTION ENTRANCE
- STAGING AREA
- POSTING AREA - 4" PVC TUBE WITH END CAPS ATTACHED TO PROJECT CONSTRUCTION SIGN TO CONTAIN APPROVED CONSTRUCTION DRAWINGS AND PERMITS FOR INSPECTORS.
- SD - INSTALL COIR LOGS AS SHOWN. CONTRACTOR TO ADD ADDITIONAL MEASURES AS CONSTRUCTION PHASING AND SITE CONDITIONS DICTATE
- CONCRETE WASHOUT
- STOCKPILE AREA (TEMPORARY SEEDING REQUIRED)
- SF - SILT FENCE
- TREE PROTECTION
- CD - ROCK CHECK DAM
- D - LIMITS OF DISTURBANCE

LEGEND

FH	=	EXIST. FIRE HYDRANT
WM	=	EXIST. WATER METER/VALVE
	=	EXIST. SIGN
	=	EXIST. MONITOR WELL
PKF	=	EXIST. IRON PIN & OR PK (SET/FOUND)
GM	=	EXIST. GAS METER
	=	EXIST. GAS VALVE
	=	EXIST. STORM INLET
MH	=	EXIST. STORM/SAN./TELE. MANHOLE
EM	=	EXIST. ELECTRIC METER
	=	EXIST. POWER POLE/POWER POLE w/ LIGHT
GA	=	EXIST. GUY ANCHOR
T.Ped.	=	EXIST. TELEPHONE PEDESTAL
AC	=	HVAC UNIT
CO	=	CLEANOUT
MB	=	MAILBOX
	=	LIGHT POLE
BOL	=	EXIST. BOLLARD
	=	EXIST. SANITARY SEWER LINE
	=	EXIST. STORM SEWER LINE
892	=	EXIST. CONTOURS
	=	CONCRETE END SECTION (C.E.S.)
GP	=	GATE POST
	=	TRANSFORMER
	=	RIGHT-OF-WAY LINE
	=	DRAINAGE FLOW ARROW
	=	EXISTING TREE LINE
F.F.E.	=	FINISH FLOOR ELEVATION
TC	=	TOP OF (MANHOLE / INLET) CASTING
INV	=	INVERT ELEVATION
RCP	=	REINFORCED CONCRETE PIPE
CMP	=	CORRUGATED METAL PIPE
PVC	=	POLYVINYL CHLORIDE PIPE
HDPE	=	HIGH DENSITY POLYETHYLENE
	=	FLOW LINE
STR.	=	STRUCTURE
TOW OR TW	=	TOP OF WALL
SSD	=	SUB-SURFACE DRAINAGE
TOC	=	TOP OF CURB
GUT	=	GUTTER
W	=	WATER LINE
G	=	GAS LINE
OHU	=	OVERHEAD UTILITY LINE
T	=	TELEPHONE LINE
E	=	ELECTRIC LINE
TBM	=	TEMPORARY BENCHMARK
XX	=	PARKING COUNT

EXISTING AREAS

TOTAL SITE	=	15.00	AC.
DISTURBED	=	15.00	AC.
PERVIOUS	=	14.25	AC.
IMPERVIOUS	=	0.75	AC.

EROSION CONTROL NOTES

1. ALL DISTURBED AREAS SHALL BE SODDED OR SEEDED, EXCEPT BUILDING PAD AND LANDSCAPE BEDS. SEE LANDSCAPE PLANS FOR LOCATION OF LANDSCAPE BEDS.
2. INSTALL SILT FENCE ALONG ALL DOWNSTREAM SLOPES. SILT FENCE TO FOLLOW CONTOUR.
3. THERE SHALL BE NO DIRT, DEBRIS OR STORAGE OF MATERIAL IN THE STREET.
4. CONTRACTOR TO COORDINATE THE SWPPP PROGRAM WITH SPECIFICATION SECTION 312500.
5. ANY EXISTING TREE(S) THAT MAY REQUIRE REMOVAL BUT ARE NOT SHOWN ON THE PLAN AS BEING REMOVED MAY BE DONE SO, AS LONG AS THE TREE(S) ARE RELOCATED TO AN APPROVED ALTERNATIVE LOCATION ON SITE.

811
Know what's below.
Call before you dig.
Within Indiana Call
811 or 800-382-5544
24 Hours a Day, 7 Days a Week.
PER INDIANA STATE LAW IC 8-1-26. IT IS AGAINST THE LAW TO EXCAVATE WITHOUT NOTIFYING THE UNDERGROUND LOCATION SERVICE TWO (2) WORKING DAYS BEFORE COMMENCING WORK.

SCALE: 1" = 50
0 25 50 100

10505 N. College Avenue
Indianapolis, Indiana 46280
weihe.net
317 | 846 - 6611
800 | 452 - 6408
317 | 843 - 0546 fax
ALLAN H. WEIHE, P.E., L.S. - FOUNDER
WEIHE ENGINEERS
Land Surveying | Civil Engineering
Landscape Architecture

REVISIONS AND ISSUES	DATE	BY
SUBMITTED FOR INITIAL REVIEW	02.12.2015	BJS

PROJECT NO.: W14.0460
DWG NAME: w140460-C100 swppp1.dwg
DESIGNED BY: RLW/RAM
DRAWN BY: RLW/RAM
CHECKED BY: JKS
DATE: 02.12.2015

JAMES K. SHINNEMAN REGISTERED No. 10200392 STATE OF INDIANA PROFESSIONAL ENGINEER
APPROVAL PENDING NOT FOR CONSTRUCTION
JAMES K. SHINNEMAN P.E. 10200392

PREPARED FOR:
KROGER STORE J-979
KROGER MARKETPLACE - MALLORY PARKWAY AND U.S. 31
SITE PREPARATION AND SWPPP 1
Part of the NE/4 of Section 15, Township 12 North, Range 4 East, Franklin Township, Johnson County, Indiana

SHEET NO. C1.01
PROJECT NO. W14.0460

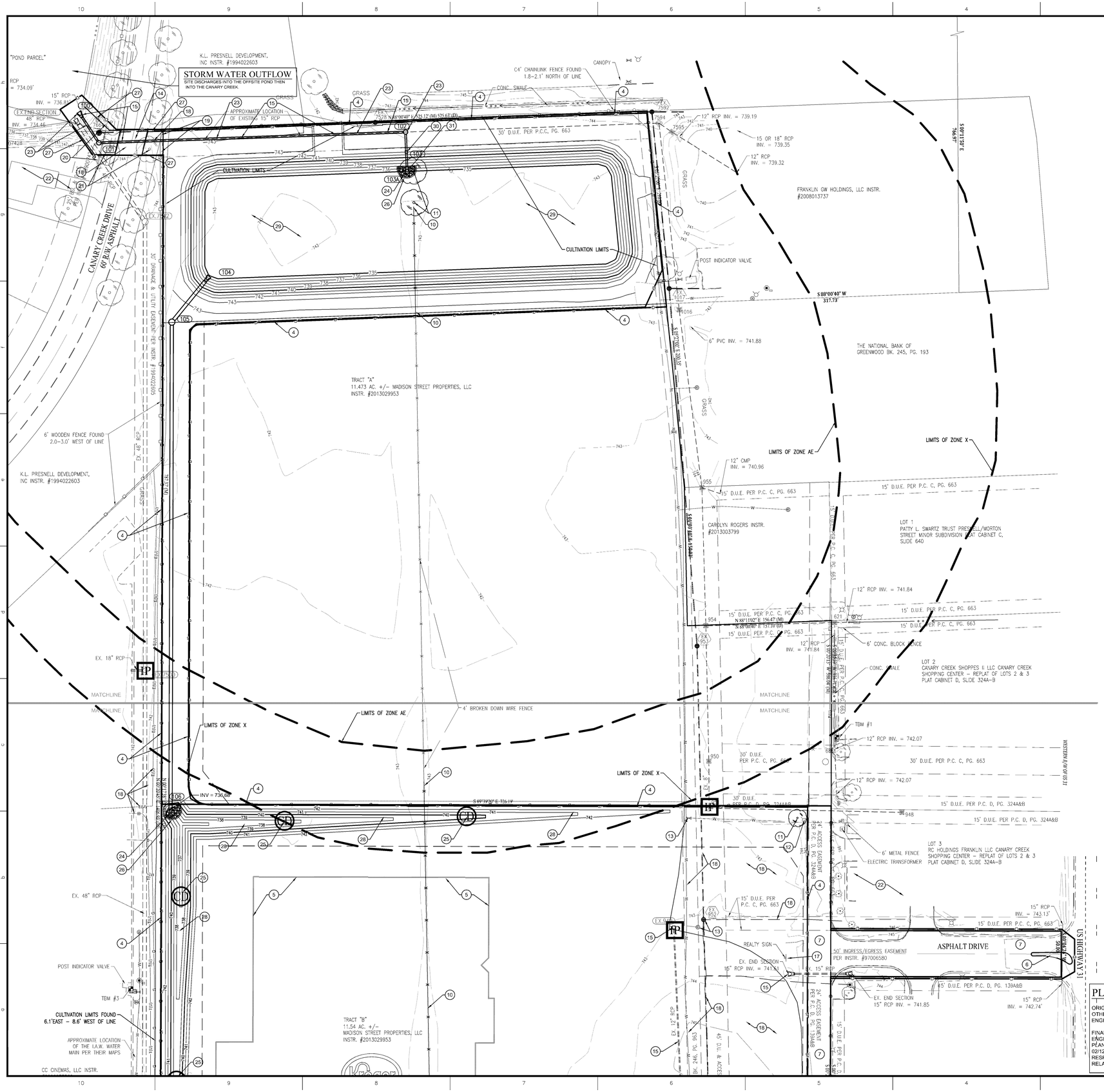

SITE PREPARATION / SWPPP PHASE I NOTES

1. INSTALL PERMIT POSTING AREA. 4" PVC TUBE WITH END CAPS ATTACHED TO PROJECT CONSTRUCTION SIGN TO CONTAIN APPROVED CONSTRUCTION DRAWINGS AND PERMITS FOR INSPECTORS.
2. INSTALL CONSTRUCTION ENTRANCE. REFER TO DETAIL ON SHEET C1.08
3. INSTALL CONCRETE WASHOUT. REFER TO DETAIL ON SHEET C1.08
4. INSTALL SILT FENCE. REFER TO DETAIL ON SHEET C1.08
5. LIMITS OF PROPOSED BUILDING
6. SAWCUT AND REMOVE EXISTING CONCRETE ISLAND.
7. EXISTING ASPHALT DRIVES TO BE KEPT CLEAN AT ALL TIMES
8. CONSTRUCTION STAGING AREA
9. CONSTRUCTION DUMPSTER, FUELING AREA, FUEL TANK AND PORT-O-LET TO BE LOCATED AND NOTED ONSITE BY CONTRACTOR
10. REMOVE EXISTING FENCE LINE WHERE SHOWN
11. REMOVE EXISTING TREES
12. EXISTING FIRE HYDRANT FIRE HYDRANT TO BE REMOVED AND RELOCATED. REFER TO SHEET C6.01 FOR NEW LOCATION.
13. FRAME AND GRATE TO BE ADJUSTED TO THE PROPOSED PAVEMENT GRADES
14. SAWCUT AND REMOVE PAVEMENT AND CURBS FOR PIPE REMOVAL. PROVIDE TEMPORARY ACCESS OVER TRENCH UNTIL FINAL PAVING IS COMPLETE
15. REMOVE STORM SEWER PIPE, END SECTION AND STRUCTURE WHERE SHOWN
16. GROUT NORTH PIPE PENETRATION CLOSED ONCE THE STORM SEWER PIPE HAS BEEN REMOVED
17. REMOVE SIGN
18. UTILITIES EXIST WITHIN THE LIMITS OF DISTURBANCE. UTILITIES SHOWN WERE LOCATED BY THE UTILITY COMPANY AND A PRIVATE LOCATE SERVICE. ADDITIONAL UTILITIES MAY EXIST WITHIN THIS CORRIDOR THAT COULD NOT BE TRACED AND LOCATED. PROCEED WITH CAUTION.
19. REMOVE EXISTING BOARD FENCE. PLACE BACK WITH LIKE MATERIAL AND SIZE
20. REMOVE EXISTING WHITE VINYL FENCE. PLACE BACK WITH LIKE MATERIAL AND SIZE
21. REMOVE PEAR TREES FOR INSTALLATION OF THE NEW STORM SEWER OUTFALL. REPLACE WITH SPECIES AS LISTED ON SHEET L1.02
22. CONTRACTOR TO NOTIFY THE ADJOINER(S) AND CITY ENGINEER 1 WEEK PRIOR TO COMMENCING WITH WORK IN CLOSE PROXIMITY OF THE EXISTING BUILDINGS.
23. INSTALL OUTFALL PIPE, TEMPORARY SEDIMENT BASIN, AND STORM SEWER EXTENSION
24. RIPRAP PAD
25. ROCK CHECK DAM
26. ROCK HORSESHOE CHECK DAM
27. COIR LOG
28. DIVERSION SWALE
29. TEMPORARY SEDIMENT BASIN
30. PROVIDE THE PROPOSED CONTROL STRUCTURE AND ASSOCIATED PIPING FOR THE OUTFALL.
31. PROVIDE A POND SKIMMER AS AN ALTERNATE TO RIPRAP PROTECTION

IP - INLET PROTECTION - USE SUBSURFACE INLET PROTECTION WITH OVERFLOW CAPABILITY (DANDY SAC)
- CONSTRUCTION ENTRANCE
- STAGING AREA
- POSTING AREA - 4" PVC TUBE WITH END CAPS ATTACHED TO PROJECT CONSTRUCTION SIGN TO CONTAIN APPROVED CONSTRUCTION DRAWINGS AND PERMITS FOR INSPECTORS.
- INSTALL COIR LOGS AS SHOWN. CONTRACTOR TO ADD ADDITIONAL MEASURES AS CONSTRUCTION PHASING AND SITE CONDITIONS DICTATE
- CONCRETE WASHOUT
- STOCKPILE AREA (TEMPORARY SEEDING REQUIRED)
- SILT FENCE
- TREE PROTECTION
CD - ROCK CHECK DAM
- LIMITS OF DISTURBANCE

LEGEND

FH	=	EXIST. FIRE HYDRANT
WM	=	EXIST. WATER METER/VALVE
	=	EXIST. SIGN
	=	EXIST. MONITOR WELL
PKF	=	EXIST. IRON PIN & OR PK (SET/FOUND)
GM	=	EXIST. GAS METER
	=	EXIST. GAS VALVE
	=	EXIST. STORM INLET
	=	EXIST. STORM/SAN./TELE MANHOLE
EM	=	EXIST. ELECTRIC METER
	=	EXIST. POWER POLE/POWER POLE w/ LIGHT
GA	=	EXIST. GUY ANCHOR
T.Ped.	=	EXIST. TELEPHONE PEDESTAL
AC	=	HVAC UNIT
CO	=	CLEANOUT
MB	=	MAILBOX
	=	LIGHT POLE
BOL	=	EXIST. BOLLARD
	=	EXIST. SANITARY SEWER LINE
	=	EXIST. STORM SEWER LINE
892	=	EXIST. CONTOURS
	=	CONCRETE END SECTION (C.E.S.)
GP	=	GATE POST
	=	TRANSFORMER
	=	RIGHT-OF-WAY LINE
	=	DRAINAGE FLOW ARROW
	=	EXISTING TREE LINE
F.F.E.	=	FINISH FLOOR ELEVATION
TC	=	TOP OF (MANHOLE / INLET) CASTING
INV	=	INVERT ELEVATION
RCP	=	REINFORCED CONCRETE PIPE
CMP	=	CORRUGATED METAL PIPE
PVC	=	POLYVINYL CHLORIDE PIPE
HDPE	=	HIGH DENSITY POLYETHYLENE
	=	FLOW LINE
STR.	=	STRUCTURE
TOW OR TW	=	TOP OF WALL
SSD	=	SUB-SURFACE DRAINAGE
TOC	=	TOP OF CURB
GUT	=	GUTTER
W	=	WATER LINE
G	=	GAS LINE
OHU	=	OVERHEAD UTILITY LINE
T	=	TELEPHONE LINE
E	=	ELECTRIC LINE
TBM	=	TEMPORARY BENCHMARK
	=	PARKING COUNT

GENERAL NOTES

1. IT SHALL BE THE RESPONSIBILITY OF THE CONTRACTOR TO VERIFY WITH THE OWNER DURING BIDDING AND DURING CONSTRUCTION ACTIVITIES ALL ITEMS TO BE REMOVED. IT IS THE RESPONSIBILITY OF THE CONTRACTOR TO REMOVE ANY MATERIALS AND/OR STRUCTURES NOT LOCATED ON THIS SURVEY FOR THE INSTALLATION OF THE NEW WORK.
2. IT SHALL BE THE RESPONSIBILITY OF THE CONTRACTOR TO VERIFY ALL EXISTING UTILITIES PERTAINING TO THEIR PHASE OF WORK, AND TO VERIFY WHICH UTILITIES WILL BE REMOVED BY UTILITY COMPANY. ANY AND ALL UTILITIES NOT REMOVED BY THE UTILITY COMPANY SHALL BE REMOVED BY THE CONTRACTOR.
3. UTILITIES ARE SHOWN TO BE APPROXIMATE AND SHALL BE RELOCATED AND/OR CAPPED AND ABANDONED BEFORE CONSTRUCTION AT NO ADDITIONAL COST TO THE OWNER.
4. ALL DEMOLITION MATERIAL AND SALVAGEABLE MATERIAL IS THE PROPERTY OF THE DEMOLITION CONTRACTOR AND SHALL BE PROPERLY DISPOSED OF OFF THE SITE.
5. SLABS ON GRADE MUST BE REMOVED COMPLETELY AND TAKEN OFF THE SITE.
6. ALL UTILITIES MUST REMAIN ACTIVE FOR AREA TENANTS THAT ARE REMAINING. NO UTILITY SERVICE SHALL BE INTERRUPTED DURING THE CONSTRUCTION PROCESS.
7. BEARINGS, DIMENSIONS, AND EASEMENTS ARE SHOWN FOR REFERENCE ONLY. SEE RECORD SURVEYS AND PLATS FOR EXACT INFORMATION.
8. IF THERE ARE ANY QUESTIONS CONCERNING THIS DEMOLITION PLAN, PLEASE CONTACT THE ENGINEER BEFORE CONTINUING WORK.

WEIHE ENGINEERS, INC.
10505 NORTH COLLEGE AVENUE
INDIANAPOLIS, INDIANA 42680
(317) 846-6611 OR
TOLL FREE 1-800-452-6408

EXISTING AREAS

TOTAL SITE	=	15.00	AC.
DISTURBED	=	15.00	AC.
PERVIOUS	=	14.25	AC.
IMPERVIOUS	=	0.75	AC.

EROSION CONTROL NOTES

1. ALL DISTURBED AREAS SHALL BE SODDED OR SEEDED, EXCEPT BUILDING PAD AND LANDSCAPE BEDS. SEE LANDSCAPE PLANS FOR LOCATION OF LANDSCAPE BEDS.
2. INSTALL SILT FENCE ALONG ALL DOWNSTREAM SLOPES. SILT FENCE TO FOLLOW CONTOUR.
3. THERE SHALL BE NO DIRT, DEBRIS OR STORAGE OF MATERIAL IN THE STREET.
4. CONTRACTOR TO COORDINATE THE SWPPP PROGRAM WITH SPECIFICATION SECTION 312500.
5. ANY EXISTING TREE(S) THAT MAY REQUIRE REMOVAL BUT ARE NOT SHOWN ON THE PLAN AS BEING REMOVED MAY BE DONE SO, AS LONG AS THE TREE(S) ARE RELOCATED TO AN APPROVED ALTERNATIVE LOCATION ON SITE.

CONTACT PERSON FOR EROSION CONTROL & SEDIMENT PRACTICES

WEIHE ENGINEERS, INC.
10505 N. COLLEGE AVE.
INDIANAPOLIS, IN 46268
TELEPHONE: (317) 846-6611
FAX: (317) 843-0546
EMAIL: SHINNEMANJ@WEIHE.NET
CONTACT PERSON: JAMIE SHINNEMAN

PLAN CERTIFICATE NOTE:

ORIGINAL ALTA, TOPOGRAPHY, UTILITIES, STORM SEWERS, AND ALL OTHER EXISTING CONDITIONS ITEMS WERE PREPARED BY BANNING ENGINEERING.

FINAL DRAWINGS FOR THE KROGER SITE WERE PREPARED BY WEIHE ENGINEERS, INC. AND JAMES K. SHINNEMAN. FINAL CONSTRUCTION PLANS ARE THOSE PLANS CONTAINING A FINAL REVISION DATE AFTER 02/12/2015. WEIHE ENGINEERS, INC. AND JAMES K. SHINNEMAN ACCEPT RESPONSIBILITY ONLY FOR THE KROGER SITE IMPROVEMENTS RELATED TO THE ENGINEERING WORK SHOWN ON THESE PLANS.

SCALE: 1" = 50
0 25 50 100

811 Know what's below. Call before you dig.
Within Indiana Call 811 or 800-382-5544
24 Hours a Day, 7 Days a Week.
PER INDIANA STATE LAW IC 8-1-26, IT IS AGAINST THE LAW TO EXCAVATE WITHOUT NOTIFYING THE UNDERGROUND LOCATION SERVICE TWO (2) WORKING DAYS BEFORE COMMENCING WORK.

10505 N. College Avenue
Indianapolis, Indiana 46280
weihe.net
317 846 - 6611
800 452 - 6408
317 843 - 0546 fax
ALLAN H. WEIHE, P.E., L.S. - FOUNDER

WEIHE ENGINEERS
Land Surveying | Civil Engineering
Landscape Architecture

		BY
PROJECT NO. W14.0460		
DWG NAME: w14046-C100 swppp1.dwg		
DESIGNED BY: RJ/WF/AM		
DRAWN BY: RJ/WF/AM		
CHECKED BY: JKS		
DATE: 02.12.2015		
REVISIONS AND ISSUES: SUBMITTED FOR INITIAL REVIEW	DATE 02.12.2015	BJS

JAMES K. SHINNEMAN
REGISTERED NO. 10200392
STATE OF INDIANA
PROFESSIONAL ENGINEER

JAMES K. SHINNEMAN P.E. 10200392

PREPARED FOR:
KROGER STORE J-979
KROGER MARKETPLACE - MALLORY PARKWAY AND U.S. 31

SITE PREPARATION AND SWPPP 1

Part of the NE¼ of Section 15, Township 12 North, Range 4 East, Franklin Township, Johnson County, Indiana

SHEET NO.
C1.02
PROJECT NO.
W14.0460

LOCATION: H:\2014\W14046\Engineering\design\construct\w14046-C100 swppp1.dwg
LAYOUT: C1.02
DATE/TIME: February 12, 2015 - 7:26am
PLOTTED BY: schoettle

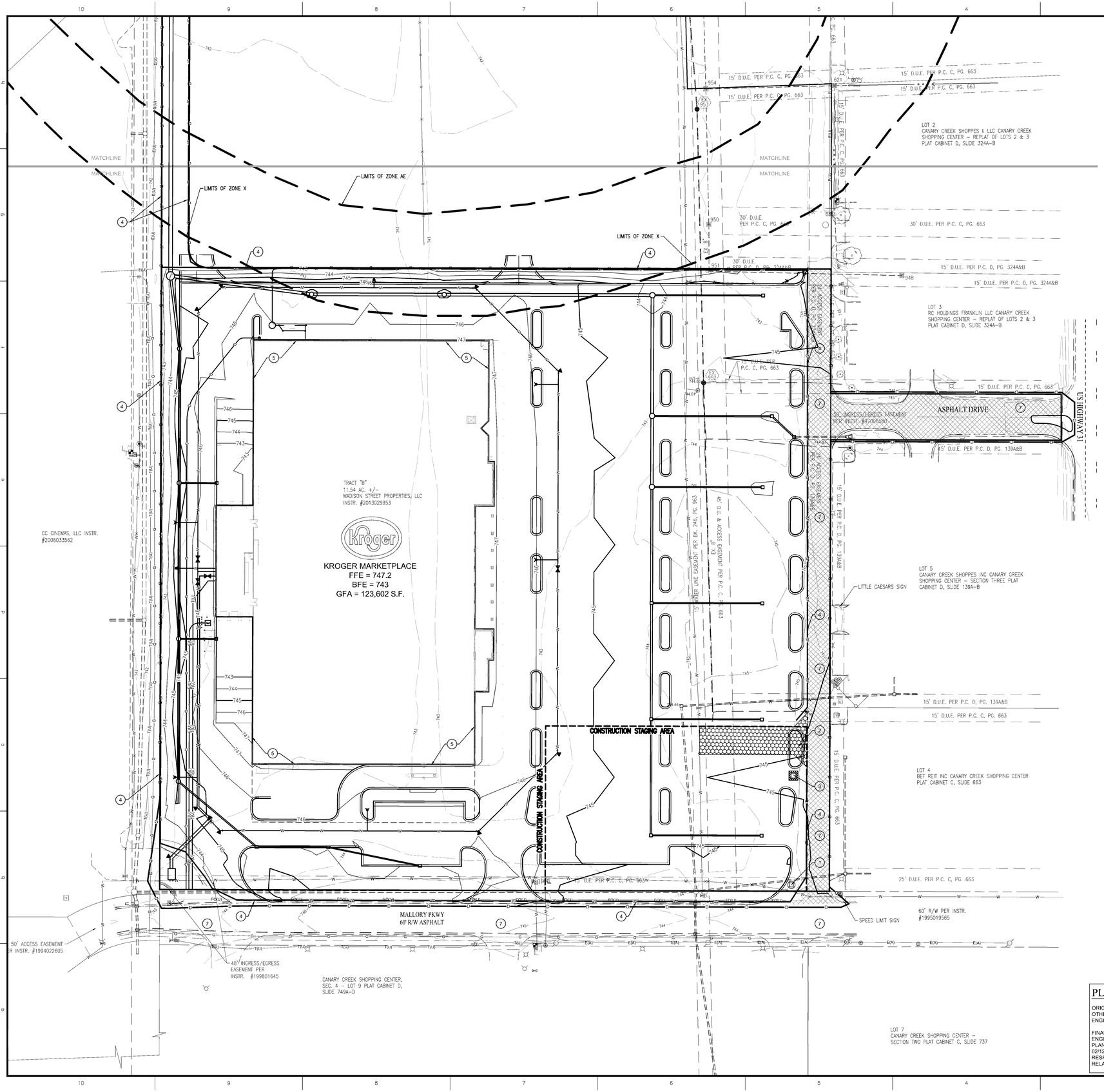

SWPPP PHASE II NOTES

1. INSTALL PERMIT POSTING AREA. 4" PVC TUBE WITH END CAPS ATTACHED TO PROJECT CONSTRUCTION SIGN TO CONTAIN APPROVED CONSTRUCTION DRAWINGS AND PERMITS FOR INSPECTORS.
2. INSTALL CONSTRUCTION ENTRANCE. REFER TO DETAIL ON SHEET C1.08
3. INSTALL CONCRETE WASHOUT. REFER TO DETAIL ON SHEET C1.08
4. INSTALL SILT FENCE. REFER TO DETAIL ON SHEET C1.08
5. LIMITS OF PROPOSED BUILDING
6. COIR LOG
7. MILL AND RESURFACE THE EXISTING DRIVES

SWPPP II LEGEND

- IP - INLET PROTECTION - USE SUBSURFACE INLET PROTECTION WITH OVERFLOW CAPABILITY (DANDY SAC)
- CONSTRUCTION ENTRANCE
- STAGING AREA
- POSTING AREA - 4" PVC TUBE WITH END CAPS ATTACHED TO PROJECT CONSTRUCTION SIGN TO CONTAIN APPROVED CONSTRUCTION DRAWINGS AND PERMITS FOR INSPECTORS.
- INSTALL COIR LOGS AS SHOWN. CONTRACTOR TO ADD ADDITIONAL MEASURES AS CONSTRUCTION PHASING AND SITE CONDITIONS DICTATE
- CONCRETE WASHOUT
- STOCKPILE AREA (TEMPORARY SEEDING REQUIRED)
- SILT FENCE
- TREE PROTECTION
- CD - ROCK CHECK DAM
- LIMITS OF DISTURBANCE

LEGEND

FH	=	EXIST. FIRE HYDRANT
WM	=	EXIST. WATER METER/VALVE
	=	EXIST. SIGN
	=	EXIST. MONITOR WELL
PKF	=	EXIST. IRON PIN & OR PK (SET/FOUND)
GM	=	EXIST. GAS METER
	=	EXIST. GAS VALVE
	=	EXIST. STORM INLET
	=	EXIST. STORM/SAN./TELE. MANHOLE
EM	=	EXIST. ELECTRIC METER
	=	EXIST. POWER POLE/POWER POLE w/ LIGHT
GA	=	EXIST. GUY ANCHOR
T.Ped.	=	EXIST. TELEPHONE PEDESTAL
AC	=	HVAC UNIT
CO	=	CLEANOUT
MB	=	MAILBOX
	=	LIGHT POLE
BOL	=	EXIST. BOLLARD
	=	EXIST. SANITARY SEWER LINE
	=	EXIST. STORM SEWER LINE
990	=	EXIST. CONTOURS
	=	CONCRETE END SECTION (C.E.S.)
GP	=	GATE POST
	=	TRANSFORMER
	=	RIGHT-OF-WAY LINE
	=	DRAINAGE FLOW ARROW
	=	EXISTING TREE LINE
F.F.E.	=	FINISH FLOOR ELEVATION
TC	=	TOP OF (MANHOLE / INLET) CASTING
INV	=	INVERT ELEVATION
RCP	=	REINFORCED CONCRETE PIPE
CMP	=	CORRUGATED METAL PIPE
PVC	=	POLYVINYL CHLORIDE PIPE
HDPE	=	HIGH DENSITY POLYETHYLENE
	=	FLOW LINE
STR.	=	STRUCTURE
TOW OR TW	=	TOP OF WALL
SSQ	=	SUB-SURFACE DRAINAGE
TOC	=	TOP OF CURB
GUT	=	GUTTER
W	=	WATER LINE
G	=	GAS LINE
OHU	=	OVERHEAD UTILITY LINE
T	=	TELEPHONE LINE
E	=	ELECTRIC LINE
TBM	=	TEMPORARY BENCHMARK
	=	PARKING COUNT

GENERAL NOTES

1. IT SHALL BE THE RESPONSIBILITY OF THE CONTRACTOR TO VERIFY WITH THE OWNER DURING BIDDING AND DURING CONSTRUCTION ACTIVITIES ALL ITEMS TO BE REMOVED. IT IS THE RESPONSIBILITY OF THE CONTRACTOR TO REMOVE ANY MATERIALS AND/OR STRUCTURES NOT LOCATED ON THIS SURVEY FOR THE INSTALLATION OF THE NEW WORK.
2. IT SHALL BE THE RESPONSIBILITY OF THE CONTRACTOR TO VERIFY ALL EXISTING UTILITIES PERTAINING TO THEIR PHASE OF WORK, AND TO VERIFY WHICH UTILITIES WILL BE REMOVED BY UTILITY COMPANY. ANY AND ALL UTILITIES NOT REMOVED BY THE UTILITY COMPANY SHALL BE REMOVED BY THE CONTRACTOR.
3. UTILITIES ARE SHOWN TO BE APPROXIMATE AND SHALL BE RELOCATED AND/OR CAPPED AND ABANDONED BEFORE CONSTRUCTION AT NO ADDITIONAL COST TO THE OWNER.
4. ALL DEMOLITION MATERIAL AND SALVAGEABLE MATERIAL IS THE PROPERTY OF THE DEMOLITION CONTRACTOR AND SHALL BE PROPERLY DISPOSED OF OFF THE SITE.
5. SLABS ON GRADE MUST BE REMOVED COMPLETELY AND TAKEN OFF THE SITE.
6. ALL UTILITIES MUST REMAIN ACTIVE FOR AREA TENANTS THAT ARE REMAINING. NO UTILITY SERVICE SHALL BE INTERRUPTED DURING THE CONSTRUCTION PROCESS.
7. BEARINGS, DIMENSIONS, AND EASEMENTS ARE SHOWN FOR REFERENCE ONLY. SEE RECORD SURVEYS AND PLATS FOR EXACT INFORMATION.
8. IF THERE ARE ANY QUESTIONS CONCERNING THIS DEMOLITION PLAN, PLEASE CONTACT THE ENGINEER BEFORE CONTINUING WORK.

WEIHE ENGINEERS, INC.
10505 NORTH COLLEGE AVENUE
INDIANAPOLIS, INDIANA 42680
(317) 846-6611 OR
TOLL FREE 1-800-452-6408

EXISTING AREAS

TOTAL SITE	=	15.00	AC.
DISTURBED	=	15.00	AC.
PERVIOUS	=	14.25	AC.
IMPERVIOUS	=	0.75	AC.

EROSION CONTROL NOTES

1. ALL DISTURBED AREAS SHALL BE SODDED OR SEEDED, EXCEP BUILDING PAD AND LANDSCAPE BEDS. SEE LANDSCAPE PLANS FOR LOCATION OF LANDSCAPE BEDS.
2. INSTALL SILT FENCE ALONG ALL DOWNSTREAM SLOPES. SILT FENCE TO FOLLOW CONTOUR.
3. THERE SHALL BE NO DIRT, DEBRIS OR STORAGE OF MATERIAL IN THE STREET.
4. CONTRACTOR TO COORDINATE THE SWPPP PROGRAM WITH SPECIFICATION SECTION 312500.
5. ANY EXISTING TREE(S) THAT MAY REQUIRE REMOVAL BUT ARE NOT SHOWN ON THE PLAN AS BEING REMOVED MAY BE DONE SO, AS LONG AS THE TREE(S) ARE RELOCATED TO AN APPROVED ALTERNATIVE LOCATION ON SITE.

CONTACT PERSON FOR EROSION CONTROL & SEDIMENT PRACTICES

WEIHE ENGINEERS, INC.
10505 N. COLLEGE AVE.
INDIANAPOLIS, IN 46268
TELEPHONE: (317) 846-6611
FAX: (317) 843-0546
EMAIL: SHINNEMANJ@WEIHE.NET
CONTACT PERSON: JAMIE SHINNEMAN

PLAN CERTIFICATE NOTE:

ORIGINAL ALTA, TOPOGRAPHY, UTILITIES, STORM SEWERS, AND ALL OTHER EXISTING CONDITIONS ITEMS WERE PREPARED BY BANNING ENGINEERING.

FINAL DRAWINGS FOR THE KROGER SITE WERE PREPARED BY WEIHE ENGINEERS, INC. AND JAMES K. SHINNEMAN. FINAL CONSTRUCTION PLANS ARE THOSE PLANS CONTAINING A FINAL REVISION DATE AFTER 02/12/2015. WEIHE ENGINEERS, INC. AND JAMES K. SHINNEMAN ACCEPT RESPONSIBILITY ONLY FOR THE KROGER SITE IMPROVEMENTS RELATED TO THE ENGINEERING WORK SHOWN ON THESE PLANS.

SCALE: 1" = 50

0 25 50 100

811 Know what's below. Call before you dig.
Within Indiana Call 811 or 800-382-5544
24 Hours a Day, 7 Days a Week.
PER INDIANA STATE LAW IC 8-1-26, IT IS AGAINST THE LAW TO EXCAVATE WITHOUT NOTIFYING THE UNDERGROUND LOCATION SERVICE TWO (2) WORKING DAYS BEFORE COMMENCING WORK.

10505 N. College Avenue
Indianapolis, Indiana 46280
weihe.net
317 846 - 6611
800 452 - 6408
317 843 - 0546 fax
ALLAN H. WEIHE, P.E., L.S. - FOUNDER

WEIHE ENGINEERS
Land Surveying | Civil Engineering
Landscape Architecture

PROJECT NO.	W14.0460
DWG NAME:	w140460-C101 swppp2.dwg
DESIGNED BY:	R.L/W/B.S/AM
DRAWN BY:	R.L/W/B.S/AM
CHECKED BY:	JKS
DATE:	02.12.2015

REVISIONS AND ISSUES	BY	DATE
SUBMITTED FOR INITIAL REVIEW	B.S	02.12.2015

JAMES K. SHINNEMAN
REGISTERED
NO. 10200392
STATE OF INDIANA
PROFESSIONAL ENGINEER
NOT VALID UNLESS PRINTED

JAMES K. SHINNEMAN P.E. 10200392

PREPARED FOR:
KROGER STORE J-979

KROGER MARKETPLACE - MALLORY PARKWAY AND U.S. 31

STORMWATER POLLUTION PREVENTION PLAN 2

Part of the NE¼ of Section 15, Township 12 North, Range 4 East, Franklin Township, Johnson County, Indiana

SHEET NO.
C1.03

PROJECT NO.
W14.0460

LOCATION: I:\2014\W140460\Engineering\design\consat\w140460-C101 swppp2.dwg
LAYOUT: C1.03
DATE/TIME: February 12, 2015 - 7:26am
PLOTTED BY: schoefb

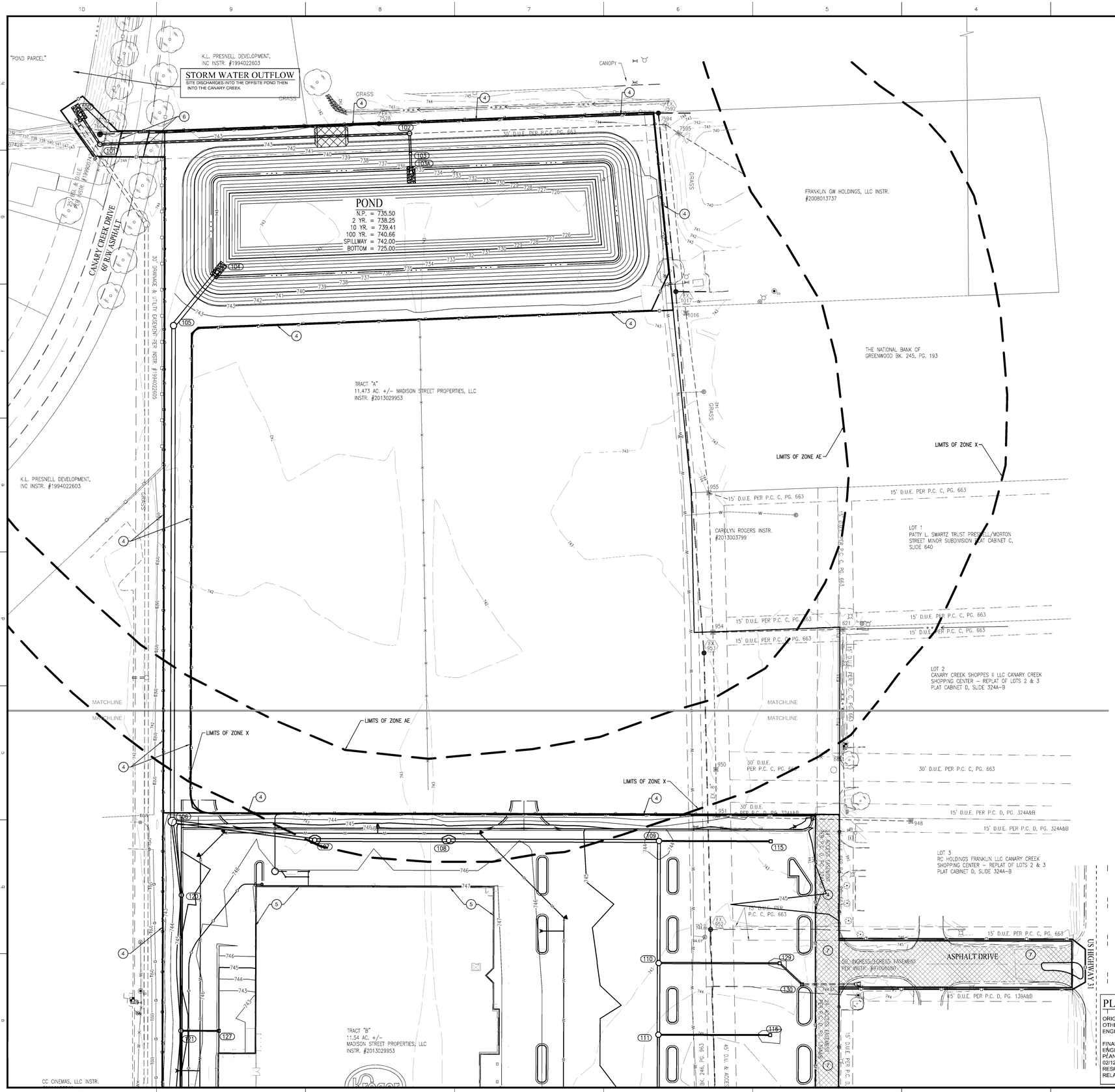

SWPPP PHASE II NOTES

1. INSTALL PERMIT POSTING AREA. 4" PVC TUBE WITH END CAPS ATTACHED TO PROJECT CONSTRUCTION SIGN TO CONTAIN APPROVED CONSTRUCTION DRAWINGS AND PERMITS FOR INSPECTORS.
2. INSTALL CONSTRUCTION ENTRANCE. REFER TO DETAIL ON SHEET C1.08
3. INSTALL CONCRETE WASHOUT. REFER TO DETAIL ON SHEET C1.08
4. INSTALL SILT FENCE. REFER TO DETAIL ON SHEET C1.08
5. LIMITS OF PROPOSED BUILDING
6. COIR LOG
7. MILL AND RESURFACE THE EXISTING DRIVES

SWPPP II LEGEND

- IP - INLET PROTECTION - USE SUBSURFACE INLET PROTECTION WITH OVERFLOW CAPABILITY (DANDY SAC)
- CONSTRUCTION ENTRANCE
- STAGING AREA
- POSTING AREA - 4" PVC TUBE WITH END CAPS ATTACHED TO PROJECT CONSTRUCTION SIGN TO CONTAIN APPROVED CONSTRUCTION DRAWINGS AND PERMITS FOR INSPECTORS.
- INSTALL COIR LOGS AS SHOWN. CONTRACTOR TO ADD ADDITIONAL MEASURES AS CONSTRUCTION PHASING AND SITE CONDITIONS DICTATE
- CONCRETE WASHOUT
- STOCKPILE AREA (TEMPORARY SEEDING REQUIRED)
- SILT FENCE
- TREE PROTECTION
- CD - ROCK CHECK DAM
- LIMITS OF DISTURBANCE

LEGEND

FH	=	EXIST. FIRE HYDRANT
WM	=	EXIST. WATER METER/VALVE
	=	EXIST. SIGN
	=	EXIST. MONITOR WELL
PKF	=	EXIST. IRON PIN & OR PK (SET/FOUND)
GM	=	EXIST. GAS METER
	=	EXIST. GAS VALVE
	=	EXIST. STORM INLET
	=	EXIST. STORM/SAN./TELE. MANHOLE
EM	=	EXIST. ELECTRIC METER
	=	EXIST. POWER POLE/POWER POLE w/ LIGHT
GA	=	EXIST. GUY ANCHOR
T.Ped.	=	EXIST. TELEPHONE PEDESTAL
AC	=	HVAC UNIT
CO	=	CLEANOUT
MB	=	MAILBOX
	=	LIGHT POLE
BOL	=	EXIST. BOLLARD
	=	EXIST. SANITARY SEWER LINE
	=	EXIST. STORM SEWER LINE
990	=	EXIST. CONTOURS
	=	CONCRETE END SECTION (C.E.S.)
GP	=	GATE POST
	=	TRANSFORMER
	=	RIGHT-OF-WAY LINE
	=	DRAINAGE FLOW ARROW
	=	EXISTING TREE LINE
F.F.E.	=	FINISH FLOOR ELEVATION
TC	=	TOP OF (MANHOLE / INLET) CASTING
INV	=	INVERT ELEVATION
RCP	=	REINFORCED CONCRETE PIPE
CMP	=	CORRUGATED METAL PIPE
PVC	=	POLYVINYL CHLORIDE PIPE
HDPE	=	HIGH DENSITY POLYETHYLENE
	=	FLOW LINE
STR	=	STRUCTURE
TOW OR TW	=	TOP OF WALL
SSD	=	SUB-SURFACE DRAINAGE
TOC	=	TOP OF CURB
GUT	=	GUTTER
W	=	WATER LINE
G	=	GAS LINE
OHU	=	OVERHEAD UTILITY LINE
T	=	TELEPHONE LINE
E	=	ELECTRIC LINE
TBM	=	TEMPORARY BENCHMARK
	=	PARKING COUNT

GENERAL NOTES

1. IT SHALL BE THE RESPONSIBILITY OF THE CONTRACTOR TO VERIFY WITH THE OWNER DURING BIDDING AND DURING CONSTRUCTION ACTIVITIES ALL ITEMS TO BE REMOVED. IT IS THE RESPONSIBILITY OF THE CONTRACTOR TO REMOVE ANY MATERIALS AND/OR STRUCTURES NOT LOCATED ON THIS SURVEY FOR THE INSTALLATION OF THE NEW WORK.
2. IT SHALL BE THE RESPONSIBILITY OF THE CONTRACTOR TO VERIFY ALL EXISTING UTILITIES PERTAINING TO THEIR PHASE OF WORK, AND TO VERIFY WHICH UTILITIES WILL BE REMOVED BY UTILITY COMPANY. ANY AND ALL UTILITIES NOT REMOVED BY THE UTILITY COMPANY SHALL BE REMOVED BY THE CONTRACTOR.
3. UTILITIES ARE SHOWN TO BE APPROXIMATE AND SHALL BE RELOCATED AND/OR CAPPED AND ABANDONED BEFORE CONSTRUCTION AT NO ADDITIONAL COST TO THE OWNER.
4. ALL DEMOLITION MATERIAL AND SALVAGEABLE MATERIAL IS THE PROPERTY OF THE DEMOLITION CONTRACTOR AND SHALL BE PROPERLY DISPOSED OF OFF THE SITE.
5. SLABS ON GRADE MUST BE REMOVED COMPLETELY AND TAKEN OFF THE SITE.
6. ALL UTILITIES MUST REMAIN ACTIVE FOR AREA TENANTS THAT ARE REMAINING. NO UTILITY SERVICE SHALL BE INTERRUPTED DURING THE CONSTRUCTION PROCESS.
7. BEARINGS, DIMENSIONS, AND EASEMENTS ARE SHOWN FOR REFERENCE ONLY. SEE RECORD SURVEYS AND PLATS FOR EXACT INFORMATION.
8. IF THERE ARE ANY QUESTIONS CONCERNING THIS DEMOLITION PLAN, PLEASE CONTACT THE ENGINEER BEFORE CONTINUING WORK.

WEIHE ENGINEERS, INC.
10505 NORTH COLLEGE AVENUE
INDIANAPOLIS, INDIANA 42680
(317) 846-6611 OR
TOLL FREE 1-800-452-6408

CONTACT PERSON FOR EROSION CONTROL & SEDIMENT PRACTICES

WEIHE ENGINEERS, INC.
10505 N. COLLEGE AVE.
INDIANAPOLIS, IN 46268
TELEPHONE: (317) 846-6611
FAX: (317) 843-0546
EMAIL: SHINNEMANJ@WEIHE.NET
CONTACT PERSON: JAMIE SHINNEMAN

PLAN CERTIFICATE NOTE:

ORIGINAL ALTA, TOPOGRAPHY, UTILITIES, STORM SEWERS, AND ALL OTHER EXISTING CONDITIONS ITEMS WERE PREPARED BY BANNING ENGINEERING.

FINAL DRAWINGS FOR THE KROGER SITE WERE PREPARED BY WEIHE ENGINEERS, INC. AND JAMES K. SHINNEMAN. FINAL CONSTRUCTION PLANS ARE THOSE PLANS CONTAINING A FINAL REVISION DATE AFTER 02/12/2015. WEIHE ENGINEERS, INC. AND JAMES K. SHINNEMAN ACCEPT RESPONSIBILITY ONLY FOR THE KROGER SITE IMPROVEMENTS RELATED TO THE ENGINEERING WORK SHOWN ON THESE PLANS.

EXISTING AREAS

TOTAL SITE	=	15.00	AC.
DISTURBED	=	15.00	AC.
PERVIOUS	=	14.25	AC.
IMPERVIOUS	=	0.75	AC.

EROSION CONTROL NOTES

1. ALL DISTURBED AREAS SHALL BE SODDED OR SEEDED, EXCEP BUILDING PAD AND LANDSCAPE BEDS. SEE LANDSCAPE PLANS FOR LOCATION OF LANDSCAPE BEDS.
2. INSTALL SILT FENCE ALONG ALL DOWNSTREAM SLOPES. SILT FENCE TO FOLLOW CONTOUR.
3. THERE SHALL BE NO DIRT, DEBRIS OR STORAGE OF MATERIAL IN THE STREET.
4. CONTRACTOR TO COORDINATE THE SWPPP PROGRAM WITH SPECIFICATION SECTION 312500.
5. ANY EXISTING TREE(S) THAT MAY REQUIRE REMOVAL BUT ARE NOT SHOWN ON THE PLAN AS BEING REMOVED MAY BE DONE SO, AS LONG AS THE TREE(S) ARE RELOCATED TO AN APPROVED ALTERNATIVE LOCATION ON SITE.

SCALE: 1" = 50

0 25 50 100

Know what's below. Call before you dig.
Within Indiana Call 811 or 800-382-5544
24 Hours a Day, 7 Days a Week.
PER INDIANA STATE LAW IC 8-1-26, IT IS AGAINST THE LAW TO EXCAVATE WITHOUT NOTIFYING THE UNDERGROUND LOCATION SERVICE TWO (2) WORKING DAYS BEFORE COMMENCING WORK.

10505 N. College Avenue
Indianapolis, Indiana 46280
weihe.net
317 846 - 6611
800 452 - 6408
317 843 - 0546 fax
ALLAN H. WEIHE, P.E., L.S. - FOUNDER
WEIHE ENGINEERS
Land Surveying | Civil Engineering
Landscape Architecture

PROJECT NO.	W14.0460	
DWG NAME:	w14046c-C101 swppp2.dwg	
DESIGNED BY:	RLW/SAM	
DRAWN BY:	RLW/SAM	
CHECKED BY:	JKS	
DATE:	02.12.2015	

REVISIONS AND ISSUES	DATE	BY
SUBMITTED FOR INITIAL REVIEW	02.12.2015	BJS

JAMES K. SHINNEMAN
REGISTERED
NO. 10200392
STATE OF INDIANA
PROFESSIONAL ENGINEER
NOT VALID UNLESS PRINTED

JAMES K. SHINNEMAN P.E. 10200392

PREPARED FOR:
KROGER STORE J-979

KROGER MARKETPLACE - MALLORY PARKWAY AND U.S. 31

STORMWATER POLLUTION PREVENTION PLAN 2

Part of the NE¼ of Section 15, Township 12 North, Range 4 East, Franklin Township, Johnson County, Indiana

SHEET NO.
C1.04

PROJECT NO.
W14.0460

LOCATION: H:\2014\W14046D\Engineering\design\concept\w14046c-C101 swppp2.dwg
LAYOUT: C1.04
DATE/TIME: February 12, 2015 – 7:27am
PLOTTED BY: schoeffb

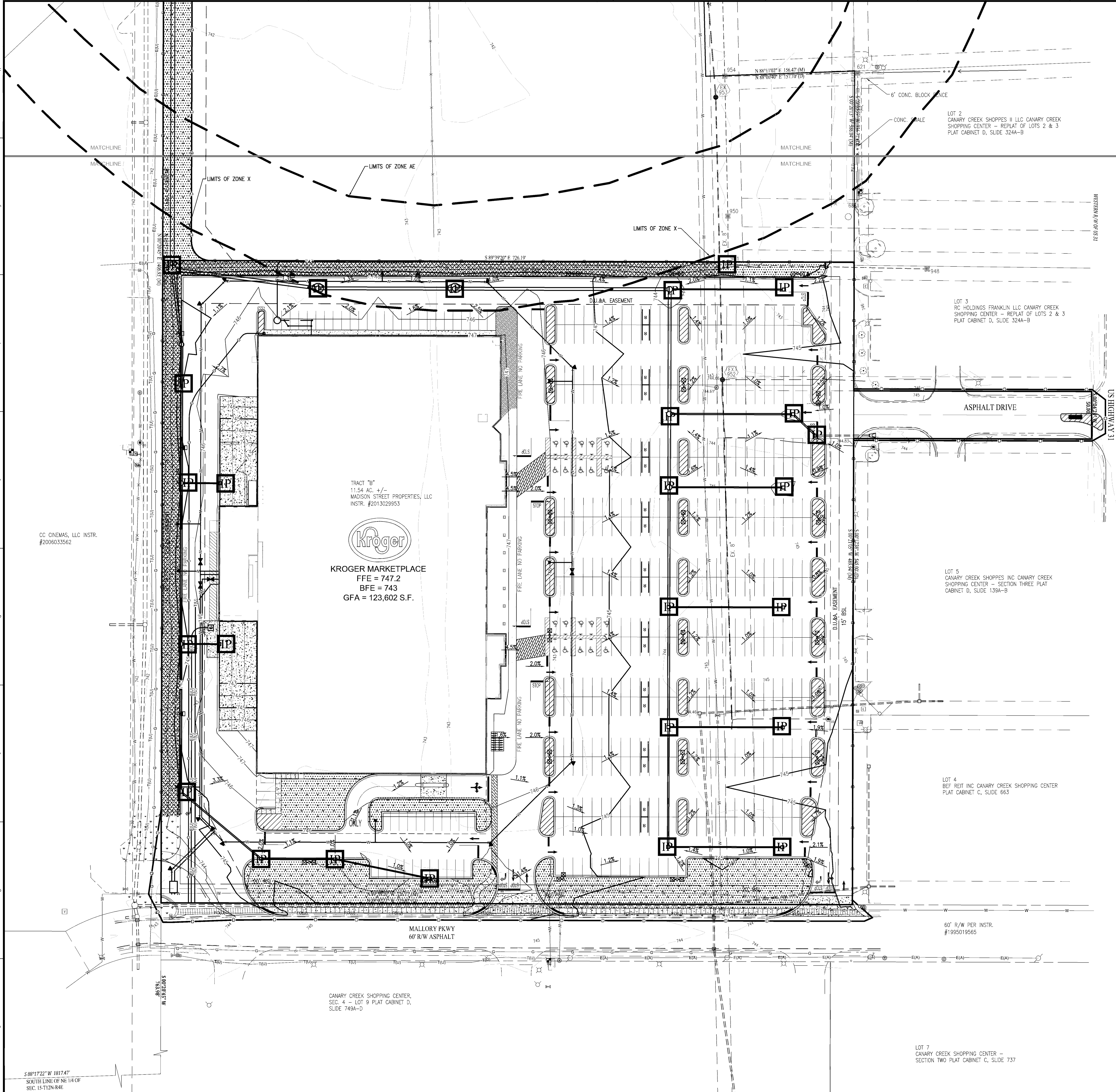

EROSION CONTROL SPECIFICATIONS

1. THIS PLAN IS DESIGNED AS AN ATTEMPT TO PREVENT ANY AND ALL SEDIMENT FROM LEAVING THE CONSTRUCTION SITE BY WAY OF EROSION. IF EROSION OF SEDIMENT FROM THE SITE IS TAKING PLACE, THE CONTRACTOR AND/OR OWNER SHALL TAKE PREVENTATIVE ACTION IMMEDIATELY. THE ENGINEER SHALL BE CONSULTED IN THE EVENT THIS HAPPENS.
2. TEMPORARY SEEDING IS TO BE APPLIED TO ANY DISTURBED AREA THAT WILL REMAIN UNALTERED IN EXCESS OF 15 DAYS.
3. PERMANENT SEEDING IS TO BE APPLIED IMMEDIATELY TO AREAS THAT HAVE ACHIEVED FINAL AND FINISHED GRADE.
4. PRESERVE EXISTING VEGETATION ON THE SITE WHENEVER AND WHEREVER POSSIBLE TO PREVENT TOPSOIL EROSION.
5. ALL SEDIMENT CAPTURING MEASURES SHALL BE IMPLEMENTED PRIOR TO THE DISTURBANCE OF THE CONSTRUCTION AREA THEY ARE INTENDED TO SERVICE. ALL EROSION CONTROL MEASURES PROPOSED ARE TO BE PROPERLY MAINTAINED TO CONTINUE THEIR EFFECTIVENESS.
6. IF GRADING OCCURS DURING THE MONTHS OF DECEMBER, JANUARY OR FEBRUARY DORMANT SEEDING PROCEDURES SHALL BE USED.
7. DURING DRY WEATHER, KEEP LAWNS WATERED WITH SPRINKLERS OR OTHER APPROVED METHODS. RESEED ANY AREAS NOT GERMINATING OR DAMAGED AT INTERVALS AS MAY BE REQUIRED ACCORDING TO SEASONAL CONDITION AND/OR CONSTRUCTION ACTIVITY. WATER GRASS AND EXECUTE NECESSARY WEEDING UNTIL FULL STAND OF GRASS HAS BEEN OBTAINED.
8. THE IMPLEMENTATION AND MAINTENANCE OF THE EROSION CONTROL IS THE SOLE RESPONSIBILITY OF THE CONTRACTOR AND/OR OWNER.
9. IT SHALL BE THE CONTRACTOR'S AND/OR OWNER'S RESPONSIBILITY TO MINIMIZE SEDIMENTATION (FROM ON-SITE CONSTRUCTION ACTIVITIES) FROM BEING DEPOSITED ONTO ADJACENT PROPERTIES AND RECEIVING STREAMS/DITCHES IN STRICT COMPLIANCE WITH "RULE 5" (327 IAC 15-5, CONSTRUCTION ACTIVITY STORM WATER RUNOFF CONTROL). IT SHALL ALSO BE THE CONTRACTOR'S AND/OR OWNER'S RESPONSIBILITY TO OBTAIN ANY APPROVALS REQUIRED FROM THE LOCAL AUTHORITY AND TO SUBMIT A COMPLETE NOTICE OF INTENT LETTER TO THE OFFICE OF WATER MANAGEMENT, INDIANA DEPARTMENT OF ENVIRONMENTAL MANAGEMENT PRIOR TO ANY CONSTRUCTION ACTIVITY.
10. FOR SEASONAL VARIATIONS - SEE SEASONAL SOIL PROTECTION CHART IN THESE PLANS.

SWPPP III LEGEND

- IP - INLET PROTECTION - USE SUBSURFACE INLET PROTECTION WITH OVERFLOW CAPABILITY (DANDY SAC)
- PERMANENT/TEMPORARY SEEDING USE PLANTING CHART
- EROSION CONTROL BLANKET - USE S150BN BIO-NET AS SUPPLIED BY NORTH AMERICAN GREEN OR APPROVED EQUAL. AREA MUST ALSO BE SEEDED.
- MULCHED AREA
- TURF REINFORCEMENT MAT (PYRAMAT) BY PROPEX, OR EQUAL AT THE POND SPILLWAY
- D - LIMITS OF DISTURBANCE (CONSTRUCTION LIMITS)
- * - SITE DISCHARGE POINT

DISTURBED ACREAGE = 15.000± AC.

-WARNING-
THIS PLAN TO BE USED FOR EROSION CONTROL PURPOSES ONLY. ADDITIONAL EROSION CONTROL MEASURES MAY BE REQUIRED IN THE FIELD BY THE INSPECTOR.

LAND DESCRIPTION

SURVEYED LEGAL DESCRIPTION

ORIGINAL SURVEYED DESCRIPTION

A PART OF THE NORTHEAST QUARTER OF SECTION 15, TOWNSHIP 12 NORTH, RANGE 4 EAST OF THE SECOND PRINCIPAL MERIDIAN, CITY OF FRANKLIN, JOHNSON COUNTY, INDIANA, MORE PARTICULARLY DESCRIBED AS FOLLOWS:
COMMENCING AT THE NORTHEAST CORNER OF SAID QUARTER PROCEED THENCE SOUTH 00 DEGREES 11 MINUTES 50 SECONDS EAST ALONG THE EAST LINE OF SAID QUARTER 766.97 FEET TO THE NORTH LINE OF THE LANDS OF THE NATIONAL BANK OF GREENWOOD AS DESCRIBED IN DEED BOOK 245, PAGE 193 IN THE OFFICE OF THE RECORDER OF JOHNSON COUNTY; PROCEED THENCE ALONG THE NORTH LINE OF SAID BANK LANDS SOUTH 88 DEGREES 00 MINUTES 40 SECONDS WEST 317.73 FEET TO THE WEST LINE OF SAID BANK LANDS; THENCE SOUTH 05 DEGREES 27 MINUTES 00 SECONDS EAST ALONG SAID WEST LINE 200.35 FEET TO THE NORTHWEST CORNER OF THE LANDS OF CAROLYN ROGERS AS DESCRIBED IN INSTRUMENT NUMBER 2013003799 IN SAID RECORDER'S OFFICE, MARKED BY A REBAR WITH CAP STAMPED ESW LS20200016" (HEREAFTER REFERRED TO AS ESW REBAR) THENCE SOUTH 01 DEGREES 03 MINUTES 40 SECONDS EAST ALONG THE WEST LINE OF SAID ROGERS LANDS 150.02 FEET TO THE SOUTHWEST CORNER OF SAID ROGERS LANDS, MARKED BY AN ESW REBAR; THENCE NORTH 88 DEGREES 11 MINUTES 02 SECONDS EAST ALONG THE SOUTH LINE OF SAID ROGERS LANDS 156.47 FEET TO THE SOUTHWEST CORNER OF LOT 1 OF PRESNELL/MORTON STREET MINOR SUBDIVISION AS RECORDED IN PLAT CABINET C, SLIDE 640 IN SAID RECORDER'S OFFICE; THENCE SOUTH 00 DEGREES 20 MINUTES 13 SECONDS WEST ALONG THE WEST LINE OF LOT 2 OF CANARY CREEK SHOPPING CENTER REPLAT OF LOTS 2 & 3, THE PLAT OF WHICH IS RECORDED IN PLAT CABINET D, SLIDE 324A-B IN SAID RECORDER'S OFFICE 200.98 FEET TO THE POINT OF BEGINNING, MARKED BY A 5/8 INCH DIAMETER REBAR WITH CAP STAMPED "BANNING ENG FIRM #0060" (HEREAFTER REFERRED TO AS BANNING REBAR); THENCE CONTINUE SOUTH 00 DEGREES 20 MINUTES 13 SECONDS WEST 135.06 FEET TO THE SOUTHWEST CORNER OF LOT 3 IN CANARY CREEK SHOPPING CENTER REPLAT OF LOTS 2 & 3 AS RECORDED IN PLAT CABINET D, SLIDE 324A-B, MARKED BY A MAGSPIKE WITH WASHER STAMPED "BANNING ENG FIRM #0060'; THENCE SOUTH 89 DEGREES 38 MINUTES 55 SECONDS EAST ALONG THE SOUTH LINE OF SAID LOT 3 A DISTANCE OF 249.77 FEET TO THE WESTERN RIGHT OF WAY FOR US HIGHWAY 31, MARKED BY A BANNING BEHAR; THENCE SOUTH 00 DEGREES 04 MINUTES 24 SECONDS WEST ALONG SAID RIGHT OF WAY 50,00 FEET TO THE NORTHEAST CORNER OF LOT S IN CANARY CREEK SHOPPING CENTER, SECTION THREE AS RECORDED IN PLAT CABINET I), SLIDE 139A-B, MARKED BY A MAGSPIKE WITH WASHER STAMPED "BANNING ENG FIRM #0060"; THENCE NORTH 89 DEGREES 38 MINUTES 55 SECONDS WEST ALONG THE NORTH LINE OF SAID LOT S A DISTANCE OF 250,00 FEET TO AN IRON REBAR WITH SMASHED CAP; THENCE SOUTH 00 DEGREES 21 MINUTES 05 SECONDS WEST ALONG THE WEST LINE AND ITS EXTENSION OF SAID LOT 5 A DISTANCE OF 489.94 FEET TO THE NORTHERN RIGHT OF WAY FOR MALLORY PARKWAY; THENCE NORTH 89 DEGREES 39 MINUTES 20 SECONDS WEST ALONG SAID RIGHT OF WAY 726.17 FEET TO THE EASTERN LINE OF THE LANDS OF CC CINEMAS, LLC AS DESCRIBED IN INSTRUMENT NUMBER 2006033562 IN SAID RECORDER'S OFFICE; THENCE NORTH 00 DEGREES 20 MINUTES 45 SECONDS EAST ALONG SAID EAST LINE 675.00 FEET TO A BANNING REBAR; THENCE SOUTH 89 DEGREES 39 MINUTES 20 SECONDS EAST 726.19 FEET TO THE POINT OF BEGINNING, AND CONTAINING 11.540 ACRES OF LAND, MORE OR LESS.

BENCHMARK INFORMATION

BENCHMARK INFORMATION
DNR TBM CD 1, 1988 IN JOHNSON COUNTY, FRANKLIN QUADRANGLE, IN THE NE ¼ OF SECTION 10, TOWNSHIP 12 NORTH, RANGE 4 EAST, 2ND P.M.; AT FRANKLIN; AT THE U.S. 31 BRIDGE OVER CANARY DITCH; SET IN THE TOP OF THE SOUTHEAST CONCRETE WINGWALL OF THE BRIDGE, 25.8 FEET EAST OF THE CENTERLINE OF THE BRIDGE, 0.6 FOOT NORTH OF THE SOUTH END OF THE WINGWALL 1.0 FOOT BELOW THE LEVEL OF THE ROAD; A "PK" NAIL SET IN A DRILL HOLE, INSIDE A CUT CIRCLE.
2ND ORDER ELEVATION
REVISED ELEVATION 229,240 METERS N,G,V,D, 1929
752.099 FEET N.G.V.D. 1929 (751.693 FEET N.A.V.D.1988)

TBM #1 ELEV: 745.81 CUT SQUARE ON TOP ON A CONCRETE LIGHT BASE ON THE WEST EDGE OF CONCRETE, DUE WEST OF THE SOUTHWEST CORNER OF THE SHERWIN WILLIAMS BUILDING SQUARE IS APPROXIMATELY 15 FEET NORTHEAST OF A DRIVE STUB BEHIND THE BUILDING.

TBM #2 ELEV: 747.77 CUT SQUARE IN THE NORTHWEST CORNER OF A CONCRETE WATER VAULT ON THE EAST SIDE OF THE MIDDLE KOHL'S ENTRANCE LOCATED ON THE SOUTH SIDE OF MALLORY PARKWAY.

TBM #3 ELEV: 742.94 CUT SQUARE IN THE SOUTHEAST CORNER OF A CONCRETE WATER VAULT DUE EAST OF THE SOUTHEAST CORNER OF CANARY CREEK CINEMA BUILDING.

CONTACT PERSON FOR EROSION CONTROL & SEDIMENT PRACTICES

WEIHE ENGINEERS, INC.
10505 N. COLLEGE AVE.
INDIANAPOLIS, IN 46268
TELEPHONE: (317) 846-6611
FAX: (317) 843-0546
EMAIL: SHINNEMANJ@WEIHE.NET
CONTACT PERSON: JAMIE SHINNEMAN

EROSION CONTROL NOTES

1. ALL DISTURBED AREAS SHALL BE SODDED OR SEEDED, EXCEPT BUILDING PAD AND LANDSCAPE BEDS. SEE LANDSCAPE PLANS FOR LOCATION OF LANDSCAPE BEDS.
2. INSTALL SILT FENCE ALONG ALL DOWNSTREAM SLOPES. SILT FENCE TO FOLLOW CONTOUR.
3. THERE SHALL BE NO DIRT, DEBRIS OR STORAGE OF MATERIAL IN THE STREET.
4. CONTRACTOR TO COORDINATE THE SWPPP PROGRAM WITH SPECIFICATION SECTION 312500.
5. THIS PLAN INDICATES EROSION CONTROL MEASURES REQUIRED AFTER SOIL STRIPPING AND PAD BUILDING HAS TAKEN PLACE. COORDINATE WITH DEVELOPER FOR MEASURES REQUIRED UNTIL PROPERTY TURNED OVER FOR DEVELOPMENT. COORDINATE WITH SOIL CONSERVATION DISTRICT REPRESENTATIVE FOR ANY OTHER MEASURES REQUIRED DUE TO SITE CONDITIONS.

PLAN CERTIFICATE NOTE:

ORIGINAL ALTA, TOPOGRAPHY, UTILITIES, STORM SEWERS, AND ALL OTHER EXISTING CONDITIONS ITEMS WERE PREPARED BY BANNING ENGINEERING.

FINAL DRAWINGS FOR THE KROGER SITE WERE PREPARED BY WEIHE ENGINEERS, INC. AND JAMES K. SHINNEMAN. FINAL CONSTRUCTION PLANS ARE THOSE PLANS CONTAINING A FINAL REVISION DATE AFTER 02/12/2015. WEIHE ENGINEERS, INC. AND JAMES K. SHINNEMAN ACCEPT RESPONSIBILITY ONLY FOR THE KROGER SITE IMPROVEMENTS RELATED TO THE ENGINEERING WORK SHOWN ON THESE PLANS.

SCALE: 1" = 50
0 25 50 100

Know what's **below.** **Call** before you dig.
Within Indiana Call
811 or 800-382-5544
24 Hours a Day, 7 Days a Week.
PER INDIANA STATE LAW IC 8-1-26. IT IS AGAINST THE LAW TO EXCAVATE WITHOUT NOTIFYING THE UNDERGROUND LOCATION SERVICE TWO (2) WORKING DAYS BEFORE COMMENCING WORK.

WEIHE ENGINEERS
Land Surveying | Civil Engineering
Landscape Architecture
10505 N. College Avenue
Indianapolis, Indiana 46280
weihe.net
317 846 - 6611
800 452 - 6408
317 843 - 0546 fax
ALLAN H. WEIHE, P.E., L.S. - FOUNDER

PROJECT NO.: W14.0460
DWG NAME: w140460-C102 swppp2.dwg
DESIGNED BY: RLW/RAM
DRAWN BY: RLW/RAM
CHECKED BY: JKS
DATE: 02.12.2015

REVISIONS AND ISSUES: 02.12.2015 BJS SUBMITTED FOR INITIAL REVIEW

JAMES K. SHINNEMAN P.E. 10200392

PREPARED FOR:
KROGER STORE J-979
KROGER MARKETPLACE - MALLORY PARKWAY AND U.S. 31
STORMWATER POLLUTION PREVENTION PLAN 3
Part of the NE/4 of Section 15, Township 12 North, Range 4 East, Franklin Township, Johnson County, Indiana

SHEET NO. C1.05
PROJECT NO. W14.0460

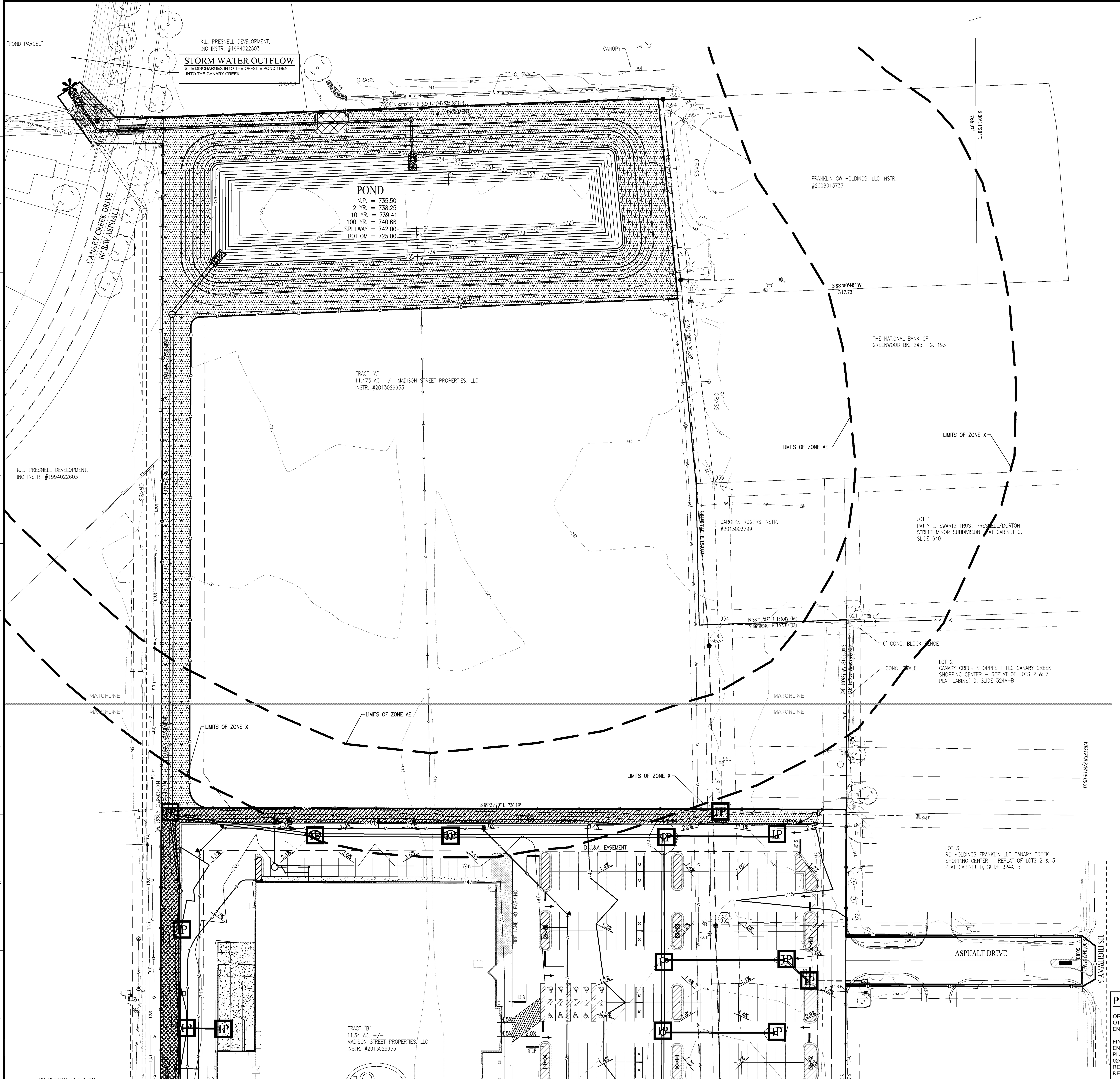

EROSION CONTROL SPECIFICATIONS

1. THIS PLAN IS DESIGNED AS AN ATTEMPT TO PREVENT ANY AND ALL SEDIMENT FROM LEAVING THE CONSTRUCTION SITE BY WAY OF EROSION. IF EROSION OF SEDIMENT FROM THE SITE IS TAKING PLACE, THE CONTRACTOR AND/OR OWNER SHALL TAKE PREVENTATIVE ACTION IMMEDIATELY. THE ENGINEER SHALL BE CONSULTED IN THE EVENT THIS HAPPENS.
2. TEMPORARY SEEDING IS TO BE APPLIED TO ANY DISTURBED AREA THAT WILL REMAIN UNALTERED IN EXCESS OF 15 DAYS.
3. PERMANENT SEEDING IS TO BE APPLIED IMMEDIATELY TO AREAS THAT HAVE ACHIEVED FINAL AND FINISHED GRADE.
4. PRESERVE EXISTING VEGETATION ON THE SITE WHENEVER AND WHEREVER POSSIBLE TO PREVENT TOPSOIL EROSION.
5. ALL SEDIMENT CAPTURING MEASURES SHALL BE IMPLEMENTED PRIOR TO THE DISTURBANCE OF THE CONSTRUCTION AREA THEY ARE INTENDED TO SERVICE. ALL EROSION CONTROL MEASURES PROPOSED ARE TO BE PROPERLY MAINTAINED TO CONTINUE THEIR EFFECTIVENESS.
6. IF GRADING OCCURS DURING THE MONTHS OF DECEMBER, JANUARY OR FEBRUARY DORMANT SEEDING PROCEDURES SHALL BE USED.
7. DURING DRY WEATHER, KEEP LAWNS WATERED WITH SPRINKLERS OR OTHER APPROVED METHODS. RESEED ANY AREAS NOT GERMINATING OR DAMAGED AT INTERVALS AS MAY BE REQUIRED ACCORDING TO SEASONAL CONDITION AND/OR CONSTRUCTION ACTIVITY. WATER GRASS AND EXECUTE NECESSARY WEEDING UNTIL FULL STAND OF GRASS HAS BEEN OBTAINED.
8. THE IMPLEMENTATION AND MAINTENANCE OF THE EROSION CONTROL IS THE SOLE RESPONSIBILITY OF THE CONTRACTOR AND/OR OWNER.
9. IT SHALL BE THE CONTRACTOR'S AND/OR OWNER'S RESPONSIBILITY TO MINIMIZE SEDIMENTATION (FROM ON-SITE CONSTRUCTION ACTIVITIES) FROM BEING DEPOSITED ONTO ADJACENT PROPERTIES AND RECEIVING STREAMS/DITCHES IN STRICT COMPLIANCE WITH "RULE 5" (327 IAC 15-5, CONSTRUCTION ACTIVITY STORM WATER RUNOFF CONTROL). IT SHALL ALSO BE THE CONTRACTOR'S AND/OR OWNER'S RESPONSIBILITY TO OBTAIN ANY APPROVALS REQUIRED FROM THE LOCAL AUTHORITY AND TO SUBMIT A COMPLETE NOTICE OF INTENT LETTER TO THE OFFICE OF WATER MANAGEMENT, INDIANA DEPARTMENT OF ENVIRONMENTAL MANAGEMENT PRIOR TO ANY CONSTRUCTION ACTIVITY.
10. FOR SEASONAL VARIATIONS - SEE SEASONAL SOIL PROTECTION CHART IN THESE PLANS.

SWPPP III LEGEND

- IP - INLET PROTECTION - USE SUBSURFACE INLET PROTECTION WITH OVERFLOW CAPABILITY (DANDY SAC)
- PERMANENT/TEMPORARY SEEDING USE PLANTING CHART
- EROSION CONTROL BLANKET - USE S150BN BIO-NET AS SUPPLIED BY NORTH AMERICAN GREEN OR APPROVED EQUAL. AREA MUST ALSO BE SEEDED.
- MULCHED AREA
- TURF REINFORCEMENT MAT (PYRAMAT) BY PROPEX, OR EQUAL AT THE POND SPILLWAY
- D - LIMITS OF DISTURBANCE (CONSTRUCTION LIMITS)
- * - SITE DISCHARGE POINT

DISTURBED ACREAGE
= 15.000± AC.

-WARNING-
THIS PLAN TO BE USED FOR EROSION CONTROL PURPOSES ONLY. ADDITIONAL EROSION CONTROL MEASURES MAY BE REQUIRED IN THE FIELD BY THE INSPECTOR.

LAND DESCRIPTION

SURVEYED LEGAL DESCRIPTION

ORIGINAL SURVEYED DESCRIPTION

A PART OF THE NORTHEAST QUARTER OF SECTION 15, TOWNSHIP 12 NORTH, RANGE 4 EAST OF THE SECOND PRINCIPAL MERIDIAN, CITY OF FRANKLIN, JOHNSON COUNTY, INDIANA, MORE PARTICULARLY DESCRIBED AS FOLLOWS:
COMMENCING AT THE NORTHEAST CORNER OF SAID QUARTER PROCEED THENCE SOUTH 00 DEGREES 11 MINUTES 50 SECONDS EAST ALONG THE EAST LINE OF SAID QUARTER 766.97 FEET TO THE NORTH LINE OF THE LANDS OF THE NATIONAL BANK OF GREENWOOD AS DESCRIBED IN DEED BOOK 245, PAGE 193 IN THE OFFICE OF THE RECORDER OF JOHNSON COUNTY; PROCEED THENCE ALONG THE NORTH LINE OF SAID BANK LANDS SOUTH 88 DEGREES 00 MINUTES 40 SECONDS WEST 317.73 FEET TO THE WEST LINE OF SAID BANK LANDS; THENCE SOUTH 05 DEGREES 27 MINUTES 00 SECONDS EAST ALONG SAID WEST LINE 200.35 FEET TO THE NORTHWEST CORNER OF THE LANDS OF CAROLYN ROGERS AS DESCRIBED IN INSTRUMENT NUMBER 2013003799 IN SAID RECORDER'S OFFICE, MARKED BY A REBAR WITH CAP STAMPED ESW LS20200016" (HEREAFTER REFERRED TO AS ESW REBAR) THENCE SOUTH 01 DEGREES 03 MINUTES 40 SECONDS EAST ALONG THE WEST LINE OF SAID ROGERS LANDS 150.02 FEET TO THE SOUTHWEST CORNER OF SAID ROGERS LANDS, MARKED BY AN ESW REBAR; THENCE NORTH 88 DEGREES 11 MINUTES 02 SECONDS EAST ALONG THE SOUTH LINE OF SAID ROGERS LANDS 156.47 FEET TO THE SOUTHWEST CORNER OF LOT 1 OF PRESNELL/MORTON STREET MINOR SUBDIVISION AS RECORDED IN PLAT CABINET C, SLIDE 640 IN SAID RECORDER'S OFFICE; THENCE SOUTH 00 DEGREES 20 MINUTES 13 SECONDS WEST ALONG THE WEST LINE OF LOT 2 OF CANARY CREEK SHOPPING CENTER REPLAT OF LOTS 2 & 3, THE PLAT OF WHICH IS RECORDED IN PLAT CABINET D, SLIDE 324A-B IN SAID RECORDER'S OFFICE 200.98 FEET TO THE POINT OF BEGINNING, MARKED BY A 5/8 INCH DIAMETER REBAR WITH CAP STAMPED "BANNING ENG FIRM #0060" (HEREAFTER REFERRED TO AS BANNING REBAR); THENCE CONTINUE SOUTH 00 DEGREES 20 MINUTES 13 SECONDS WEST 135.06 FEET TO THE SOUTHWEST CORNER OF LOT 3 IN CANARY CREEK SHOPPING CENTER REPLAT OF LOTS 2 & 3 AS RECORDED IN PLAT CABINET D, SLIDE 324A-B, MARKED BY A MAGSPIKE WITH WASHER STAMPED "BANNING ENG FIRM #0060'; THENCE SOUTH 89 DEGREES 38 MINUTES 55 SECONDS EAST ALONG THE SOUTH LINE OF SAID LOT 3 A DISTANCE OF 249.77 FEET TO THE WESTERN RIGHT OF WAY FOR US HIGHWAY 31, MARKED BY A BANNING BEHAR; THENCE SOUTH 00 DEGREES 04 MINUTES 24 SECONDS WEST ALONG SAID RIGHT OF WAY 50,00 FEET TO THE NORTHEAST CORNER OF LOT S IN CANARY CREEK SHOPPING CENTER, SECTION THREE AS RECORDED IN PLAT CABINET I), SLIDE 139A-B, MARKED BY A MAGSPIKE WITH WASHER STAMPED "BANNING ENG FIRM #0060"; THENCE NORTH 89 DEGREES 38 MINUTES 55 SECONDS WEST ALONG THE NORTH LINE OF SAID LOT S A DISTANCE OF 250,00 FEET TO AN IRON REBAR WITH SMASHED CAP; THENCE SOUTH 00 DEGREES 21 MINUTES 05 SECONDS WEST ALONG THE WEST LINE AND ITS EXTENSION OF SAID LOT 5 A DISTANCE OF 489.94 FEET TO THE NORTHERN RIGHT OF WAY FOR MALLORY PARKWAY; THENCE NORTH 89 DEGREES 39 MINUTES 20 SECONDS WEST ALONG SAID RIGHT OF WAY 726.17 FEET TO THE EASTERN LINE OF THE LANDS OF CC CINEMAS, LLC AS DESCRIBED IN INSTRUMENT NUMBER 2006033562 IN SAID RECORDER'S OFFICE; THENCE NORTH 00 DEGREES 20 MINUTES 45 SECONDS EAST ALONG SAID EAST LINE 675.00 FEET TO A BANNING REBAR; THENCE SOUTH 89 DEGREES 39 MINUTES 20 SECONDS EAST 726.19 FEET TO THE POINT OF BEGINNING, AND CONTAINING 11.540 ACRES OF LAND, MORE OR LESS.

BENCHMARK INFORMATION
DNR TBM CD 1, 1988 IN JOHNSON COUNTY, FRANKLIN QUADRANGLE, IN THE NE ¼ OF SECTION 10, TOWNSHIP 12 NORTH, RANGE 4 EAST, 2ND P.M.; AT FRANKLIN; AT THE U.S. 31 BRIDGE OVER CANARY DITCH; SET IN THE TOP OF THE SOUTHEAST CONCRETE WINGWALL OF THE BRIDGE, 25.8 FEET EAST OF THE CENTERLINE OF THE BRIDGE, 0.6 FOOT NORTH OF THE SOUTH END OF THE WINGWALL 1.0 FOOT BELOW THE LEVEL OF THE ROAD; A "PK" NAIL SET IN A DRILL HOLE, INSIDE A CUT CIRCLE.
2ND ORDER ELEVATION
REVISED ELEVATION 229,240 METERS N,G,V,D, 1929
752.099 FEET N.G.V.D. 1929 (751.693 FEET N.A.V.D.1988)

TBM #1 ELEV: 745.81 CUT SQUARE ON TOP ON A CONCRETE LIGHT BASE ON THE WEST EDGE OF CONCRETE, DUE WEST OF THE SOUTHWEST CORNER OF THE SHERWIN WILLIAMS BUILDING SQUARE IS APPROXIMATELY 15 FEET NORTHEAST OF A DRIVE STUB BEHIND THE BUILDING.

TBM #2 ELEV: 747.77 CUT SQUARE IN THE NORTHWEST CORNER OF A CONCRETE WATER VAULT ON THE EAST SIDE OF THE MIDDLE KOHL'S ENTRANCE LOCATED ON THE SOUTH SIDE OF MALLORY PARKWAY.

TBM #3 ELEV: 742.94 CUT SQUARE IN THE SOUTHEAST CORNER OF A CONCRETE WATER VAULT DUE EAST OF THE SOUTHEAST CORNER OF CANARY CREEK CINEMA BUILDING.

CONTACT PERSON FOR EROSION CONTROL & SEDIMENT PRACTICES

WEIHE ENGINEERS, INC.
10505 N. COLLEGE AVE.
INDIANAPOLIS, IN 46268
TELEPHONE: (317) 846-6611
FAX: (317) 843-0546
EMAIL: SHINNEMANJ@WEIHE.NET
CONTACT PERSON: JAMIE SHINNEMAN

EROSION CONTROL NOTES

1. ALL DISTURBED AREAS SHALL BE SODDED OR SEEDED, EXCEPT BUILDING PAD AND LANDSCAPE BEDS. SEE LANDSCAPE PLANS FOR LOCATION OF LANDSCAPE BEDS.
2. INSTALL SILT FENCE ALONG ALL DOWNSTREAM SLOPES. SILT FENCE TO FOLLOW CONTOUR.
3. THERE SHALL BE NO DIRT, DEBRIS OR STORAGE OF MATERIAL IN THE STREET.
4. CONTRACTOR TO COORDINATE THE SWPPP PROGRAM WITH SPECIFICATION SECTION 312500.
5. THIS PLAN INDICATES EROSION CONTROL MEASURES REQUIRED AFTER SOIL STRIPPING AND PAD BUILDING HAS TAKEN PLACE. COORDINATE WITH DEVELOPER FOR MEASURES REQUIRED UNTIL PROPERTY TURNED OVER FOR DEVELOPMENT. COORDINATE WITH SOIL CONSERVATION DISTRICT REPRESENTATIVE FOR ANY OTHER MEASURES REQUIRED DUE TO SITE CONDITIONS.

PLAN CERTIFICATE NOTE:

ORIGINAL ALTA, TOPOGRAPHY, UTILITIES, STORM SEWERS, AND ALL OTHER EXISTING CONDITIONS ITEMS WERE PREPARED BY BANNING ENGINEERING.

FINAL DRAWINGS FOR THE KROGER SITE WERE PREPARED BY WEIHE ENGINEERS, INC. AND JAMES K. SHINNEMAN. FINAL CONSTRUCTION PLANS ARE THOSE PLANS CONTAINING A FINAL REVISION DATE AFTER 02/12/2015. WEIHE ENGINEERS, INC. AND JAMES K. SHINNEMAN ACCEPT RESPONSIBILITY ONLY FOR THE KROGER SITE IMPROVEMENTS RELATED TO THE ENGINEERING WORK SHOWN ON THESE PLANS.

SCALE: 1" = 50
0 25 50 100

811
Know what's below. Call before you dig.
Within Indiana Call
811 or 800-382-5544
24 Hours a Day, 7 Days a Week.
PER INDIANA STATE LAW IC 8-1-26. IT IS AGAINST THE LAW TO EXCAVATE WITHOUT NOTIFYING THE UNDERGROUND LOCATION SERVICE TWO (2) WORKING DAYS BEFORE COMMENCING WORK.

10505 N. College Avenue
Indianapolis, Indiana 46280
weihe.net
317 846 - 6611
800 452 - 6408
317 843 - 0546 fax
ALLAN H. WEIHE, P.E., L.S. - FOUNDER
WEIHE ENGINEERS
Land Surveying | Civil Engineering
Landscape Architecture

PROJECT NO.:	W14.0460
DWG NAME:	w14460-C102 swppp2.dwg
DESIGNED BY:	RLW/RAM
DRAWN BY:	RLW/RAM
CHECKED BY:	JKS
DATE:	02.12.2015

DATE	BY	REVISIONS AND ISSUES
02.12.2015	BJS	SUBMITTED FOR INITIAL REVIEW

JAMES K. SHINNEMAN P.E. 10200392

PREPARED FOR:
KROGER STORE J-979
KROGER MARKETPLACE - MALLORY PARKWAY AND U.S. 31
STORMWATER POLLUTION PREVENTION PLAN 3
Part of the NE¼ of Section 15, Township 12 North, Range 4 East, Franklin Township, Johnson County, Indiana

SHEET NO.
C1.06
PROJECT NO.
W14.0460

SECTION A - CONSTRUCTION PLAN ELEMENTS

A1 PLAN INDEX - SEE BELOW
A2 11"x17" PLAT - (REDUCTION OF STORMWATER POLLUTION PREVENTION PLAN TO BE SUBMITTED WITH FULL SIZE PLAN)
A3 PROJECT NARRATIVE - THIS IS A PROPOSED COMMERCIAL DEVELOPMENT ON APPROXIMATELY 15.00 ACRES. THE CONSTRUCTION SHALL CONSIST OF 1 BUILDING, ASPHALT PARKING, AND ENTRY DRIVES.
A4 VICINITY MAP - SEE BOTTOM RIGHT SIDE OF THIS SHEET
A5 LEGAL DESCRIPTION - SEE RIGHT SIDE OF SHEETS CC1.05 AND C1.06, LAT: 39°29'19"N LONG: 86°03'59"W
A6 LOCATION OF ALL LOTS AND PROPOSED SITE IMPROVEMENTS - SEE STORMWATER POLLUTION PREVENTION PLAN
A7 HYDROLOGIC UNIT CODE (14 DIGIT) - EAST SIDE: 05120204090040, WEST SIDE: 05120204090030
A8 NOTATION OF ANY STATE OR FEDERAL WATER QUALITY PERMITS - NOT APPLICABLE
A9 SPECIFIC POINTS WHERE STORMWATER DISCHARGE LEAVES SITE - THE SITE IS RATHER FLAT AND SEEKS ITS COURSE TO THE EXISTING INFRASTRUCTURE. THE FINAL PRODUCT CAPTURES THE WATERSHED AND PIPES IT UNDERGROUND TO AN ONSITE POND, THEN EVENTUALLY INTO CANARY CREEK WEST OF THE SITE.
A10 LOCATION AND NAME OF WETLANDS, LAKES AND WATER COURSES ON AND ADJACENT TO SITE - CANARY CREEK IS OFFSITE AND TO THE WEST OF THE SITE
A11 IDENTIFICATION OF ALL RECEIVING WATERS - CANARY CREEK
A12 IDENTIFICATION OF POTENTIAL DISCHARGE TO GROUND WATER - NOT APPLICABLE
A13 100 YEAR FLOODPLAINS, FLOODWAYS, AND FLOODWAY FRINGES - THE 100 YEAR ELEVATION WAS ESTABLISHED AT THE 743 ELEVATION FOR CANARY CREEK.
A14 PRE-CONSTRUCTION AND POST-CONSTRUCTION ESTIMATE OF PEAK DISCHARGE (10 YEAR) -
Q_{10pre} = 5.48 cfs Q_{10post} = 2.14 cfs
A15 ADJACENT LANDUSE INCLUDING UPSTREAM WATERSHED - SEE STORMWATER POLLUTION PREVENTION PLAN
A16 CONSTRUCTION LIMITS - SEE STORMWATER POLLUTION PREVENTION PLAN
A17 IDENTIFICATION OF EXISTING VEGETATIVE COVER - ROW CROPS
A18 SOILS MAP W/ SOIL DESCRIPTIONS AND LIMITATIONS - SEE BOTTOM RIGHT SIDE OF THIS SHEET
A19 LOCATIONS, SIZE & DIMENSIONS OF PROPOSED STORMWATER SYSTEMS - GRADING PLANS (C3.01 TO C3.02) AND DRAINAGE PLANS (C6.01 TO C6.02)
A20 PLANS FOR OFF-SITE CONSTRUCTION ACTIVITIES - NOT APPLICABLE
A21 LOCATIONS OF PROPOSED SOIL STOCKPILES AND/OR BORROW/DISPOSAL AREAS - N/A AT THIS TIME. IF STOCKPILES ARE USED, THEY MUST BE RINGED WITH SILT FENCE AND STABILIZED IF LEFT IN UNDISTURBED FOR MORE THAN 1 DAYS.
A22 EXISTING SITE TOPOGRAPHY - THE SITE IS BASICALLY SITTING AT THE 743 ELEVATION ON ALL SIDES. THE SITE IS RATHER FLAT.
A23 PROPOSED FINAL TOPOGRAPHY - THE PROPOSED GRADES WILL FOLLOW THE SAME WATERSHED PATTERN BASED OFF OF THE EXISTING CONDITIONS. THE SITE WILL DRAIN FROM THE SOUTH TO THE NORTH PART OF THE COMBINED TRACT.

SECTION B - SWPPP - CONSTRUCTION PHASE

B1 DESCRIPTION OF POTENTIAL POLLUTANT SOURCES - POTENTIAL POLLUTANTS FROM CONSTRUCTION ACTIVITY SUCH AS ASPHALT FROM PAVING; CONCRETE FROM CURBING, SIDEWALKS, OIL, GREASE, ANTIFREEZE, GASOLINE AND DIESEL FUEL FROM CONSTRUCTION EQUIPMENT; SOIL EROSION; FERTILIZER AND PESTICIDES FROM LANDSCAPING AND TRASH SHOULD BE PROPERLY ATTENDED TO TO REDUCE THE CONTAMINANTS FROM ENTERING THE STORM SYSTEM. TRASH SHOULD BE CLEANED UP TO REDUCE CLOGGING OF STORM SYSTEMS AND REDUCE POTENTIAL BACTERIA AND/OR OTHER BIOLOGICAL AGENTS FROM ENTERING IN THE STORM SYSTEM.
B2 SEQUENCE DESCRIBING STORMWATER QUALITY MEASURE IMPLEMENTATION RELATIVE TO LAND DISTURBING ACTIVITIES -
1. A PRE-CONSTRUCTION MEETING WITH THE CITY OF FRANKLIN IS REQUIRED PRIOR TO THE COMMENCEMENT OF ANY EARTHWORK. ADDITIONALLY, IDEM IS REQUIRED TO BE CONTACTED AT LEAST 48 HOURS PRIOR TO CONSTRUCTION.
2. CONSTRUCTION ENTRANCE - REMOVE TOPSOIL AND PLACE STONE AT ACCESS POINT ALONG MALLORY PARKWAY.
3. INSTALL SILT FENCING AND ALL OTHER EROSION CONTROL MEASURES PRIOR TO ANY EARTH MOVING.
4. POST ALL APPLICABLE SIGNS, INCLUDING THE NOTICE OF INTENT (NOI), AND HAVE THIS SWPPP WITH EROSION AND SEDIMENT CONTROL PLANS AT THE SITE FOR CONTINUAL USE AND MODIFICATION. (SEE ATTACHED "CONSTRUCTION SITE NOTICE" (FOR POSTING AT THE CONSTRUCTION ENTRANCE).
5. PHASING OF WORK TO ALLOW EXISTING VEGETATIVE AREAS OR BUFFERS TO REMAIN AS LONG AS POSSIBLE IS ENCOURAGED.
6. EROSION CONTROLS MUST BE INSPECTED AS SPECIFIED IN SECTION VIA AND PER THE ATTACHED INSPECTION CHECKLIST.
7. INSTALL ANY SEDIMENT BASINS PER THE SITE DRAWINGS, AS SOON AS POSSIBLE, DURING THE CLEARING AND EXCAVATION OF THE SITE. PROVIDE TEMPORARY GRADING TO DIRECT WATER TO BASINS.
8. EARTHWORK - STRIP TOPSOIL, BEGIN ROUGH GRADING AND PREPARE BUILDING PAD AND ROUGH GRADE.
9. STORM SEWER - INSTALL STORM SEWER SYSTEM, UNDERGROUND DETENTION, AND CORRESPONDING INLET PROTECTION.
10. SANITARY SEWER - INSTALL SANITARY SEWER SYSTEMS
11. REMOVE ACCUMULATED SEDIMENT FROM EROSION CONTROLS AS NECESSARY.
12. CONTINUE INSTALLING/MODIFYING EROSION CONTROLS AS THE CONSTRUCTION OF SITE UTILITIES, FOUNDATIONS, AND STRUCTURES CHANGE THE TOPOGRAPHY OF THE SITE.
13. ESTABLISH TEMPORARY STABILIZATION/SEEDING ON ALL AREAS THAT ARE TO REMAIN UNDISTURBED PER THE ATTACHED WEEKLY INSPECTION CHECKLIST.
14. FINISH GRADING AND PERMANENT EROSION CONTROL - FINISH GRADE AND PERMANENTLY SEED ALL PROPERTY PERIMETER AREAS.
15. UTILITIES - COORDINATE INSTALLATION OF ALL UTILITIES.
16. PAVEMENT - INSTALL STONE, BASE COURSES AND FINISHED GRADES FOR ENTRY DRIVE.
17. CLEANUP - CONTRACTOR SHALL SPOIL ALL EXCESS MATERIALS, RE-GRADE AND STABILIZE ALL AREAS DISTURBED BY UTILITY INSTALLATIONS AND RESEED.
18. FINAL LANDSCAPING - INSTALL FINAL LANDSCAPING.
19. THE GENERAL CONTRACTOR WILL KEEP WRITTEN DOCUMENTATION OF MAJOR EARTHMOVING ACTIVITIES USING THE ATTACHED SITE LOG INDICATING START AND STOP DATES FOR DEFINED AREAS OF THE SITE. NOTE THESE AREAS ON THE SITE DRAWINGS WHEN POSSIBLE.
20. PROVIDE FINAL STABILIZATION IMMEDIATELY AS AREAS ARE MADE AVAILABLE. FINAL STABILIZATION, 70 PERCENT COVERAGE OF TURF GRASS, IS SPECIFIED IN THE TEXT OF THE APPLICABLE PERMIT.
21. REMOVE TEMPORARY OR SEDIMENT CONTROL PRACTICES ONCE FINAL STABILIZATION/ VEGETATION HAS BEEN ESTABLISHED.
22. FILE THE APPROPRIATE NOTICE OF TERMINATION (NOT) WHEN THE ENTIRE PROJECT IS COMPLETE.
23. KEEP ALL SWPPP DOCUMENTS, INCLUDING INSPECTION CHECKLISTS, ON FILE FOR THREE YEARS FROM TERMINATION.
B3 CONSTRUCTION ENTRANCE - SEE STORMWATER POLLUTION PREVENTION PLANS AND SEE DETAIL ON SHEET C1.08.
B4 SEDIMENT CONTROL PLAN FOR SHEET FLOW AREAS - SEE STORMWATER POLLUTION PREVENTION PLANS AND THE VARIOUS DETAILS TO BE USED SUCH AS SILT FENCE, DIVERSION SWALES, TEMPORARY SEDIMENT BASINS, ETC., AS FOUND IN SHEETS C1.01 THROUGH C1.10.
B5 SEDIMENT CONTROL PLAN FOR CONCENTRATED FLOW AREAS - SEE STORMWATER POLLUTION PREVENTION PLANS AND THE VARIOUS DETAILS TO BE USED SUCH AS SILT FENCE, DIVERSION SWALES, TEMPORARY SEDIMENT BASINS, ETC., AS FOUND IN SHEETS C1.01 THROUGH C1.10.
B6 STORM SEWER INLET PROTECTION MEASURE LOCATIONS AND SPECS - SEE STORMWATER POLLUTION PREVENTION PLANS AND THE VARIOUS DETAILS TO BE USED SUCH AS DROP INLET PROTECTION, ROCK CHECK DAMS, COCONUT INLET MATS, ETC., AS FOUND IN SHEETS C1.01 THROUGH C1.10.
B7 RUNOFF CONTROL MEASURES - NOT APPLICABLE
B8 STORM WATER OUTLET PROTECTION SPECS - SEE STORMWATER POLLUTION PREVENTION PLANS AND THE VARIOUS DETAILS TO BE USED SUCH AS DIVERSION SWALES, DIVERSION BERMS, ROCK CHECK DAMS, TEMPORARY SEDIMENT BASINS, ETC., AS FOUND IN SHEETS C1.01 THROUGH C1.10. THE PERMANENT OUTLET IS TO BE EXTENDED INTO THE SITE AND BE USED DURING THE SWPPP PHASING OF THE SITE UNTIL THE FINAL STORM SEWER SYSTEM HAS BEEN INSTALLED.
B9 GRADE STABILIZATION STRUCTURE LOCATIONS AND SPECS - SEE STORMWATER POLLUTION PREVENTION PLANS AND THE VARIOUS DETAILS TO BE USED SUCH AS TEMPORARY SEED, PERMANENT SEED, SOD(ALTERANTE), EROSION BLANKET, ETC., AS FOUND IN SHEETS C1.01 THROUGH C1.10.
B10 STORMWATER QUALITY CONSTRUCTION DETAILS - SEE STORMWATER POLLUTION PREVENTION PLAN.
B11 TEMPORARY SURFACE STABILIZATION METHOD FOR EACH SEASON - SEE SEASONAL SOIL PROTECTION CHART
B12 PERMANENT SURFACE STABILIZATIONS - SEE SEASONAL SOIL PROTECTION CHART
B13 MATERIAL HANDLING AND SPILL PREVENTION PLAN - POTENTIAL POLLUTANTS FROM CONSTRUCTION ACTIVITY SUCH AS ASPHALT FROM PAVING; CONCRETE FROM CURBING, SIDEWALKS. A CONCRETE WASHOUT AREA HAS BEEN DESIGNATED OIL, GREASE, ANTIFREEZE, GASOLINE AND DIESEL FUEL FROM CONSTRUCTION EQUIPMENT. IF THERE IS A SPILL FROM ONE OF THESE, IMMEDIATE CLEANUP SHOULD OCCUR; SOIL EROSION; FERTILIZER AND PESTICIDES FROM LANDSCAPING AND TRASH SHOULD BE PROPERLY ATTENDED TO TO REDUCE THE CONTAMINANTS FROM ENTERING THE STORM SYSTEM. TRASH SHOULD BE CLEANED UP TO REDUCE CLOGGING OF STORM SYSTEMS AND REDUCE POTENTIAL BACTERIA AND/OR OTHER BIOLOGICAL AGENTS FROM ENTERING IN THE STORM SYSTEM.
SHALL MEET THE REQUIREMENTS OF IAC 2-6.1. FOLLOW MATERIAL SAFETY DATA SHEET (MSDS) GUIDELINES FOR CONTAMINANTS PRESENT ON SITE.
B14 MONITORING AND MAINTENANCE GUIDELINES FOR EACH STORMWATER QUALITY MEASURE - INSPECT ALL EROSION CONTROL MEASURES WEEKLY AND AFTER EACH STORM EVENT OR HEAVY USE. REPAIR/REPLACE ANY COMPROMISED OR FAILED MEASURE AS REQUIRED. MORE SPECIFIC GUIDELINES ARE INCLUDED ON INDIVIDUAL DETAILS.
B15 EROSION & SEDIMENT CONTROL SPECS - N/A
B17 SEDIMENT CONTROL ASSOCIATED WITH DEWATERING AND DIRECTIONAL BORING OPERATIONS - IN THE EVENT THAT DEWATERING IS REQUIRED ON SITE, PROVIDE SEDIMENT AND OIL CONTAINMENT WITH THE USE OF THE ULTRA DEWATERING BAG, PART #9724-O/S AS PROVIDED BY ULTRATECH INTERNATIONAL, INC. AND SUPPLIED BY D2 LAND & WATER RESOURCES. REFER TO MANUFACTURER SPECIFICATIONS FOR ALTERNATE SIZES OF BAGS IF NEEDED. ALTERNATE EQUAL MEASURES OF CONTAINMENT MAY BE APPROVED BY THE ENGINEER OR EROSION CONTACT PERSON IF ANOTHER PRODUCT OR METHOD OF CONTAINMENT IS DESIRED.

SECTION C - SWPPP - POST-CONSTRUCTION PHASE

C1 DESCRIPTION OF POLLUTANTS AND THEIR SOURCES ASSOCIATED WITH THE PROPOSED LAND USE - POTENTIAL POLLUTANTS FROM POST-CONSTRUCTION ACTIVITY SUCH AS SANDS AND SALTS FROM SNOW REMOVAL; OIL, GREASE, ANTIFREEZE, ETC. FROM VEHICLES INCLUDING HEAVY METAL FROM BRAKE PAD WEAR SHOULD BE PROPERLY ATTENDED TO TO REDUCE THE CONTAMINANTS FROM ENTERING THE STORM SYSTEM. TRASH SHOULD BE CLEANED UP TO REDUCE CLOGGING OF STORM SYSTEMS AND REDUCE POTENTIAL BACTERIA AND/OR OTHER BIOLOGICAL AGENTS FROM ENTERING IN THE STORM SYSTEM. EXCESS FERTILIZERS AND HERBICIDES SHOULD BE AVOIDED. CLEAN UP IMMEDIATELY IF ANY IS SPILLED.
C2 SEQUENCE DESCRIBING STORMWATER QUALITY MEASURE IMPLEMENTATION - WATER QUALITY IS PROVIDED BY THE TIME OF TRAVEL ACROSS THE PROPOSED STORMWATER MANAGEMENT AREA AT THE NORTH END OF THE COMBINED TRACTS AS SHOWN ON THE PLANS, AND VARIOUS CATCH BASINS AROUND THE SITE. ADDITIONAL WATER QUALITY MEASURES WILL BE IMPLEMENTED BY THE SITE OWNER AS PART OF THEIR SPILL PREVENTION, CONTROL, AND COUNTERMEASURE PLAN. DETAILS ARE PROVIDED IN SHEETS C1.08 THROUGH C.10.
C3 DESCRIPTION OF PROPOSED POST-CONSTRUCTION STORMWATER QUALITY MEASURES - WATER QUALITY IS PROVIDED BY THE TIME OF TRAVEL ACROSS THE PROPOSED STORMWATER MANAGEMENT AREA AT THE NORTH END OF THE COMBINED TRACTS AS SHOWN ON THE PLANS, AND VARIOUS CATCH BASINS AROUND THE SITE. ADDITIONAL WATER QUALITY MEASURES WILL BE IMPLEMENTED BY THE SITE OWNER AS PART OF THEIR SPILL PREVENTION, CONTROL, AND COUNTERMEASURE PLAN. DETAILS ARE PROVIDED IN SHEETS C1.08 THROUGH C.10.
C4 LOCATION, DIMENSIONS, SPECIFICATIONS, AND CONSTRUCTION DETAILS OF EACH STORM WATER QUALITY MEASURE - WATER QUALITY IS PROVIDED BY THE TIME OF TRAVEL ACROSS THE PROPOSED STORMWATER MANAGEMENT AREA AT THE NORTH END OF THE COMBINED TRACTS AS SHOWN ON THE PLANS, AND VARIOUS CATCH BASINS AROUND THE SITE. ADDITIONAL WATER QUALITY MEASURES WILL BE IMPLEMENTED BY THE SITE OWNER AS PART OF THEIR SPILL PREVENTION, CONTROL, AND COUNTERMEASURE PLAN. DETAILS ARE PROVIDED IN SHEETS C1.08 THROUGH C.10.
C5 DESCRIPTION OF MAINTENANCE GUIDELINES FOR POST CONSTRUCTION STORMWATER QUALITY MEASURES - MAINTENANCE GUIDELINES FOR THE STORMWATER MANAGEMENT AREA AND CATCH BASINS ARE INDICATED IN THE O&M MANUAL PROVIDED, AND AS STATED BELOW:.

CATCH BASINS:
CATCH BASIN/INLET CLEANING AND REPAIR HAS TRADITIONALLY BEEN PERFORMED TO RESPOND TO LOCALIZED FLOODING PROBLEMS IN STREETS. CATCH BASINS ARE INLETS AT THE CURB WITH A SMALL TRAP (USUALLY SIX INCHES TO ONE FOOT DEEP) BELOW THE SEWER PIPE. THESE DEVICES HELP TO CLEAN STORM WATER BECAUSE PARTICLES IN STREET RUNOFF SETTLE INTO THE TRAP BEFORE THE WATER ENTERS THE STORM SEWERS. CATCH BASINS REQUIRE REGULAR CLEANING OF THE SEDIMENT TRAP TO BE. THE INLETS DO NOT TRAP SEDIMENTS AND DON'T NEED CLEANING UNLESS THEY ARE PLUGGED. CLEANING FOR EITHER CATCH BASINS OR INLETS CAN BE DONE BY HAND (E.G., WITH A CLAMSHELL OR SHOVEL) OR WITH A VACUUM TRUCK.

CONVEYANCE STORM PIPES:
A GOOD RULE OF THUMB IS TO CONDUCT INSPECTION OF STORM DRAIN INLETS, DITCHES, CHANNELS, PONDS AND OTHER TREATMENT FACILITIES AT LEAST ONCE A YEAR, PRIOR TO THE BEGINNING OF THE RAINY SEASON. COMPLETE INSPECTIONS EARLY ENOUGH SO THAT REPAIRS CAN BE MADE DURING DRY WEATHER. CATCH BASINS SHOULD BE INSPECTED AT LEAST ONCE EVERY SIX MONTHS. SOME STORM WATER TREATMENT DEVICES, SUCH AS OIL/WATER SEPARATORS, MAY REQUIRE MORE FREQUENT INSPECTION. FOR THESE, CHECK THE MANUFACTURER'S SPECIFICATION OR OTHER DESIGN GUIDANCE HANDBOOKS. SEWER PIPES AND CULVERTS SHOULD BE INSPECTED EVERY THREE TO FIVE YEARS, OR IN RESPONSE TO A REPORTED PROBLEM. MOST AGENCIES INSPECT THEIR SEWER PIPES SIX INCHES OR LARGER WITH A TV CAMERA, AND PIPES 36 INCHES OR LARGER WITH A WALK-THROUGH INSPECTION. ALL OTHER PARTS OF THE SYSTEM ARE INSPECTED VISUALLY.

LOOK FOR EXCESSIVE SILT BUILD-UP, EROSION, UNUSUAL ALGAL GROWTH, CRACKED OR COLLAPSED PIPES, MISALIGNED JOINTS, AND OTHER SIGNS OF PROBLEMS SUCH AS A SHEEN ON THE WATER SURFACE, DISCOLORED WATER, OR AN UNPLEASANT ODOR. CHECK WITH PRODUCT MANUFACTURERS OR STORM WATER HANDBOOKS FOR ADVICE ON WHAT TO LOOK FOR WHEN INSPECTING MORE SOPHISTICATED TREATMENT DEVICES SUCH AS FLOW SPLITTERS AND DIVERTERS. WHEN A PROBLEM IS NOTED, TAKE STEPS TO CORRECT THE PROBLEM, OR ROUTE THIS INFORMATION IMMEDIATELY TO THE APPROPRIATE INDIVIDUAL(S) IN YOUR ORGANIZATION WHO CAN RESPOND. IF NEEDED, DEVELOP A GOOD RESPONSE PLAN TO ENSURE QUICK FOLLOW-UP IN THE FUTURE.

WET DETENTION BASIN:
ALSO CALLED STORMWATER PONDS, RETENTION PONDS OR WET EXTENDED DETENTION PONDS, THESE FACILITIES ARE BASINS THAT HAVE A PERMANENT POOL OF WATER THROUGHOUT THE YEAR. THE WET POND IS CONSTRUCTED TO STORE RUNOFF DURING AND AFTER STORMS. WET PONDS TREAT AND FILTER STORMWATER RUNOFF THROUGH SETTLING AND THROUGH NUTRIENT UPTAKE BY PLANTS AND OTHER AQUATIC ORGANISMS.

SECTION 1 - EMERGENCY RESPONSE NUMBERS

EMERGENCY RESPONSE TO ANY LIFE THREATENING PROBLEM	911
JOHNSON COUNTY FIRE DEPARTMENT	911
JOHNSON COUNTY POLICE DEPARTMENT	911
INDIANA DEPARTMENT OF NATURAL RESOURCES	812-477-8773
INDIANA DEPARTMENT OF ENVIRONMENTAL MANAGEMENT	317-233-7745
JOHNSON COUNTY SOIL AND WATER	317-342-5594

SECTION 2 MATERIAL HANDLING AND SPILL PREVENTION PLAN

IN ORDER TO MINIMIZE THE RELEASE OF POTENTIAL POLLUTANTS DURING CONSTRUCTION THE CONTRACTORS SHALL IMPLEMENT THIS MATERIAL HANDLING AND SPILL PREVENTION PLAN. THE CONTRACTOR SHALL REVIEW THIS PLAN WITH ALL SUBCONTRACTORS AND REQUIRE THAT THEY IMPLEMENT THE PLAN AS WELL.

1. CONSTRUCTION EQUIPMENT
A. FUELING, LUBRICATION AND FLUIDS: ALL OPERATIONS INVOLVING THE ADDITION OF FLUIDS TO EQUIPMENT SHOULD BE DONE IN ONE LOCATION, AS DESIGNATED BY THE CONSTRUCTION MANAGER, SO THAT SPILLS ARE LIMITED TO ONE LOCATION ON THE SITE, WHICH WILL FACILITATE THE CLEANUP OF SPILLS. IF AN ONSITE-FUELING TANK IS PLANNED TO BE ON SITE, IT SHALL BE DOUBLE WALLED AND STORED IN THIS DESIGNED AREA. THIS LOCATION IS AN AREA THAT WILL NOT ALLOW SPILLED FLUIDS TO MIGRATE INTO SUBSURFACE SOILS. IN THE EVENT OF A SPILL, THE FLUID SHALL IMMEDIATELY BE CLEANED UP BY REMOVING THE CONTAMINATED SOIL OR STONE, WHICH SHALL BE DISPOSED OF IN AN ACCEPTABLE MANNER. SPILLS ON HARD SURFACES SHALL BE SOAKED UP BY AN ACCEPTABLE MATERIAL SUCH AS OIL DRY AND THE ABSORBENT MATERIAL DISPOSED OF IN A PROPER MANNER. THE SPILL SHALL ALSO BE REPORTED IMMEDIATELY TO THE CONSTRUCTION MANAGER'S SUPERINTENDENT.
B. EQUIPMENT REPAIR, ESPECIALLY WHEN FLUIDS MUST BE REMOVED FROM THE EQUIPMENT OR THE POSSIBILITY OF FLUID SPILLS IS HIGH, SHOULD ALWAYS BE DONE OFFSITE AT A FACILITY THAT IS MORE SUITABLE THAN A CONSTRUCTION SITE TO HANDLE SPILLS. WHEN EQUIPMENT MUST BE REPAIRED ONSITE IT SHOULD BE MOVED TO THE MAINTENANCE AND FUELING AREA IF POSSIBLE. OTHERWISE, SUITABLE ON SITE CONTAINERS SHOULD BE PLACED UNDER THE EQUIPMENT DURING REPAIR TO CATCH ANY SPILLED FLUIDS AND THESE FLUIDS SHOULD BE DISPOSED OF IN A PROPER MANNER.
C. ALL REUSABLE FLUID CONTAINERS, SUCH AS GASOLINE CANS, SHALL BE INSPECTED FOR LEAKS EACH TIME THEY ARE USED. IF LEAKS ARE FOUND, THE FLUID SHALL BE REMOVED FROM THE CONTAINER IN A PROPER MANNER AND THE CONTAINER DISPOSED OF IN AN ACCEPTABLE MANNER. EMPTY DISPOSABLE CONTAINER, SUCH AS GREASE TUBES AND LUBRICATING OIL AND BRAKE FLUID CONTAINERS, AND THEIR PACKAGING, SHALL BE DISPOSED OF IN A PROPER MANNER AND SHALL NOT BE LEFT ON THE GROUND OR IN THE OPEN ON THE CONSTRUCTION SITE.
2. CONSTRUCTION MATERIALS AND THEIR PACKAGING
A. EROSION CONTROL MEASURE SHOWN ON THE SUBJECT PROJECT SHALL BE IMPLEMENTED PRIOR TO AND DURING CONSTRUCTION IN THE PROPER SEQUENCING TO MINIMIZE SOIL EROSION. EROSION CONTROLS SHALL BE INSPECTED AND MAINTAINED AS DESCRIBED ELSEWHERE ON THE PLANS. EXCESSIVE DUSTING OF SOIL ON THE SITE SHALL BE MINIMIZED BY REDUCING CONSTRUCTION TRAFFIC ACROSS BARE SOIL DURING DRY AND/OR WINDY WEATHER, AND BY APPLYING WATER OR OTHER ACCEPTABLE DUST CONTROL MEASURES TO THE SOIL. UPON COMPLETION OF CONSTRUCTION AND SUITABLE ESTABLISHMENT OF PERMANENT VEGETATION, TEMPORARY EROSION CONTROL MEASURES SUCH AS SILT FENCE, CHECK DAMS AND INLET PROTECTION DEVICES SHALL BE REMOVED IN A MANNER TO MINIMIZE ADDITIONAL LAND DISTURBANCE. ANY AREAS DISTURBED BY THESE OPERATIONS SHALL BE PROPERLY REVEGETATED.
B. LARGE WASTE MATERIALS CREATED BY CUTTING, SAWING, DRILLING, OR OTHER OPERATIONS SHALL BE PROPERLY DISPOSED OF IN SUITABLE WASTE CONTAINERS. THE SITE SHALL BE CHECKED AT THE END OF THE DAY, AS A MINIMUM, AND ALL WASTE MATERIALS, INCLUDING THOSE BLOWN ACROSS OR OFF THE SITE BY WIND SHALL BE PICKED UP AND DISPOSED OF IN SUITABLE CONTAINERS. WHERE POSSIBLE, OPERATIONS SUCH AS SAWING THAT CREATE SMALL PARTICLES SHOULD BE PERFORMED IN ONE SPOT IN AN AREA PROTECTED FROM WIND, AND WASTE PARTICLES COLLECTED AND DISPOSED OF FREQUENTLY TO MINIMIZE WIND DISPERSAL. PACKAGING USED TO TRANSPORT MATERIALS TO THE SITE FOR CONSTRUCTION OF THE FACILITY SHALL BE DISPOSED OF PROPERLY, WHETHER THE MATERIAL IS TAKEN OUT OF ITS PACKAGE AND INCORPORATED INTO THE PROJECT IMMEDIATELY OR STORED ONSITE FOR FUTURE USE. PACKAGED MATERIALS STORED ONSITE SHALL BE INSPECTED REGULARLY AND ANY LOOSE PACKAGING SHALL BE REPAIRED OR DISPOSED OF PROPERLY.
C. ALL DEWATERING OF ACTIVITIES SHALL BE DONE IN ACCORDANCE TO GOOD EROSION CONTROL PRACTICES. THESE PRACTICES SHOULD INCLUDE THE USE OF DIRT BAGS SUCH AS SILT FENCE INLET PROTECTION. THE USE OF THESE TYPES OF DEWATERING DEVICES WILL REMOVE LARGE QUANTITIES OF SILT, SEDIMENT, AND DIRT AND PREVENT THESE MATERIALS TO ENTER THE STORM SEWER SYSTEM.
D. IF THE USE OF LIME IS USED TO STABILIZE THE SOIL OF THE SITE THEN ALL CONSTRUCTION EQUIPMENT USED SHALL BE CLEANED OF ALL EXCESS MATERIAL WITH WATER IN THE MAINTENANCE AND REFUELING AREA AS SHOWN WITHIN THESE PLANS.
E. NUTRIENTS AND FERTILIZERS SHALL ONLY BE USED TO ESTABLISH RAPID VEGETATION. WHEN THESE PRODUCTS ARE UTILIZED, THE USER SHOULD PAY STRICT ATTENTION TO THE PRODUCTS RECOMMENDED USAGE.
3. CONCRETE WASTE WATER
A. ALL CONCRETE WASTEWATER SHALL BE DISPOSED OF IN THE DESIGNED AREA AS DIRECTED BY THE CONSTRUCTION MANAGER. THIS AREA IS TO BE A 3' DEEP, 10' SQUARE PIT AS DETAILED ON THE EROSION CONTROL PLAN. THIS AREA SHALL BE INSPECTED ON A DAILY BASIS AT A MINIMUM. WHEN THIS AREA BECOMES FULL, THE POLLUTANTS SHALL BE EXCAVATED, PLACED IN AN ACCEPTABLE CONTAINER AND DISPOSED OF IN PROPER MANNER, BY THE EXCAVATION CONTRACTOR.
4. PAINT PRODUCTS
A. ALL EXCESS PAINT AND THEIR RELATED PRODUCTS SHALL BE DISPOSED OF IN THE MANNER AT WHICH THE MANUFACTURER SUGGESTS. UNDER NO CIRCUMSTANCES WILL PAINT OR THEIR RELATED PRODUCTS BE CLEANED OR DISPOSED OF IN SOIL, SANITARY SEWERS, STORM SEWERS OR DETENTION BASINS. ANY VIOLATION OF THIS SHALL BE REPORTED TO THE JOB SUPERINTENDENT.
IN THE EVENT OF ACCIDENTAL CONTAMINATION ALL EFFORTS SHOULD BE MADE TO REMOVE CONTAMINANTS IN AN APPROPRIATE MANNER. THE FRANKLIN FIRE DEPARTMENT SHOULD BE CONTACTED IMMEDIATELY TO DETERMINE IF FURTHER MEASURES ARE NEEDED.

RULE 6. SPILLS OF OIL AND OTHER OBJECTIONABLE SUBSTANCES; REPORTING, CONTAINMENT AND CLEANUP

(REPEALED BY WATER POLLUTION CONTROL BOARD; FILED FEB 25, 1997, 1:00 P.M.: 20 IR 1734)

RULE 6.1. SPILLS; REPORTING, CONTAINMENT, AND RESPONSE

327 IAC 2-6.1-1 APPLICABILITY

AUTHORITY: IC 13-14-8-7
AFFECTED: IC 13-11-2; IC 13-18-1; IC 13-18-3; IC 13-18-8; IC 13-18-17
SEC. 1. THIS RULE APPLIES TO THE REPORTING AND CONTAINMENT OF, AND THE RESPONSE TO THOSE SPILLS OF HAZARDOUS SUBSTANCES, EXTREMELY HAZARDOUS SUBSTANCES, PETROLEUM, AND OBJECTIONABLE SUBSTANCES THAT ARE OF A QUANTITY, TYPE, DURATION AND IN A LOCATION AS TO DAMAGE THE WATERS OF THE STATE. NOTHING IN THIS RULE IS INTENDED TO AFFECT REPORTING OR CLEAN-UP REQUIREMENTS SET FORTH BY OTHER FEDERAL, STATE, OR LOCAL LAWS. (WATER POLLUTION CONTROL BOARD; 327 IAC 2-6.1-1; FILED FEB 25, 1997, 1:00 P.M.: 20 IR 1731; READOPTED FILED JAN 10, 2001, 3:23 P.M.: 24 IR 1518; READOPTED FILED NOV 21, 2007, 1:16 P.M.: 20071219-IR-327070553BFA)

327 IAC 2-6.1-2 SPECIAL AREAS

AUTHORITY: IC 13-14-8-7
AFFECTED: IC 13-11-2; IC 13-18-1; IC 13-18-3; IC 13-18-8; IC 13-18-17
SEC. 2. CERTAIN AREAS OF THE STATE ARE RECOGNIZED AS HAVING UNIQUE GEOLOGY. A LARGE SECTION OF THE MID-SOUTHERN PART OF THE STATE IS A KARST REGION. PORTIONS OF SAINT JOSEPH, ELKHART, KOSCIUSKO, AND LAGRANGE COUNTIES CONTAIN A SOLE SOURCE AQUIFER AS REFERENCED IN 42 U.S.C. 300H-3(E). THE WATERS OF THE STATE ARE PARTICULARLY VULNERABLE TO DAMAGE FROM SPILLS IN THESE AREAS, AND CARE SHOULD BE EXERCISED WHEN EVALUATING DAMAGE FROM SPILLS. INFORMATION ABOUT THESE AREAS CAN BE OBTAINED BY CALLING THE DEPARTMENT OF ENVIRONMENTAL MANAGEMENT, OFFICE OF LAND QUALITY, EMERGENCY RESPONSE SECTION: AREA CODE 1-888-233-7745 FOR IN-STATE CALLS (TOLL FREE), (317) 233-7745 FOR OUT-OF-STATE CALLS. (WATER POLLUTION CONTROL BOARD; 327 IAC 2-6.1-2; FILED FEB 25, 1997, 1:00 P.M.: 20 IR 1731; READOPTED FILED JAN 10, 2001, 3:23 P.M.: 24 IR 1518; READOPTED FILED NOV 21, 2007, 1:16 P.M.: 20071219-IR-327070553BFA; ERRATA FILED MAY 27, 2008, 2:06 P.M.: 20080625-IR-327080419ACA)

327 IAC 2-6.1-3 EXCLUSIONS

AUTHORITY: IC 13-14-8-7
AFFECTED: IC 13-11-2; IC 13-18-1; IC 13-18-3; IC 13-18-8; IC 13-18-17
SEC. 3. NOTWITHSTANDING ANY OTHER SECTION OF THIS RULE, THE REPORTING REQUIREMENT OF THIS RULE DOES NOT APPLY TO THE FOLLOWING OCCURRENCES:
(1) DISCHARGES OR EXCEEDANCES THAT ARE UNDER THE JURISDICTION OF AN APPLICABLE PERMIT WHEN THE SUBSTANCE IN QUESTION IS COVERED BY THE PERMIT AND DEATH OR ACUTE INJURY OR ILLNESS TO ANIMALS OR HUMANS DOES NOT OCCUR.
(2) LAWFUL APPLICATION OF MATERIALS, INCLUDING, BUT NOT LIMITED TO:
(A) COMMERCIAL OR NATURAL FERTILIZERS AND PESTICIDES ON OR TO LAND OR WATER; OR
(B) DUST SUPPRESSION MATERIALS.
(3) THE APPLICATION OF PETROLEUM NECESSARY FOR CONSTRUCTION THAT DOES NOT DAMAGE WATERS OF THE STATE.
(4) SPILLS OF LESS THAN ONE (1) POUND OR ONE (1) PINT.
(5) SPILLS OF INTEGRAL OPERATING FLUIDS, IN THE USE OF MOTOR VEHICLES OR OTHER EQUIPMENT, THE TOTAL VOLUME OF WHICH IS LESS THAN OR EQUAL TO FIFTY-FIVE (55) GALLONS AND WHICH DO NOT DAMAGE WATERS OF THE STATE.
(6) OIL SHEENS PRODUCED AS A RESULT OF THE NORMAL OPERATION OF PROPERLY FUNCTIONING WATERCRAFT.
(7) A RELEASE OF A SUBSTANCE INTEGRAL TO A SPILL RESPONSE ACTIVITY THAT HAS BEEN APPROVED AND AUTHORIZED BY A STATE OR FEDERAL ONSCENE COORDINATOR. (WATER POLLUTION CONTROL BOARD; 327 IAC 2-6.1-3; FILED FEB 25, 1997, 1:00 P.M.: 20 IR 1731; ERRATA FILED MAR 7, 1997, 2:25 P.M.: 20 IR 1738; READOPTED FILED JAN 10, 2001, 3:23 P.M.: 24 IR 1518; READOPTED FILED NOV 21, 2007, 1:16 P.M.: 20071219-IR-327070553BFA)

327 IAC 2-6.1-4 DEFINITIONS

AUTHORITY: IC 13-14-8-7
AFFECTED: IC 13-11-2; IC 13-18-1; IC 13-18-3; IC 13-18-8; IC 13-18-17; IC 14-8-2-7; IC 14-25-7-13; IC 14-25-7-15
SEC. 4. IN ADDITION TO THE DEFINITIONS CONTAINED IN IC 13-11-2-17(D), IC 13-11-2-35(A), IC 13-11-2-51, IC 13-11-2-158(A), IC 13-11-2-160, IC 13-11-2-260, IC 13-11-2-265, AND IN 327 IAC 1, THE FOLLOWING DEFINITIONS APPLY THROUGHOUT THIS RULE:
(1) "ANIMAL" MEANS ALL MAMMALS, BIRDS, REPTILES, AMPHIBIANS, FISH, CRUSTACEANS, AND MOLLUSKS.
(2) "AQUATIC LIFE" MEANS THOSE PLANTS AND MACROINVERTEBRATES THAT ARE DEPENDENT UPON AN AQUATIC ENVIRONMENT.
(3) "CONTAIN" MEANS TO TAKE SUCH IMMEDIATE ACTION AS NECESSARY TO DAM, BLOCK, RESTRAIN, OR OTHERWISE ACT TO MOST EFFECTIVELY PREVENT A SPILL FROM ENTERING WATERS OF THE STATE OR MINIMIZE DAMAGE TO THE WATERS OF THE STATE FROM A SPILL.
(4) "DAMAGE" MEANS THE ACTUAL OR IMMINENT ALTERATION OF THE WATERS OF THE STATE SO AS TO RENDER THE WATERS HARMFUL, DETRIMENTAL, OR INJURIOUS TO:
(A) PUBLIC HEALTH, SAFETY, OR WELFARE;
(B) DOMESTIC, COMMERCIAL, INDUSTRIAL, AGRICULTURAL, OR RECREATIONAL USES; OR
(C) ANIMALS OR AQUATIC LIFE.
(5) "DOWNSTREAM WATER USER" MEANS:
(A) A COMMUNITY PUBLIC WATER SUPPLY, AS IDENTIFIED BY THE DEPARTMENT OF NATURAL RESOURCES UNDER IC 14-25-7-13(D);
(B) A SIGNIFICANT WATER WITHDRAWAL FACILITY AS REGISTERED WITH THE DEPARTMENT OF NATURAL RESOURCES UNDER IC 14-25-7-15;
(C) USERS OF RECREATIONAL WATERS; OR
(D) ANY OTHER USER MADE KNOWN TO THE PERSON WHO HAS A SPILL.
(6) "EXTREMELY HAZARDOUS SUBSTANCE" MEANS A SUBSTANCE IDENTIFIED PURSUANT TO 42 U.S.C. 11002 AND 11004. (40 CFR 355 APPENDIX A.)
(7) "FACILITY" MEANS ALL LAND, BUILDINGS, EQUIPMENT, STRUCTURES, AND OTHER STATIONARY ITEMS THAT ARE LOCATED ON A SINGLE SITE OR ON CONTIGUOUS SITES AND THAT ARE OWNED OR OPERATED BY THE SAME PERSON OR BY ANY PERSON WHO CONTROLS, IS CONTROLLED BY, OR IS UNDER COMMON CONTROL WITH, SUCH PERSON.
(8) "FACILITY BOUNDARY" MEANS THE BOUNDARY OF A FACILITY OR AN EASEMENT OR RIGHT-OF-WAY.
(9) "HAZARDOUS SUBSTANCE" HAS THE MEANING SET FORTH IN 42 U.S.C. 9601(14).
(10) "MODE OF TRANSPORTATION" INCLUDES, BUT IS NOT LIMITED TO, CARRIAGE BY:
(A) RAIL AND MOTOR VEHICLES;
(B) AIRCRAFT;
(C) WATERCRAFT;
(D) PIPELINES; OR
(E) OTHER MEANS OF TRANSPORTATION;
IN COMMERCE. THIS DEFINITION EXCLUDES CARRIAGE WITHIN A FACILITY BY TRANSPORTATION EQUIPMENT OWNED, OPERATED, OR CONTROLLED BY THAT FACILITY.
(11) "OBJECTIONABLE SUBSTANCES" MEANS SUBSTANCES THAT ARE:
(A) OF A QUANTITY AND A TYPE; AND
(B) PRESENT FOR A DURATION AND IN A LOCATION;
SO AS TO DAMAGE WATERS OF THE STATE. THIS DEFINITION EXCLUDES HAZARDOUS SUBSTANCES, EXTREMELY HAZARDOUS SUBSTANCES, PETROLEUM, AND MIXTURES THEREOF.
(12) "ON-SCENE COORDINATOR" MEANS A STATE OR FEDERAL OFFICIAL DESIGNATED BY THE DEPARTMENT, THE UNITED STATES ENVIRONMENTAL PROTECTION AGENCY, OR THE UNITED STATES COAST GUARD TO DIRECT AND COORDINATE SPECIAL SPILL RESPONSE ACTIVITIES.
(13) "RECREATIONAL WATERS" MEANS ANY WATER USED FOR:
(A) BOATING, SWIMMING, FISHING, HUNTING, TRAPPING, OR WILDLIFE VIEWING; OR
(B) PUBLIC ACCESS AREAS THAT ARE OWNED BY THE DEPARTMENT OF NATURAL RESOURCES OR THE FEDERAL GOVERNMENT; AS LISTED BY THE DEPARTMENT.
(14) "REPORTABLE QUANTITY" MEANS THE AMOUNT OF A HAZARDOUS SUBSTANCE OR EXTREMELY HAZARDOUS SUBSTANCE THAT IS REQUIRED TO BE REPORTED UNDER FEDERAL LAW UNDER 42 U.S.C. 9602(A) AND (B) AND 42 U.S.C. 9603(A). (40 CFR 302.4 OR 40 CFR 355 APPENDIX A.) (15) "SPILL" MEANS ANY UNEXPECTED, UNINTENDED, ABNORMAL, OR UNAPPROVED DUMPING, LEAKAGE, DRAINAGE, SEEPAGE, DISCHARGE OR OTHER LOSS OF PETROLEUM, HAZARDOUS SUBSTANCES, EXTREMELY HAZARDOUS SUBSTANCES, OR OBJECTIONABLE SUBSTANCES. THE TERM DOES NOT INCLUDE RELEASES TO IMPERMEABLE SURFACES WHEN THE SUBSTANCE DOES NOT MIGRATE OFF THE SURFACE OR PENETRATE THE SURFACE AND ENTER THE SOIL.
(16) "SPILL RESPONSE", FOR PURPOSES OF THIS RULE, MEANS THE FOLLOWING:
(A) THE SPILL IS CONTAINED; AND
(B) FREE MATERIAL IS REMOVED OR NEUTRALIZED.
(17) "SPILL REPORT" MEANS AN ORAL REPORT THAT INCLUDES THE FOLLOWING INFORMATION ABOUT A SPILL, TO THE EXTENT THAT THE INFORMATION IS KNOWN AT THE TIME OF THE REPORT:
(A) THE NAME, ADDRESS, AND TELEPHONE NUMBER OF THE PERSON MAKING THE SPILL REPORT.
(B) THE NAME, ADDRESS, AND TELEPHONE NUMBER OF A CONTACT PERSON IF DIFFERENT FROM CLAUSE (A).
(C) THE LOCATION OF THE SPILL.
(D) THE TIME OF THE SPILL.
(E) THE IDENTIFICATION OF THE SUBSTANCE SPILLED.
(F) THE APPROXIMATE QUANTITY OF THE SUBSTANCE THAT HAS BEEN OR MAY FURTHER BE SPILLED.
(G) THE DURATION OF THE SPILL.
(H) THE SOURCE OF THE SPILL.
(I) NAME AND LOCATION OF THE WATERS DAMAGED.
(J) THE IDENTITY OF ANY RESPONSE ORGANIZATION RESPONDING TO THE SPILL.
(K) WHAT MEASURES HAVE BEEN OR WILL BE UNDERTAKEN TO PERFORM A SPILL RESPONSE.
(L) ANY OTHER INFORMATION THAT MAY BE SIGNIFICANT TO THE RESPONSE ACTION.
(18) "WATERS", AS DEFINED IN IC 13-11-2-265, MEANS THE ACCUMULATIONS OF WATER, SURFACE AND UNDERGROUND, NATURAL AND ARTIFICIAL, PUBLIC AND PRIVATE, OR PARTS THEREOF, THAT ARE WHOLLY OR PARTIALLY WITHIN, FLOW THROUGH, OR BORDER UPON THIS STATE. THE TERM DOES NOT INCLUDE ANY PRIVATE POND OR ANY OFF-STREAM POND, RESERVOIR, OR FACILITY BUILT FOR REDUCTION OR CONTROL OF POLLUTION OR COOLING OF WATER PRIOR TO DISCHARGE UNLESS THE DISCHARGE FROM THE POND, RESERVOIR, OR FACILITY CAUSES OR THREATENS TO CAUSE WATER POLLUTION. (WATER POLLUTION CONTROL BOARD; 327 IAC 2-6.1-4; FILED FEB 25, 1997, 1:00 P.M.: 20 IR 1731; ERRATA FILED MAR 7, 1997, 2:25 P.M.: 20 IR 1738; READOPTED FILED JAN 10, 2001, 3:23 P.M.: 24 IR 1518; READOPTED FILED NOV 21, 2007, 1:16 P.M.: 20071219-IR-327070553BFA)

327 IAC 2-6.1-5 REPORTABLE SPILLS; FACILITY

AUTHORITY: IC 13-14-8-7
AFFECTED: IC 13-11-2; IC 13-18-1; IC 13-18-3; IC 13-18-8; IC 13-18-17
SEC. 5. THE FOLLOWING SPILLS FROM A FACILITY MUST BE REPORTED:
(1) SPILLS THAT DAMAGE THE WATERS OF THE STATE SO AS TO CAUSE DEATH OR ACUTE INJURY OR ILLNESS TO HUMANS OR ANIMALS.
(2) SPILLS FROM A FACILITY THAT HAS BEEN NOTIFIED IN WRITING BY A WATER UTILITY THAT IT IS LOCATED IN A DELINEATED PUBLIC WATER SUPPLY WELLHEAD PROTECTION AREA AS APPROVED BY THE DEPARTMENT UNDER 327 IAC 8-4.1 THAT ARE:
(A) SPILLS OF HAZARDOUS SUBSTANCES OR EXTREMELY HAZARDOUS SUBSTANCES WHEN THE AMOUNT SPILLED EXCEEDS ONE HUNDRED (100) POUNDS OR THE REPORTABLE QUANTITY, WHICHEVER IS LESS;
(B) SPILLS OF PETROLEUM WHEN THE AMOUNT SPILLED EXCEEDS FIFTY-FIVE (55) GALLONS; OR
(C) SPILLS OF OBJECTIONABLE SUBSTANCES AS DEFINED IN SECTION 4(11) OF THIS RULE.
(3) SPILLS THAT DAMAGE WATERS OF THE STATE AND THAT:
(A) ARE LOCATED WITHIN FIFTY (50) FEET OF A KNOWN PRIVATE DRINKING WATER WELL LOCATED BEYOND THE FACILITY PROPERTY BOUNDARY; OR
(B) ARE LOCATED WITHIN ONE HUNDRED (100) YARDS OF:
(I) ANY HIGH QUALITY WATER DESIGNATED AS AN OUTSTANDING STATE RESOURCE PURSUANT TO 327 IAC 2-1-2(3), EXCLUDING LAKE MICHIGAN;
(II) ANY WATER DESIGNATED AS EXCEPTIONAL USE PURSUANT TO 327 IAC 2-13(A)(6) [SIC., 327 IAC 2-1-3(A)(6)] AND 327 IAC 2-1-11(B);
(III) ANY WATER DESIGNATED AS CAPABLE OF SUPPORTING A SALMONID FISHERY PURSUANT TO 327 IAC 2-1-6(C)(1), EXCEPT LAKE MICHIGAN; OR
(IV) ANY WATER THAT IS A FISH HATCHERY, FISH AND WILDLIFE AREA, NATURE PRESERVE, OR RECREATIONAL WATER OWNED BY THE DEPARTMENT OF NATURAL RESOURCES OR THE FEDERAL GOVERNMENT.
(4) FOR ANY SPILL WHICH DOES NOT MEET THE CRITERIA IN SUBDIVISIONS (1) THROUGH (3), THE FOLLOWING MUST BE REPORTED:
(A) SPILLS TO SURFACE WATERS:
(I) SPILLS OF HAZARDOUS SUBSTANCES OR EXTREMELY HAZARDOUS SUBSTANCES WHEN THE AMOUNT SPILLED EXCEEDS ONE HUNDRED (100) POUNDS OR THE REPORTABLE QUANTITY, WHICHEVER IS LESS;
(II) SPILLS OF PETROLEUM OF SUCH QUANTITY AS TO CAUSE A SHEEN UPON THE WATERS; OR
(III) SPILLS OF OBJECTIONABLE SUBSTANCES AS DEFINED IN SECTION 4(11) OF THIS RULE.
(B) SPILLS TO SOIL BEYOND THE FACILITY BOUNDARY:
(I) SPILLS OF HAZARDOUS SUBSTANCES OR EXTREMELY HAZARDOUS SUBSTANCES WHEN THE AMOUNT SPILLED EXCEEDS ONE HUNDRED (100) POUNDS OR THE REPORTABLE QUANTITY, WHICHEVER IS LESS;
(II) SPILLS OF PETROLEUM WHEN THE AMOUNT SPILLED EXCEEDS FIFTY-FIVE (55) GALLONS; OR
(III) SPILLS OF OBJECTIONABLE SUBSTANCES AS DEFINED IN SECTION 4(11) OF THIS RULE.
(C) SPILLS TO SOIL WITHIN THE FACILITY BOUNDARY:
(I) SPILLS OF HAZARDOUS SUBSTANCES OR EXTREMELY HAZARDOUS SUBSTANCES WHEN THE AMOUNT SPILLED EXCEEDS THE REPORTABLE QUANTITY;
(II) SPILLS OF PETROLEUM WHEN THE SPILLED AMOUNT EXCEEDS ONE THOUSAND (1,000) GALLONS; OR
(III) SPILLS OF OBJECTIONABLE SUBSTANCES AS DEFINED IN SECTION 4(11) OF THIS RULE.
(5) ANY SPILL FOR WHICH A SPILL RESPONSE HAS NOT BEEN DONE.
(WATER POLLUTION CONTROL BOARD; 327 IAC 2-6.1-5; FILED FEB 25, 1997, 1:00 P.M.: 20 IR 1732; ERRATA FILED MAR 7, 1997, 2:25 P.M.: 20 IR 1738; READOPTED FILED JAN 10, 2001, 3:23 P.M.: 24 IR 1518; READOPTED FILED NOV 21, 2007, 1:16 P.M.: 20071219-IR-327070553BFA)

327 IAC 2-6.1-6 REPORTABLE SPILLS; TRANSPORTATION

AUTHORITY: IC 13-14-8-7
AFFECTED: IC 13-11-2; IC 13-18-1; IC 13-18-3; IC 13-18-8; IC 13-18-17
SEC. 6. THE FOLLOWING SPILLS FROM A MODE OF TRANSPORTATION MUST BE REPORTED:
(1) SPILLS THAT DAMAGE THE WATERS OF THE STATE SO AS TO CAUSE DEATH OR ACUTE INJURY OR ILLNESS TO HUMANS OR ANIMALS.
(2) SPILLS THAT DAMAGE SURFACE WATERS.
(3) SPILLS TO SOIL:
(A) SPILLS OF HAZARDOUS SUBSTANCES OR EXTREMELY HAZARDOUS SUBSTANCES WHEN THE AMOUNT SPILLED EXCEEDS ONE HUNDRED (100) POUNDS OR THE REPORTABLE QUANTITY, WHICHEVER IS LESS;
(B) SPILLS OF PETROLEUM WHEN THE AMOUNT SPILLED EXCEEDS FIFTY-FIVE (55) GALLONS; OR
(C) SPILLS OF OBJECTIONABLE SUBSTANCES AS DEFINED IN SECTION 4(11) OF THIS RULE.
(4) ANY SPILL FOR WHICH A SPILL RESPONSE HAS NOT BEEN DONE. (WATER POLLUTION CONTROL BOARD; 327 IAC 2-6.1-6; FILED FEB 25, 1997, 1:00 P.M.: 20 IR 1733; READOPTED FILED JAN 10, 2001, 3:23 P.M.: 24 IR 1518; READOPTED FILED NOV 21, 2007, 1:16 P.M.: 20071219-IR-327070553BFA)

327 IAC 2-6.1-7 REPORTABLE SPILLS; RESPONSIBILITIES

AUTHORITY: IC 13-14-8-7
AFFECTED: IC 13-11-2; IC 13-18-1; IC 13-18-3; IC 13-18-8; IC 13-18-17
SEC. 7. ANY PERSON WHO OPERATES, CONTROLS, OR MAINTAINS ANY MODE OF TRANSPORTATION OR FACILITY FROM WHICH A SPILL OCCURS SHALL, UPON DISCOVERY OF A REPORTABLE SPILL TO THE SOIL OR SURFACE WATERS OF THE STATE, DO THE FOLLOWING:
(1) CONTAIN THE SPILL, IF POSSIBLE, TO PREVENT ADDITIONAL SPILLED MATERIAL FROM ENTERING THE WATERS OF THE STATE.
(2) UNDERTAKE OR CAUSE OTHERS TO UNDERTAKE ACTIVITIES NEEDED TO ACCOMPLISH A SPILL RESPONSE.
(3) AS SOON AS POSSIBLE, BUT WITHIN TWO (2) HOURS OF DISCOVERY, COMMUNICATE A SPILL REPORT TO THE DEPARTMENT OF ENVIRONMENTAL MANAGEMENT, OFFICE OF LAND QUALITY, EMERGENCY RESPONSE SECTION: AREA CODE 1-888-233-7745 FOR IN-STATE CALLS (TOLL FREE), (317) 233-7745 FOR OUT-OF-STATE CALLS. IF NEW OR UPDATED SPILL REPORT INFORMATION BECOMES KNOWN THAT INDICATES A SIGNIFICANT INCREASE IN THE LIKELIHOOD OF DAMAGE TO THE WATERS OF THE STATE, THE RESPONSIBLE PARTY SHALL NOTIFY THE DEPARTMENT AS SOON AS POSSIBLE BUT WITHIN TWO (2) HOURS OF THE TIME THE NEW OR UPDATED INFORMATION BECOMES KNOWN.
(4) SUBMIT TO THE INDIANA DEPARTMENT OF ENVIRONMENTAL MANAGEMENT, OFFICE OF LAND QUALITY, EMERGENCY RESPONSE SECTION (MC 66-30), 2525 N. SHADELAND AVE., SUITE 100, INDIANAPOLIS, IN 46219-1787, A WRITTEN COPY OF THE SPILL REPORT IF REQUESTED IN WRITING BY THE DEPARTMENT.
(5) EXCEPT FROM MODES OF TRANSPORTATION OTHER THAN PIPELINES, EXERCISE DUE DILIGENCE AND DOCUMENT ATTEMPTS TO NOTIFY THE FOLLOWING:
(A) FOR SPILLS TO SURFACE WATER THAT CAUSE DAMAGE, THE NEAREST AFFECTED DOWNSTREAM WATER USER LOCATED WITHIN TEN (10) MILES OF THE SPILL AND IN THE STATE OF INDIANA; AND
(B) FOR SPILLS TO SOIL OUTSIDE THE FACILITY BOUNDARY, THE AFFECTED PROPERTY OWNER OR OWNERS, OPERATOR OR OPERATORS, OR OCCUPANT OR OCCUPANTS. (WATER POLLUTION CONTROL BOARD; 327 IAC 2-6.1-7; FILED FEB 25, 1997, 1:00 P.M.: 20 IR 1733; READOPTED FILED JAN 10, 2001, 3:23 P.M.: 24 IR 1518; ERRATA FILED FEB 6, 2006, 11:15 A.M.: 29 IR 1936; ERRATA FILED OCT 20, 2006, 10:08 A.M.: 20061101-IR-327060497ACA; READOPTED FILED NOV 21, 2007, 1:16 P.M.: 20071219-IR-327070553BFA; ERRATA FILED MAY 27, 2008, 2:06 P.M.: 20080625-IR-327080419ACA)

327 IAC 2-6.1-8 EMERGENCY SPILL RESPONSE ACTIONS

AUTHORITY: IC 13-14-8-7
AFFECTED: IC 13-11-2; IC 13-18-1; IC 13-18-3; IC 13-18-8; IC 13-18-17
SEC. 8. NOTWITHSTANDING ANY OTHER SECTION OF THIS RULE, EMERGENCY SPILL RESPONSE ACTIONS TAKE PRECEDENCE OVER REPORTING REQUIREMENTS, AND WHEN EMERGENCY SPILL RESPONSE ACTIVITIES RENDER SPILL REPORTING INCONSISTENT WITH EFFECTIVE RESPONSE ACTIVITIES, COMMUNICATION OF THE SPILL REPORT TO THE INDIANA DEPARTMENT OF ENVIRONMENTAL MANAGEMENT MAY BE DELAYED. IN SITUATIONS WHERE THE SPILL REPORT IS DELAYED, THE BURDEN OF PROVING THE NEED FOR THE DELAY SHALL BE UPON THE RESPONSIBLE PERSON. (WATER POLLUTION CONTROL BOARD; 327 IAC 2-6.1-8; FILED FEB 25, 1997, 1:00 P.M.: 20 IR 1734; READOPTED FILED JAN 10, 2001, 3:23 P.M.: 24 IR 1518; READOPTED FILED NOV 21, 2007, 1:16 P.M.: 20071219-IR-327070553BFA)

327 IAC 2-6.1-9 COMPLIANCE CONFIRMATION

AUTHORITY: IC 13-14-8-7
AFFECTED: IC 13-11-2; IC 13-18-1; IC 13-18-3; IC 13-18-8; IC 13-18-17
SEC. 9. WHEN SPILL REPORTING AND RESPONSE, AS PROVIDED FOR IN THIS RULE, HAS OCCURRED, THE DEPARTMENT SHALL, UPON REQUEST, ISSUE A LETTER CONFIRMING COMPLIANCE WITH THIS RULE AND STATING THAT NO FURTHER ACTION IS REQUIRED UNDER THIS RULE. (WATER POLLUTION CONTROL BOARD; 327 IAC 2-6.1-9; FILED FEB 25, 1997, 1:00 P.M.: 20 IR 1734; READOPTED FILED JAN 10, 2001, 3:23 P.M.: 24 IR 1518; READOPTED FILED NOV 21, 2007, 1:16 P.M.: 20071219-IR-327070553BFA)

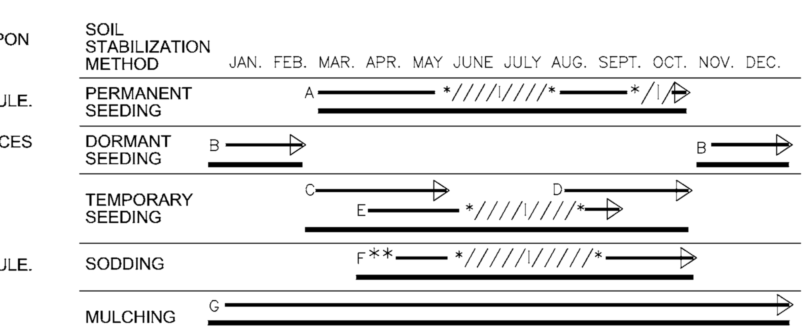

A = KENTUCKY BLUEGRASS* 40 LBS/ACRE; CREEPING RED FESCUE 40 LBS/ACRE; PLUS 2 TONS STRAW MULCH/ACRE, OR ADD ANNUAL RYEGRASS 20 LBS/ACRE.
B = KENTUCKY BLUEGRASS* 60 LBS/ACRE; CREEPING RED FESCUE 60 LBS/ACRE; PLUS 2 TONS STRAW MULCH/ACRE, OR ADD ANNUAL RYEGRASS 30 LBS/ACRE.
C = SPRING OATS 3 BUSHEL/ACRE.
D = WHEAT OR RYE 2 BUSHEL/ACRE.
E = ANNUAL RYEGRASS 40 LBS/ACRE.
F = SOD (BLEND 3 IMPROVED VARIETIES).
G = STRAW MULCH 2 TONS/ACRE.
/I/ IRRIGATION NEEDED DURING JUNE, JULY, AND/OR SEPTEMBER.
** IRRIGATION NEEDED FOR 2 TO 3 WEEKS AFTER APPLYING SOD.
*KENTUCKY BLUEGRASS BLEND OF 3 IMPROVED VARIETIES.

SEASONAL SOIL PROTECTION CHART

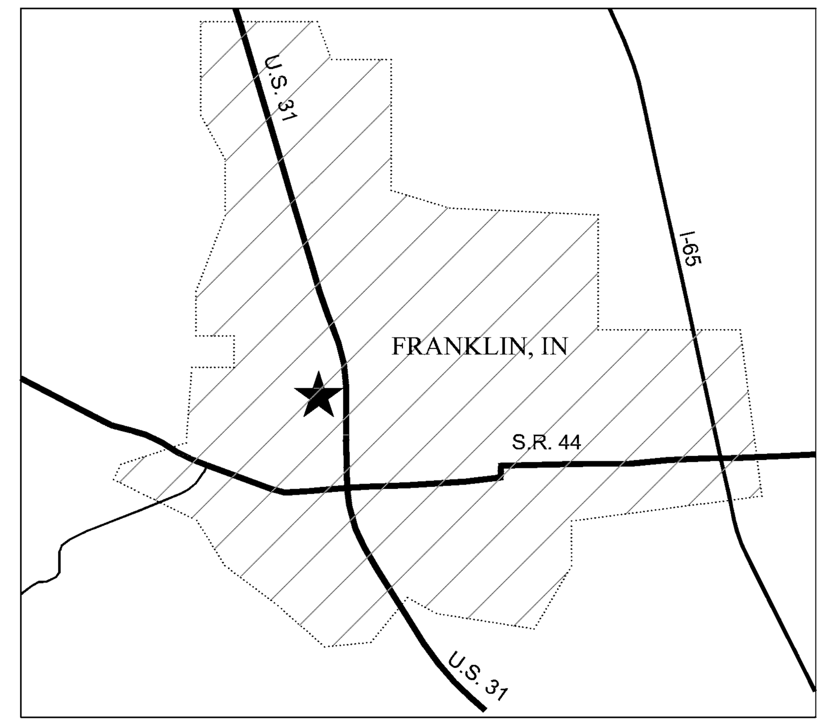

★ PROJECT LOCATION
AREA MAP

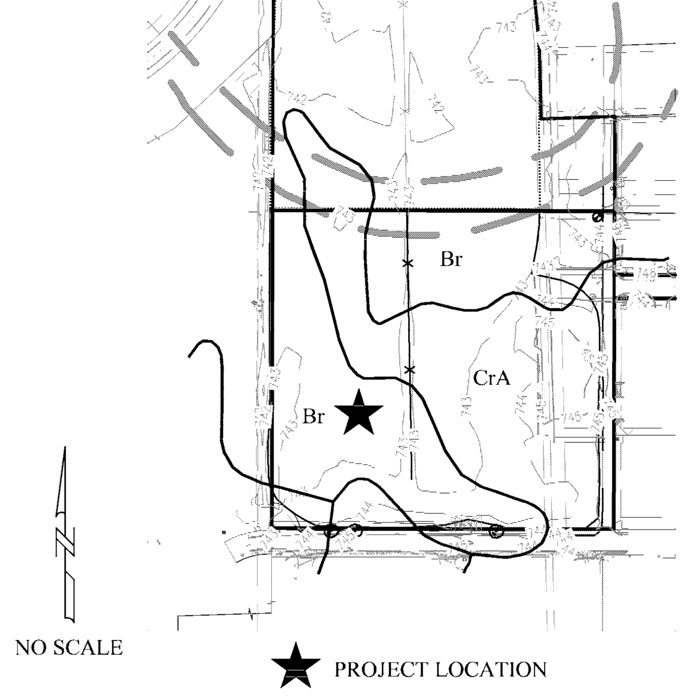

NO SCALE

★ PROJECT LOCATION
SOILS MAP

SOILS TYPE LEGEND

Br BROOKSTON SILTY CLAY LOAM
THE MAIN SOIL FEATURES THAT ADVERSELY AFFECT ENGINEERING USES OF THIS SOIL ARE A SEASONAL HIGH WATER TABLE, HIGH POTENTIAL FROST ACTION, MODERATE SHRINK-SWELL POTENTIAL, AND MODERATE PERMEABILITY. THIS SOIL HAS SEVERE LIMITATIONS FOR BUILDING SITES. THE SITES NEED TO BE ARTIFICIALLY DRAINED AND PROTECTED FROM FLOODING. DWELLINGS AND SMALL BUILDINGS WITH BASEMENTS SHOULD NOT BE CONSTRUCTED ON THIS SOIL. USING PROPERLY DESIGNED FOUNDATIONS AND FOOTINGS HELPS TO PREVENT STRUCTURAL DAMAGE FROM FROST ACTION AND SHRINKING AND SWELLING OF THE SOIL. THIS SOIL HAS SEVERE LIMITATIONS FOR LOCAL ROADS AND STREETS BECAUSE OF SEASONAL HIGH WATER TABLE AND HIGH POTENTIAL FROST ACTION. INSTALLATION OF DRAINAGE DITCHES ALONG ROADS HELPS TO LOWER THE WATER TABLE AND PREVENT DAMAGE FROM FROST ACTION. THE BASE MATERIAL FOR ROADS AND STREETS SHOULD BE REPLACED OR STRENGTHENED WITH SUITABLE MATERIAL.

CrA CROSBY SILT LOAM
0 TO 2 PERCENT SLOPES. THE MAIN SOIL FEATURES THAT ADVERSELY AFFECT THE ENGINEERING USES OF THIS SOIL ARE A SEASONAL HIGH WATER TABLE, MODERATE SHRINK-SWELL POTENTIAL, HIGH POTENTIAL FROST ACTION, AND SLOW PERMEABILITY. THIS SOIL HAS SOME SEVERE LIMITATIONS FOR BUILDING SITES. THE SITES NEED TO BE ARTIFICIALLY DRAINED TO PREVENT WETNESS FROM BECOMING A PROBLEM. DWELLINGS AND SMALL BUILDINGS WITH BASEMENTS SHOULD NOT BE CONSTRUCTED ON THIS SOIL. USING PROPERLY DRAINED FOUNDATIONS AND FOOTINGS HELPS TO PREVENT STRUCTURAL DAMAGE FROM LOW STRENGTH AND SHRINKING AND SWELLING OF THE SOIL. THIS SOIL HAS SEVER LIMITATIONS FOR LOCAL ROADS AND STREETS. THE BASE MATERIAL FOR ROADS NEEDS TO BE STRENGTHENED OR REPLACED WITH SUITABLE MATERIAL.

10505 N. College Avenue
Indianapolis, Indiana 46280
weihe.net
317 | 846 - 6611
800 | 452 - 6408
317 | 843 - 0546 *fax*
ALLAN H. WEIHE, P.E., L.S. - FOUNDER
WEIHE ENGINEERS
Land Surveying | Civil Engineering
Landscape Architecture

REVISIONS AND ISSUES	DATE	BY
SUBMITTED FOR INITIAL REVIEW	02.12.2015	BJS

PROJECT NO.: W14.0460
DWG NAME: w14046-C103 swppp spec.dwg
DESIGNED BY: RLW/RAM
DRAWN BY: RLW/RAM
CHECKED BY: JKS
DATE: 02.12.2015

JAMES K. SHINNEMAN REGISTERED No. 10200392 STATE OF INDIANA PROFESSIONAL ENGINEER
APPROVAL PENDING NOT FOR CONSTRUCTION

JAMES K. SHINNEMAN P.E. 10200392

PREPARED FOR:
KROGER STORE J-979
KROGER MARKETPLACE - MALLORY PARKWAY AND U.S. 31
SWPPP SPECIFICATIONS
Part of the NE/4 of Section 15, Township 12 North, Range 4 East, Franklin Township, Johnson County, Indiana

SHEET NO.
C1.07
PROJECT NO.
W14.0460

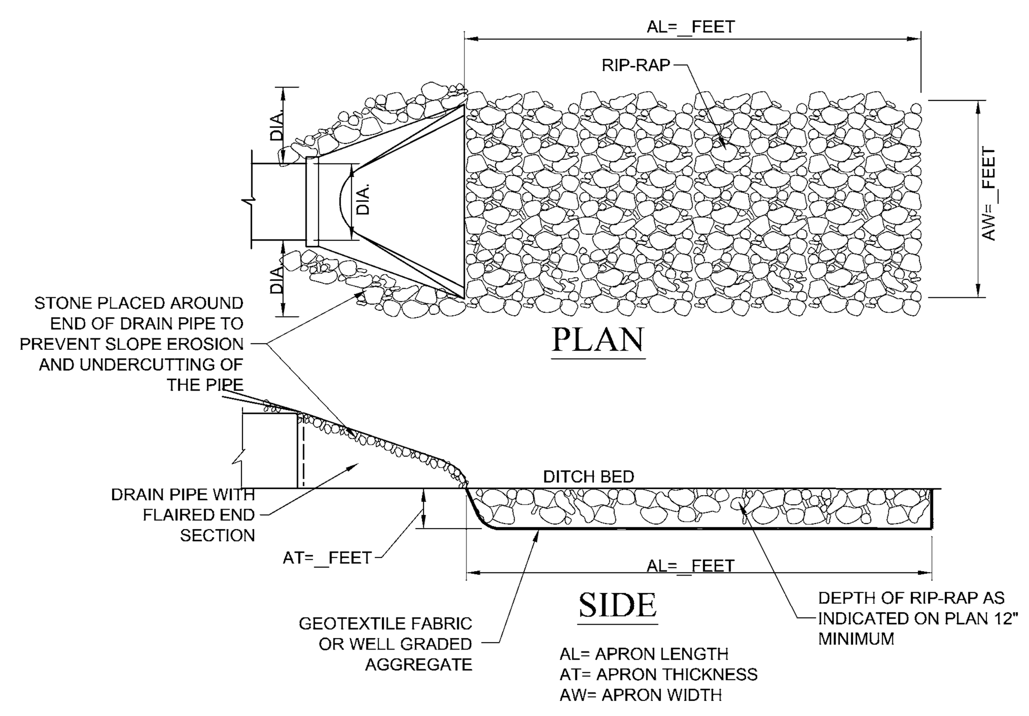

TABLE 1. SIZING FOR FLOW DISSIPATERS AT CULVERT PIPE OUTLETS

PIPE SIZE (D50)	AVERAGE RIPRAP DIAMETER	APRON WIDTH	APRON LENGTH
8 IN.	3 IN.	2 TO 3 FEET	5 TO 7 FEET
12 IN.	5 IN.	3 TO 4 FEET	6 TO 12 FEET
18 IN.	8 IN.	4 TO 6 FEET	8 TO 18 FEET
24 IN.	10 IN.	6 TO 8 FEET	12 TO 22 FEET
30 IN.	12 IN.	8 TO 10 FEET	14 TO 28 FEET
36 IN.	14 IN.	10 TO 12 FEET	16 TO 32 FEET

AT=1.5' X D50 15" OR LESS, 1.2' X D50 15" OR LARGER STONE.

ENERGY DISSIPATER (OUTLET PROTECTION)

1. DIVERT SURFACE WATER RUNOFF AROUND THE STRUCTURE DURING CONSTRUCTION SO THAT THE SITE CAN BE PROPERLY DEWATERED FOR FOUNDATION PREPARATION.
2. EXCAVATE FOUNDATION AND APRON AREA SUBGRADES BELOW DESIGN ELEVATION TO ALLOW FOR THICKNESS OF THE FILTER MEDIUM AND RIPRAP.
3. COMPACT ANY FILL USED IN SUBGRADE PREPARATION TO THE DENSITY OF SURROUNDING UNDISTURBED SOIL MATERIAL.
4. SMOOTH SUBGRADE ENOUGH TO PROTECT GEOTEXTILE FABRIC FROM TEARING.
5. PLACE GEOTEXTILE FABRIC OR AGGREGATE BEDDING MATERIAL (FOR STABILIZATION AND FILTRATION) ON THE COMPACTED AND SMOOTHED FOUNDATION.
6. INSTALL RIPRAP TO THE LINES AND ELEVATIONS SHOWN IN THE CONSTRUCTION PLANS. BLEND RIPRAP SMOOTHLY TO SURROUNDING GRADE. IF THE CHANNEL IS WELL DEFINED, EXTEND THE APRON ACROSS THE CHANNEL BOTTOM AND UP THE CHANNEL BANKS TO AN ELEVATION OF SIX INCHES ABOVE THE MAXIMUM TAILWATER DEPTH OR TO THE TOP OF THE BANK, WHICHEVER IS LESS.
7. IF GEOTEXTILE FABRIC TEARS WHEN PLACING RIPRAP, REPAIR IMMEDIATELY BY LAYING AND STAPLING A PIECE OF FABRIC OVER DAMAGED AREA, OVERLAPPING THE UNDAMAGED AREAS BY AT LEAST 12 INCHES.
8. CONSTRUCT A SMALL PLUNGE POOL WITHIN THE OUTLET APRON. (RIPRAP APRONS MUST BE LEVEL WITH OR SLIGHTLY LOWER THAN THE RECEIVING CHANNEL AND SHOULD NOT PRODUCE AN OVERFALL OR RESTRICT FLOW OF THE WATER CONVEYANCE STRUCTURE.)

MAINTENANCE

_ INSPECT WITHIN 24 HOURS OF A RAIN EVENT AND AT LEAST ONCE EVERY SEVEN CALENDAR DAYS.
_ INSPECT FOR STONE DISPLACEMENT; REPLACE STONES ENSURING PLACEMENT AT FINISHED GRADE.
_ CHECK FOR EROSION OR SCOURING AROUND SIDES OF THE APRON; REPAIR IMMEDIATELY.
_ CHECK FOR PIPING OR UNDERCUTTING; REPAIR IMMEDIATELY.

REFERENCE IN CHAPTER 7 PAGE 121 IN THE INDIANA STORM WATER QUALITY MANUAL

OUTLET EROSION CONTROL PROTECTION

(NO SCALE)

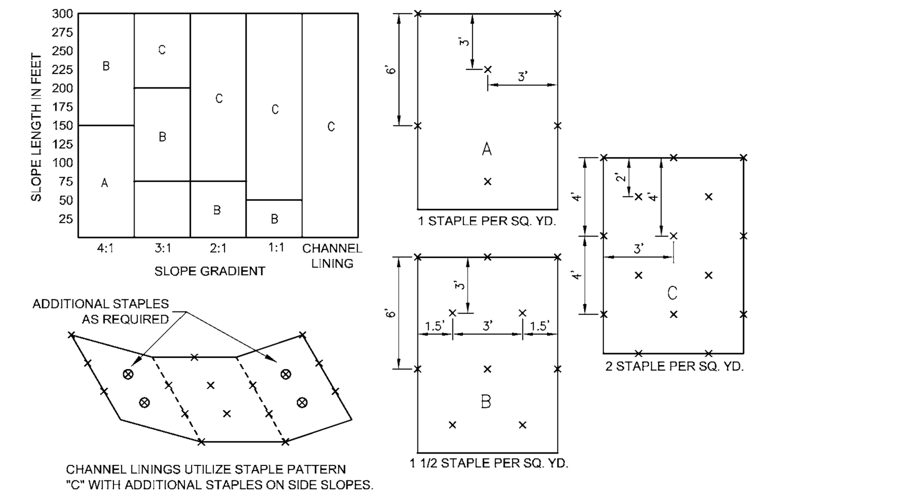

EROSION CONTROL BLANKET STAPLE PATTERN

(NO SCALE)

GENERAL STAPLE RECOMMENDATIONS

STAPLE PATTERNS APPLY TO ALL NORTH AMERICAN GREEN EROSION CONTROL BLANKETS.
STAPLE PATTERNS MAY VARY DEPENDING UPON SOIL TYPE AND AVERAGE ANNUAL RAINFALL.

AT SLOPE LENGTHS GREATER THAN 300 FEET OR WHERE DRAINAGE OVER LARGE AREAS IS DIRECTED ONTO THE BLANKETS, STAPLE PATTERN "C" SHOULD BE UTILIZED.

CHANNEL LININGS REQUIRED A 2.0' MINIMUM OVERLAP AT LONGITUDINAL JOINTS. SIDESLOPES SHALL REQUIRE A 6" MINIMUM OVERLAP. WHERE OVERLAPS OCCUR, THE UPSTREAM BLANKET SHALL OVERLAP THE DOWNSTREAM.

IF OTHER THAN NORTH AMERICAN GREEN EROSION CONTROL BLANKETS ARE INSTALLED FOLLOW THE INSTALLATION DIRECTIONS RECOMMENDED BY THAT PRODUCTS COMPANY.

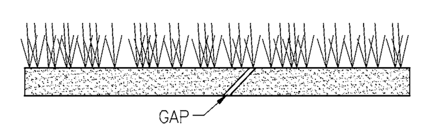

CROSS SECTION

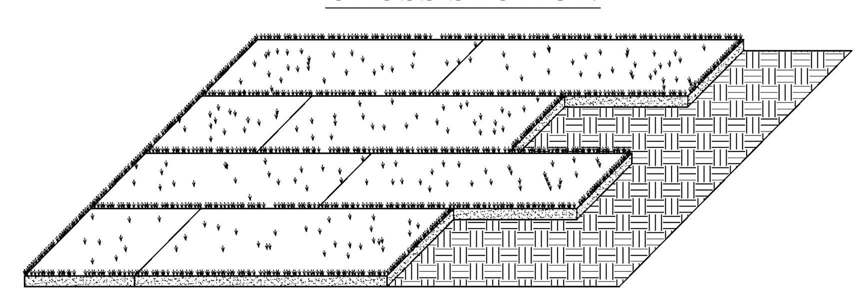

PERSPECTIVE VIEW

SPECIFICATIONS

SITE PREPARATION

_ GRADE THE SITE TO ACHIEVE POSITIVE DRAINAGE.
_ PREPARE A SMOOTH, FIRM SOIL SURFACE AND APPLY SOIL AMENDMENTS. IRRIGATION IRRIGATE AS NEEDED TO ENSURE ROOTING OF SOD.

MATERIALS

_ SOIL AMENDMENTS - SELECT MATERIALS AND RATES AS DETERMINED BY A SOIL TEST (CONTACT YOUR COUNTY SOIL AND WATER CONSERVATION DISTRICT OR COOPERATIVE EXTENSION OFFICE FOR ASSISTANCE AND SOIL INFORMATION, INCLUDING AVAILABLE SOIL TESTING SERVICES.) OR 400 TO 600 POUNDS OF 12-12-12 ANALYSIS FERTILIZER, OR EQUIVALENT.
_ SOD - SELECT A HIGH QUALITY, HEALTHY, VIGOROUS VARIETY WELL ADAPTED TO THE REGION AND COMPATIBLE WITH THE INTENDED USE.

INSTALLATION

SOD SHOULD NOT BE INSTALLED DURING HOT WEATHER, ON DRY SOIL, FROZEN SOIL, COMPACTED CLAY, LOOSE SAND OR GRAVELLY SUBSTRATE SOILS, AGGREGATE, OR PESTICIDE TREATED SOIL. THE IDEAL TIME TO LAY SOD IS MAY 1 TO JUNE 1 OR SEPTEMBER 1 TO SEPTEMBER 30, ALTHOUGH IT CAN BE INSTALLED AS EARLY AS MARCH 15 IF AVAILABLE OR JUNE 1 TO SEPTEMBER 1 IF IRRIGATED.

SITE PREPARATION

1. APPLY TOPSOIL IF EXISTING SOIL CONDITIONS ARE UNSUITABLE FOR ESTABLISHING VEGETATION.
2. GRADE THE SITE TO ACHIEVE POSITIVE DRAINAGE AND CREATE A SMOOTH, FIRM SOIL SURFACE.
3. WHERE APPLICABLE, USE A CHISEL PLOW, DISK, HARROW, OR RAKE TO BREAK UP COMPACTED SOILS AND CREATE A FAVORABLE ROOTING DEPTH OF SIX TO EIGHT INCHES.

SOD BED PREPARATION

1. TEST SOIL TO DETERMINE PH AND NUTRIENT LEVELS.
2. IF SOIL PH IS TOO ACIDIC FOR THE GRASS SOD TO BE INSTALLED, APPLY LIME ACCORDING TO SOIL TEST RESULTS OR AT THE RATE RECOMMENDED BY THE SOD SUPPLIER.
3. APPLY FERTILIZER AS RECOMMENDED BY THE SOIL TEST. IF TESTING WAS NOT DONE, APPLY 400 TO 600 POUNDS PER ACRE OF 12-12-12 ANALYSIS FERTILIZER, OR EQUIVALENT.
4. WORK THE SOIL AMENDMENTS INTO THE UPPER TWO TO FOUR INCHES OF SOIL WITH A DISK OR RAKE OPERATED ACROSS THE SLOPE.
5. RAKE OR HARROW THE AREA TO ACHIEVE A SMOOTH FINAL GRADE AND THEN ROLL OR CULTIPACK THE SOIL SURFACE TO CREATE A FIRM SURFACE ON WHICH TO LAY THE SOD.

LAYING THE SOD

1. INSTALL SOD WITHIN THIRTY-SIX HOURS OF ITS CUTTING.
2. STORE THE SOD IN A SHADED LOCATION DURING INSTALLATION.
3. IMMEDIATELY BEFORE LAYING THE SOD, RAKE THE SOIL SURFACE TO BREAK ANY CRUST. (IF THE WEATHER IS HOT, LIGHTLY IRRIGATE THE SOIL SURFACE PRIOR TO LAYING THE SOD.)
4. LAY SOD STRIPS IN A BRICK-LIKE PATTERN.
5. BUTT ALL JOINTS TIGHTLY AGAINST EACH OTHER (DO NOT STRETCH OR OVERLAP THEM), USING A KNIFE OR MASON'S TROWEL TO TRIM AND FIT SOD INTO IRREGULARLY SHAPED AREAS.
6. ROLL THE SOD LIGHTLY AFTER INSTALLATION TO ENSURE FIRM CONTACT BETWEEN THE SOD AND SOIL.
7. IRRIGATE NEWLY SODDED AREAS UNTIL THE UNDERLYING SOIL IS WET TO A DEPTH OF FOUR INCHES, AND THEN KEEP MOIST UNTIL THE GRASS TAKES ROOT.

SLOPE APPLICATION

1. INSTALL THE SOD STRIPS WITH THE LONGEST DIMENSION PERPENDICULAR TO THE SLOPE.
2. WHERE SLOPES EXCEED A RATIO OF 3:1, STAPLE OR STAKE EACH STRIP AT THE CORNERS AND IN THE MIDDLE.

CHANNEL APPLICATION

(SODDING PROVIDES QUICKER PROTECTION THAN SEEDING AND MAY REDUCE THE RISK OF EARLY WASHOUT.)

1. EXCAVATE THE CHANNEL, ALLOWING FOR THE FULL THICKNESS OF THE SOD.
2. LAY THE SOD STRIPS WITH THE LONGEST DIMENSION PERPENDICULAR TO CHANNEL FLOW.
3. STAPLE OR STAKE EACH STRIP OF SOD AT THE CORNERS AND IN THE MIDDLE.
4. STAPLE JUTE OR BIODEGRADABLE POLYPROPYLENE NETTING OVER THE SODDED AREA TO MINIMIZE THE POTENTIAL FOR WASHOUT DURING ESTABLISHMENT.

MAINTENANCE

_ INSPECT WITHIN 24 HOURS OF EACH RAIN EVENT AND AT LEAST ONCE EVERY SEVEN CALENDAR DAYS UNTIL SOD IS WELL ROOTED.
_ KEEP SOD MOIST UNTIL FULLY ROOTED.
_ AFTER SOD IS WELL-ROOTED (TWO TO THREE WEEKS), MAINTAIN A PLANT HEIGHT OF TWO TO THREE INCHES.
_ TIME MOWING TO AVOID RUTS IN TURF.
_ FERTILIZE TURF AREAS ANNUALLY. APPLY FERTILIZER IN A SPLIT APPLICATION. FOR COOL SEASON GRASSES, APPLY ONE-HALF OF THE FERTILIZER IN LATE SPRING AND ONE-HALF IN EARLY FALL. FOR WARM-SEASON GRASSES, APPLY ONE-THIRD IN EARLY SPRING, ONE-THIRD IN LATE SPRING AND ONE-THIRD IN MID-SUMMER.

REFERENCE IN CHAPTER 7 PAGES 47-50 IN THE INDIANA STORM WATER QUALITY MANUAL

SOD APPLICATION DETAIL

(NO SCALE)

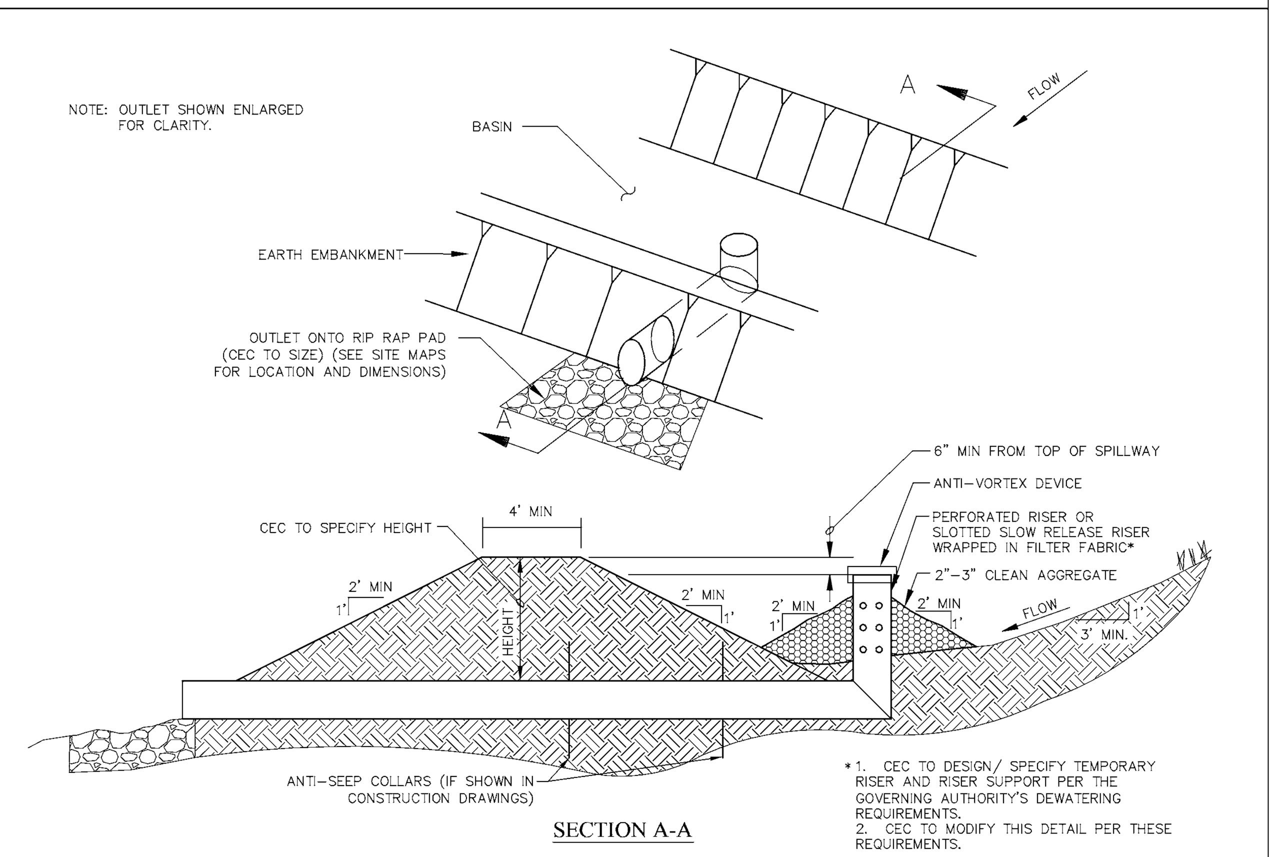

SECTION A-A

*1. CEC TO DESIGN/ SPECIFY TEMPORARY RISER AND RISER SUPPORT PER THE GOVERNING AUTHORITY'S DEWATERING REQUIREMENTS.
2. CEC TO MODIFY THIS DETAIL PER THESE REQUIREMENTS.

GENERAL NOTES:

1. PIPE MATERIAL – CORRUGATED METAL PIPE, PVC, HDPE OR OTHER PLASTIC MATERIAL.
2. FILTER FABRIC (CEC TO SPECIFY TYPE OF FILTER FABRIC).
3. DIMENSIONS – (CEC TO SPECIFY LIMIT OF EXCAVATION AND PIPE DIAMETER ON THIS OR ON THE CONSTRUCTION DRAWINGS.)
4. RISER PERFORATION OR SLOTS – (CEC TO SHOW ON THIS DETAIL OR ON THE CONSTRUCTION DRAWINGS.)
5. ALL PIPE CONNECTION SHALL BE WATERTIGHT.
6. FILL MATERIAL AROUND PIPE SHALL BE COMPACTED IN 4 INCHES LIFTS. A MINIMUM OF 2 FEET OF COMPACTED BACKFILL SHALL BE PLACED OVER THE PIPE BEFORE CROSSING IT WITH CONSTRUCTION TRAFFIC.
7. PONDING OF SEDIMENT LADEN RUNOFF IN SEDIMENT BASIN ACCOMPLISHED BY EMBANKMENT OR EXCAVATION DEPENDING ON TERRAIN. (CEC TO SHOW ON THIS DETAIL OR REFERENCE CONSTRUCTION DRAWINGS FOR BASIN TYPE AND DIMENSIONS.)
8. SIDE SLOPES SHALL BE 2:1 OR FLATTER.

SEDIMENT BASIN WITH PIPE OUTLET

(NO SCALE)

TABLE 1. TEMPORARY SEEDING SPECIFICATIONS

SEED SPECIES 1	RATE PER ACRE	PLANTING DEPTH	OPTIMUM DATES 2
WHEAT OR RYE	150 LBS.	1 TO 1½ INCHES	SEPT. 15 - OCT. 30
SPRING OATS	100 LBS.	1 INCH	MARCH 1 - APRIL 15
ANNUAL RYEGRASS	40 LBS.	¼ INCH	MARCH 1 - MAY 1 AUG. 1 - SEPT. 1
GERMAN MILLET	40 LBS.	1 TO 2 INCHES	MAY 1 - JUNE 1
SUDANGRASS	35 LBS.	1 TO 2 INCHES	MAY 1 - JULY 30
BUCKWHEAT	60 LBS.	1 TO 2 INCHES	APRIL 15 - JUNE 1
CORN (BROADCAST)	300 LBS.	1 TO 2 INCHES	MAY 11 - AUG. 10
SORGHUM	35 LBS.	1 TO 2 INCHES	MAY 1 - JULY 15

1 PERENNIAL SPECIES MAY BE USED AS A TEMPORARY COVER, ESPECIALLY IF THE AREA TO BE SEEDED WILL REMAIN IDLE FOR MORE THAN ONE YEAR.
2 SEEDING DONE OUTSIDE THE OPTIMUM SEEDING DATES INCREASES THE CHANCES OF SEEDING FAILURE. DATES MAY BE EXTENDED OR SHORTENED BASED ON THE LOCATION OF THE PROJECT SITE WITHIN THE STATE.

NOTES

MULCH ALONE IS AN ACCEPTABLE TEMPORARY COVER AND MAY BE USED IN LIEU OF TEMPORARY SEEDING, PROVIDED THAT IT IS APPROPRIATELY ANCHORED. A HIGH POTENTIAL FOR FERTILIZER, SEED, AND MULCH TO WASH EXISTS ON STEEP BANKS, CUTS, AND IN CHANNELS AND AREAS OF CONCENTRATED FLOW.

SEEDBED PREPARATION

1. TEST SOIL TO DETERMINE PH AND NUTRIENT LEVELS.
2. APPLY SOIL AMENDMENTS AS RECOMMENDED BY THE SOIL TEST. IF TESTING IS NOT DONE, APPLY 400 TO 600 POUNDS PER ACRE OF 12-12-12 ANALYSIS FERTILIZER, OR EQUIVALENT.
3. WORK THE SOIL AMENDMENTS INTO THE UPPER TWO TO FOUR INCHES OF THE SOIL WITH A DISK OR RAKE OPERATED ACROSS THE SLOPE.

SEEDING

1. SELECT A SEED SPECIES OR AN APPROPRIATE SEED MIXTURE AND APPLICATION RATE FROM TABLE
2. APPLY SEED UNIFORMLY WITH A DRILL OR CULTIPACKER SEEDER OR BY BROADCASTING. PLANT OR COVER SEED TO THE DEPTH SHOWN IN TABLE 1.

NOTES

1. IF DRILLING OR BROADCASTING THE SEED, ENSURE GOOD SEED-TO-SOIL CONTACT BY FIRMING THE SEEDBED WITH A ROLLER OR CULTIPACKER AFTER COMPLETING SEEDING OPERATIONS.
2. DAILY SEEDING WHEN THE SOIL IS MOIST IS USUALLY MOST EFFECTIVE.
3. IF SEEDING IS DONE WITH A HYDROSEEDER, FERTILIZER AND MULCH CAN BE APPLIED WITH THE SEED IN A SLURRY MIXTURE.
3. APPLY MULCH AND ANCHOR IT IN PLACE.

MAINTENANCE

_ INSPECT WITHIN 24 HOURS OF EACH RAIN EVENT AND AT LEAST ONCE EVERY SEVEN CALENDAR DAYS.
_ CHECK FOR EROSION OR MOVEMENT OF MULCH AND REPAIR IMMEDIATELY.
_ MONITOR FOR EROSION DAMAGE AND ADEQUATE COVER (80 PERCENT DENSITY); RESEED, FERTILIZE, AND APPLY MULCH WHERE NECESSARY.
_ IF NITROGEN DEFICIENCY IS APPARENT, TOP-DRESS FALL SEEDED WHEAT OR RYE SEEDING WITH 50 POUNDS PER ACRE OF NITROGEN IN FEBRUARY OR MARCH.

REFERENCE IN CHAPTER 7 PAGES 31-33 IN THE INDIANA STORM WATER QUALITY MANUAL

TEMPORARY SEED

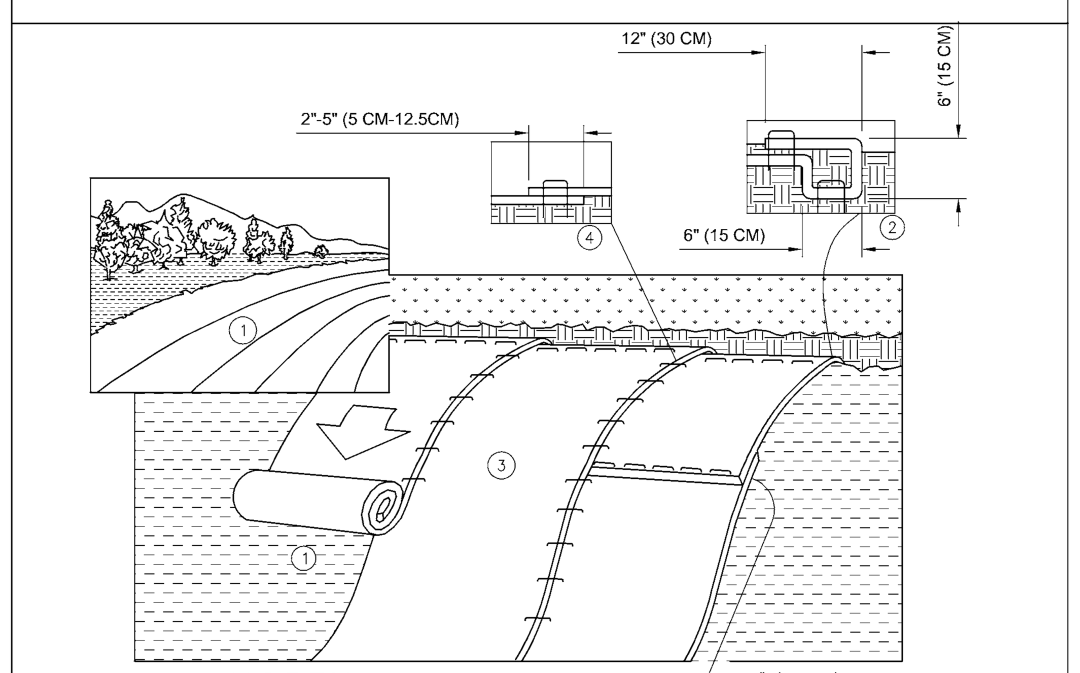

EROSION CONTROL Products
Guaranteed SOLUTIONS
14649 HIGHWAY 41 NORTH
EVANSVILLE, IN 47725
800-720-2040
www.nagreen.com

1. PREPARE SOIL BEFORE INSTALLING ROLLED EROSION CONTROL PRODUCTS (RECP's), INCLUDING ANY NECESSARY APPLICATION OF LIME, FERTILIZER, AND SEED. NOTE: WHEN USING CELL-O-SEED DO NOT SEED PREPARED AREA. CELL-O-SEED MUST BE INSTALLED WITH PAPER SIDE DOWN.
2. BEGIN AT THE TOP OF THE SLOPE BY ANCHORING THE RECP'S IN A 6" (15 CM) DEEP X 6" (15 CM) WIDE TRENCH WITH APPROXIMATELY 12" (30 CM) OF RECP'S EXTENDED BEYOND THE UP-SLOPE PORTION OF THE TRENCH. ANCHOR THE RECP'S WITH A ROW OF STAPLES/STAKES APPROXIMATELY 12" (30 CM) APART IN THE BOTTOM OF THE TRENCH. BACKFILL AND COMPACT THE TRENCH AFTER STAPLING. APPLY SEED TO COMPACTED SOIL AND FOLD REMAINING 12" (30 CM) PORTION OF RECP'S BACK OVER SEED AND COMPACTED SOIL. SECURE RECP'S COVER COMPACTED SOIL WITH A ROW OF STAPLES/STAKES SPACED APPROXIMATELY 12" (30 CM) APART ACROSS THE WIDTH OF THE RECP'S.
3. ROLL THE RECP'S (A.) DOWN OR (B.) HORIZONTALLY ACROSS THE SLOPE. RECP'S WILL UNROLL WITH APPROPRIATE SIDE AGAINST THE SOIL SURFACE. ALL RECP's MUST BE SECURELY FASTENED TO SOIL SURFACE BY PLACING STAPLES/STAKES IN APPROPRIATE LOCATIONS AS SHOWN IN THE STAPLE PATTERN GUIDE. WHEN USING THE DOT SYSTEM ™, STAPLES/STAKES SHOULD BE PLACED THOUGH EACH OF THE COLORED DOTS CORRESPONDING TO THE APPROPRIATE STAPLE PATTERN.
4. THE EDGES OF PARALLEL RECP's MUST BE STAPLED WITH APPROXIMATELY 2" - 5" (5 CM - 12.5 CM) OVERLAP DEPENDING ON RECP's TYPE.
5. CONSECUTIVE RECP'S SPLICED DOWN THE SLOPE MUST BE PLACED END OVER END (SHINGLE STYLE) WITH AN APPROXIMATE 3" (7.5 CM) OVERLAP. STAPLE THROUGH OVERLAPPED AREA, APPROXIMATELY 12" (30 CM) APART ACROSS ENTIRE RECP's WIDTH. NOTE: IN LOOSE SOIL CONDITIONS, THE USE OF STAPLE R STAKE LENGTHS GREATER THAN 6" (15 CM) MAY BE NECESSAY TO PROPERLY SECURE THE RECP's.

SLOPE INSTALLATION

(NO SCALE)

OPEN LOW-MAINTENANCE AREAS (REMAINING IDLE MORE THAN SIX MONTHS)

SEED MIXTURES	RATE PER ACRE PURE LIVE SEED	OPTIMUM SOIL PH
1. PERENNIAL RYEGRASS - WHITE CLOVER	70 LBS. 2 LBS.	5.6 TO 7.0
2. PERENNIAL RYEGRASS - TALL FESCUE	70 LBS. 50 LBS.	5.6 TO 7.0
3. TALL FESCUE - WHITE CLOVER	70 LBS. 2 LBS.	5.5 TO 7.5

STEEP BANKS AND CUTS, LOW-MAINTENANCE AREAS (NOT MOWED)

SEED MIXTURES	RATE PER ACRE PURE LIVE SEED	OPTIMUM SOIL PH
1. SMOOTH BROME GRASS - RED CLOVER	35 LBS. 20 LBS.	5.5 TO 7.0
2. TALL FESCUE - WHITE CLOVER	50 LBS. 2 LBS.	5.5 TO 7.5
3. TALL FESCUE - RED CLOVER	50 LBS. 20 LBS.	5.5 TO 7.5
4. ORCHARD GRASS - RED CLOVER - WHITE CLOVER	30 LBS. 20 LBS. 2 LBS.	5.6 TO 7.0
5. CROWNVETCH - TALL FESCUE	12 LBS. 30 LBS.	5.6 TO 7.0

LAWNS AND HIGH-MAINTENANCE AREAS

SEED MIXTURES	RATE PER ACRE PURE LIVE SEED	OPTIMUM SOIL PH
1. BLUEGRASS	140 LBS.	5.5 TO 7.0
2. PERENNIAL RYEGRASS (TURF TYPE)	60 LBS. 90 LBS.	5.6 TO 7.0
3. TALL FESCUE (TURF TYPE) - BLUEGRASS	170 LBS. 30 LBS.	5.6 TO 7.5

CHANNELS AND AREAS OF CONCENTRATED FLOW

SEED MIXTURES	RATE PER ACRE PURE LIVE SEED	OPTIMUM SOIL PH
1. PERENNIAL RYEGRASS - WHITE	150 LBS. 2 LBS.	5.5 TO 7.0
2. KENTUCKY BLUEGRASS - SMOOTH BROMEGRASS - SWITCHGRASS - TIMOTHY - PERENNIAL RYEGRASS - WHITE CLOVER	20 LBS. 10 LBS. 3 LBS. 4 LBS. 10 LBS. 2 LBS.	5.5 TO 7.5
3. TALL FESCUE - WHITE CLOVER	150 LBS. 2 LBS.	5.5 TO 7.5
4. TALL FESCUE - PERENNIAL RYEGRASS - KENTUCKY BLUEGRASS	150 LBS. 20 LBS. 20 LBS.	5.5 TO 7.5

NOTES

1. AN OAT OR WHEAT COMPANION OR NURSE CROP MAY BE USED WITH ANY OF THE ABOVE PERMANENT SEEDING MIXTURES, AT THE FOLLOWING RATES:
(A) SPRING OATS - ONE-FOURTH TO THREE-FOURTHS BUSHEL PER ACRE
(B) WHEAT - NO MORE THAN ONE-HALF BUSHEL PER ACRE
2. A HIGH POTENTIAL FOR FERTILIZER, SEED, AND MULCH TO WASH EXISTS ON STEEP BANKS, CUTS, AND IN CHANNELS AND AREAS OF CONCENTRATED

INSTALLATION

1. GRADE THE SITE TO ACHIEVE POSITIVE DRAINAGE.
2. ADD TOPSOIL OR COMPOST MULCH TO ACHIEVE NEEDED DEPTH FOR ESTABLISHMENT OF VEGETATION. (COMPOST MATERIAL MAY BE ADDED TO IMPROVE SOIL MOISTURE HOLDING CAPACITY, SOIL FRIABILITY, AND NUTRIENT AVAILABILITY.)

SEEDBED PREPARATION

1. TEST SOIL TO DETERMINE PH AND NUTRIENT LEVELS.
2. APPLY SOIL AMENDMENTS AS RECOMMENDED BY THE SOIL TEST AND WORK INTO THE UPPER TWO TO FOUR INCHES OF SOIL. IF TESTING IS NOT DONE, APPLY 400 TO 600 POUNDS PER ACRE OF 12-12-12 ANALYSIS FERTILIZER, OR EQUIVALENT.
3. TILL THE SOIL TO OBTAIN A UNIFORM SEEDBED. USE A DISK OR RAKE, OPERATED ACROSS THE SLOPE, TO WORK THE SOIL AMENDMENTS INTO THE UPPER TWO TO FOUR INCHES OF THE SOIL.

SEEDING

OPTIMUM SEEDING DATES ARE MARCH 1 TO MAY 10 AND AUGUST 10 TO SEPTEMBER 30.PERMANENT SEEDING DONE BETWEEN MAY 10 AND AUGUST 10 MAY NEED TO BE IRRIGATED. SEEDING OUTSIDE OR BEYOND OPTIMUM SEEDING DATES IS STILL POSSIBLE WITH THE UNDERSTANDING THAT RESEEDING OR OVERSEEDING MAY BE REQUIRED IF ADEQUATE SURFACE COVER IS NOT ACHIEVED. RESEEDING OR OVERSEEDING CAN BE EASILY ACCOMPLISHED IF THE SOIL SURFACE REMAINS WELL PROTECTED WITH MULCH.

1. SELECT A SEEDING MIXTURE AND RATE FROM TABLE 1. SELECT SEED MIXTURE BASED ON SITE CONDITIONS, SOIL PH, INTENDED LAND USE, AND EXPECTED LEVEL OF MAINTENANCE.
2. APPLY SEED UNIFORMLY WITH A DRILL OR CULTIPACKER SEEDER OR BY BROADCASTING. PLANT OR COVER THE SEED TO A DEPTH OF ONE-FOURTH TO ONE-HALF INCH. IF DRILLING OR BROADCASTING THE SEED, ENSURE GOOD SEED-TO-SOIL CONTACT BY FIRMING THE SEEDBED WITH A ROLLER OR CULTIPACKER AFTER COMPLETING SEEDING OPERATIONS. (IF SEEDING IS DONE WITH A HYDROSEEDER, FERTILIZER AND MULCH CAN BE APPLIED WITH THE SEED IN A SLURRY MIXTURE.)
3. MULCH ALL SEEDED AREAS AND USE APPROPRIATE METHODS TO ANCHOR THE MULCH IN PLACE. CONSIDER USING EROSION CONTROL BLANKETS ON SLOPING AREAS AND CONVEYANCE CHANNELS

MAINTENANCE

_ INSPECT WITHIN 24 HOURS OF EACH RAIN EVENT AND AT LEAST ONCE EVERY SEVEN CALENDAR DAYS UNTIL THE VEGETATION IS SUCCESSFULLY ESTABLISHED.
_ CHARACTERISTICS OF A SUCCESSFUL STAND INCLUDE VIGOROUS DARK GREEN OR BLUISHGREEN SEEDLINGS WITH A UNIFORM VEGETATIVE COVER DENSITY OF 90 PERCENT OR MORE.
_ CHECK FOR EROSION OR MOVEMENT OF MULCH.
_ REPAIR DAMAGED, BARE, GULLIED, OR SPARSELY VEGETATED AREAS AND THEN FERTILIZE, RESEED, AND APPLY AND ANCHOR MULCH.
_ IF PLANT COVER IS SPARSE OR PATCHY, EVALUATE THE PLANT MATERIALS CHOSEN, SOIL FERTILITY, MOISTURE CONDITION, AND MULCH APPLICATION; REPAIR AFFECTED AREAS EITHER BY OVERSEEDING OR PREPARING A NEW SEEDBED AND RESEEDING. APPLY AND ANCHOR MULCH ON THE NEWLY SEEDED AREAS.
_ IF VEGETATION FAILS TO GROW, CONSIDER SOIL TESTING TO DETERMINE SOIL PH OR NUTRIENT DEFICIENCY PROBLEMS. (CONTACT YOUR SOIL AND WATER CONSERVATION DISTRICT OR COOPERATIVE EXTENSION OFFICE FOR ASSISTANCE.)
_ IF ADDITIONAL FERTILIZATION IS NEEDED TO GET A SATISFACTORY STAND, DO SO ACCORDING TO SOIL TEST RECOMMENDATIONS.
_ ADD FERTILIZER THE FOLLOWING GROWING SEASON. FERTILIZE ACCORDING TO SOIL TEST RECOMMENDATIONS.
_ FERTILIZE TURF AREAS ANNUALLY. APPLY FERTILIZER IN A SPLIT APPLICATION. FOR COOL-SEASON GRASSES, APPLY ONE-HALF OF THE FERTILIZER IN LATE SPRING AND ONE HALFIN EARLY FALL. FOR WARM-SEASON GRASSES, APPLY ONE-THIRD IN EARLY SPRING, ONE-THIRD IN LATE SPRING, AND THE REMAINING ONE-THIRD IN MIDDLE SUMMER.

TABLE 1. PERMANENT SEEDING RECOMMENDATIONS
THIS TABLE PROVIDES SEVERAL SEED MIXTURE OPTIONS. ADDITIONAL SEED MIXTURES ARE AVAILABLE COMMERCIALLY. WHEN SELECTING A MIXTURE, CONSIDER INTENDED LAND USE AND SITE CONDITIONS, INCLUDING SOIL PROPERTIES (E.G., SOIL PH AND DRAINAGE), SLOPE ASPECT, AND THE TOLERANCE OF EACH SPECIES TO SHADE AND DROUGHT.

REFERENCE IN CHAPTER 7 PAGES 35-40 IN THE INDIANA STORM WATER QUALITY MANUAL

PERMANENT SEED

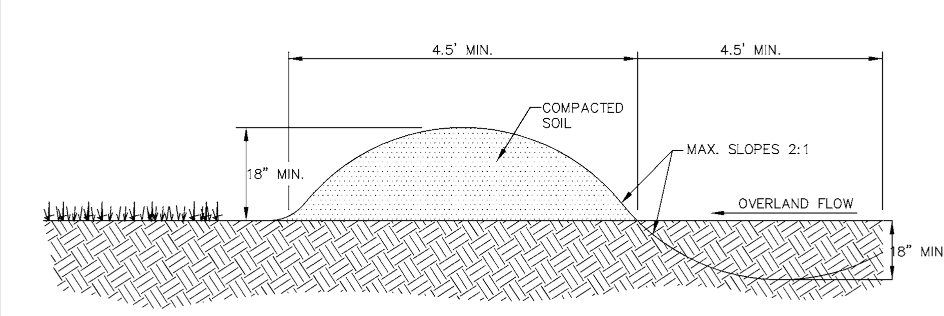

NOTES:
1. REMOVE ANY EXISTING VEGETATION AND SCARIFY OR BENCH ADJACENT SOILS PRIOR TO PLACING BERM.
2. BERM MATERIALS MUST BE ADEQUATELY COMPACTED AND STABILIZED.
3. REFER TO SWPPP FOR TEMPORARY AND/ OR FINAL STABILIZATION MEASURES.
4. BERM SHALL NOT BE CONSTRUCTED OF TOPSOIL.
5. REFERENCED IN CHAPTER 7 PAGE 76 IN THE INDIANA STORM WATER QUALITY MANUAL.

TEMPORARY DIVERSION DIKE

(NO SCALE)

NOTES:
1. REMOVE ANY EXISTING VEGETATION AND SCARIFY OR BENCH ADJACENT SOILS PRIOR TO PLACING BERM.
2. BERM MATERIALS MUST BE ADEQUATELY COMPACTED AND STABILIZED IN 6-8 INCH LIFTS.
3. REFER TO E&S PHASE I & II FOR TEMPORARY AND/OR FINAL STABILIZATION MEASURES.
4. BERM SHALL NOT BE CONSTRUCTED OF TOPSOIL.

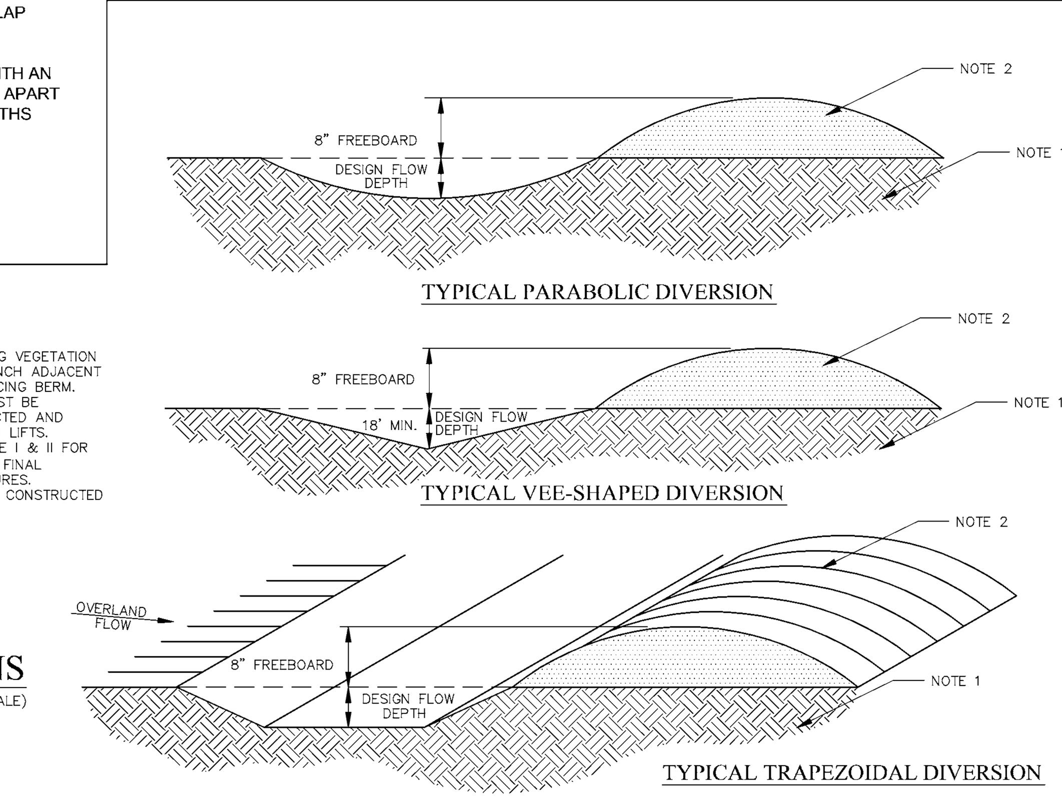

DIVERSIONS

(NO SCALE)

10505 N. College Avenue
Indianapolis, Indiana 46280
weihe.net
317 846 - 6611
800 452 - 6408
317 843 - 0546 fax
ALLAN H. WEIHE, P.E., L.S. - FOUNDER

WEIHE ENGINEERS
Land Surveying | Civil Engineering
Landscape Architecture

PROJECT NO.: W14.0460
DWG NAME: w140460-C104 swppp det.dwg
DESIGNED BY: RLW/RAM
DRAWN BY: RLW/RAM
CHECKED BY: AJS
DATE: 02.12.2015

DATE	BY	REVISIONS AND ISSUES
02.12.2015	BJS	SUBMITTED FOR INITIAL REVIEW

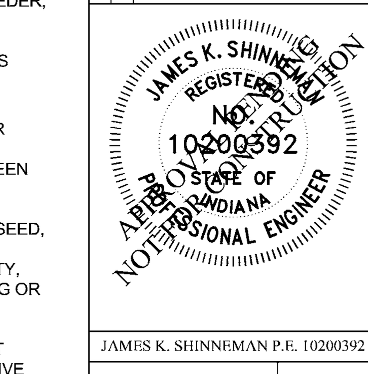

JAMES K. SHINNEMAN P.E. 10200392

PREPARED FOR:
KROGER STORE J-979
KROGER MARKETPLACE - MALLORY PARKWAY AND U.S. 31
SWPPP DETAILS
Part of the NE¼ of Section 15, Township 12 North, Range 4 East, Franklin Township, Johnson County, Indiana

SHEET NO.
C1.08
PROJECT NO.
W14.0460

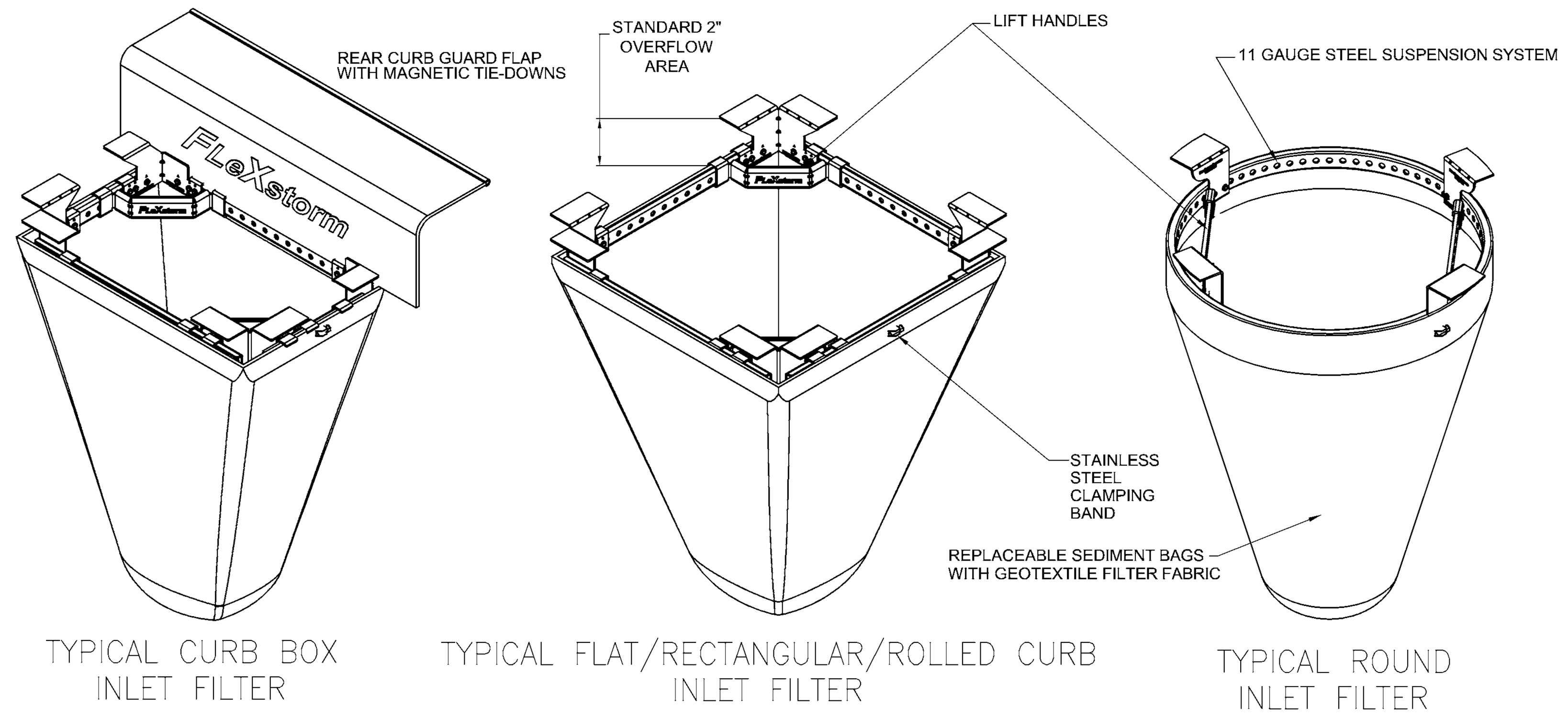

TYPICAL CURB BOX INLET FILTER

TYPICAL FLAT/RECTANGULAR/ROLLED CURB INLET FILTER

TYPICAL ROUND INLET FILTER

INSTALLATION:
1. REMOVE GRATE
2. DROP FLEXSTORM INLET FILTER ONTO LOAD BEARING LIP OF CASTING OR CONCRETE STRUCTURE
3. REPLACE GRATE

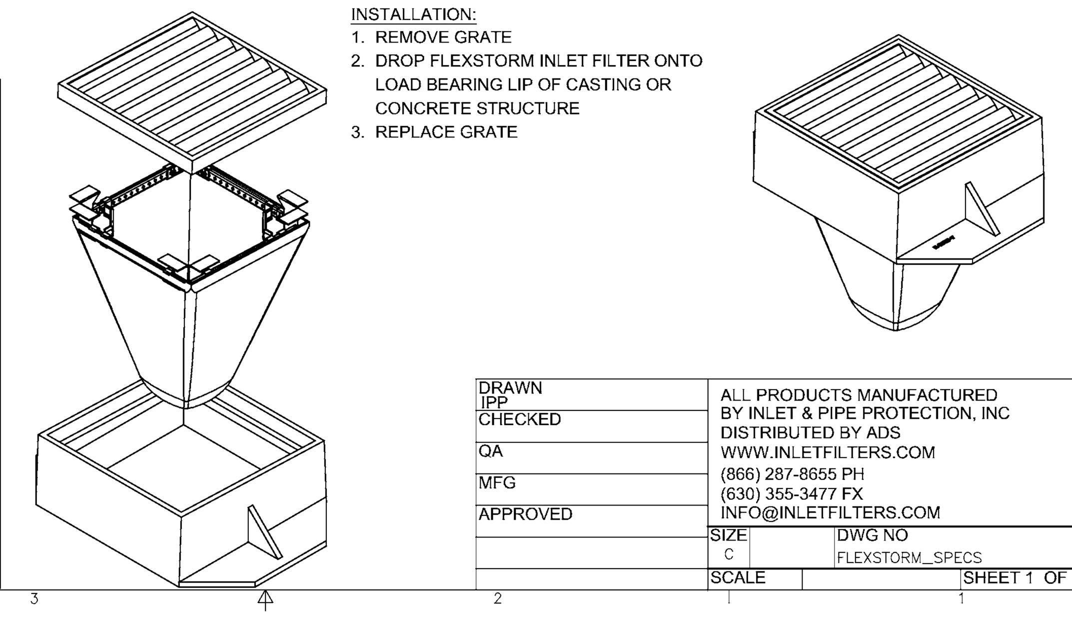

FLEXSTORM Inlet Filter Specifications

WOVEN Geotextile Sediment Bag Specs (2 ft³ vol)		
Material Property	Test Method	Value (ave)
Grab Tensile	ASTM D 4632	255 x 275
Puncture Strength	ASTM D 4833	135 lbs
Trapezoidal Tear	ASTM D 4533	75 lbs
UV Resistance	ASTM D 4355	90%
App Open Size (AOS)	ASTM D 4751	20 sieve
Permittivity	ASTM D 4491	1.5 / sec
Water Flow Rate	ASTM D 4491	200 gpm/sqft
Sediment Removal Efficiency (8% mix)	ASTM D 7351	82%

DRAWN	ALL PRODUCTS MANUFACTURED BY INLET & PIPE PROTECTION, INC
JPP	DISTRIBUTED BY ADS
CHECKED	WWW.INLETFILTERS.COM
QA	(866) 287-8655 PH
MFG	(630) 355-3477 FX
APPROVED	INFO@INLETFILTERS.COM

SIZE C | DWG NO FLEXSTORM_SPECS | REV
SCALE | SHEET 1 OF 1

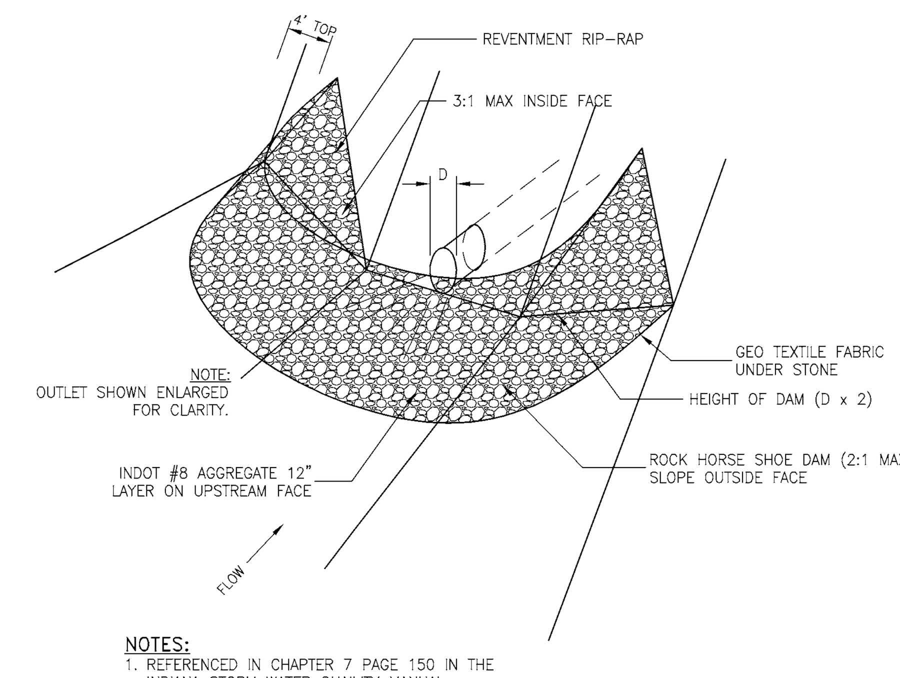

NOTES:
1. REFERENCED IN CHAPTER 7 PAGE 150 IN THE INDIANA STORM WATER QUALITY MANUAL.

ROCK HORSE SHOE CHECK DAM

SCHEMATIC (NO SCALE)

2-WOOD POST/STAKES WRAPPED WITH SILT FENCE AND ROTATED AT LEAST ONE FULL TURN TO SECURE SILT FENCE END IN PLACE

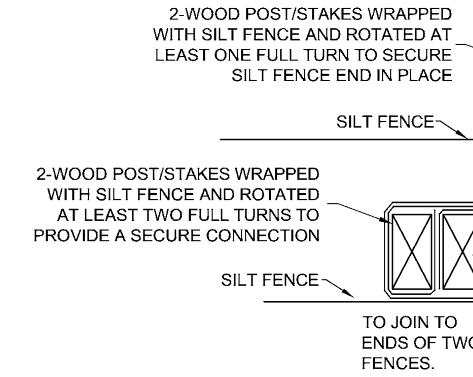

MAXIMUM LOAD SLOPE AND DISTANCE FOR WHICH A SILT FENCE IS APPLICABLE

LOAD SLOPE	MAX. DISTANCE ABOVE FENCE
LESS THAN 2%	100 FT.
2 TO 5%	75 FT.
5 TO 10%	50 FT.
10 TO 20%	25 FT.
MORE THAN 20%	15 FT.

POSTS: STEEL T OR U TYPE, OR 2"X2" HARD WOOD POST
FENCE: WOVEN WIRE, 14-1/2 GA., 6" MAX. MESH OPENING
FABRIC: IN ACCORDANCE WITH ASTM D 6461 LATEST EDITION.

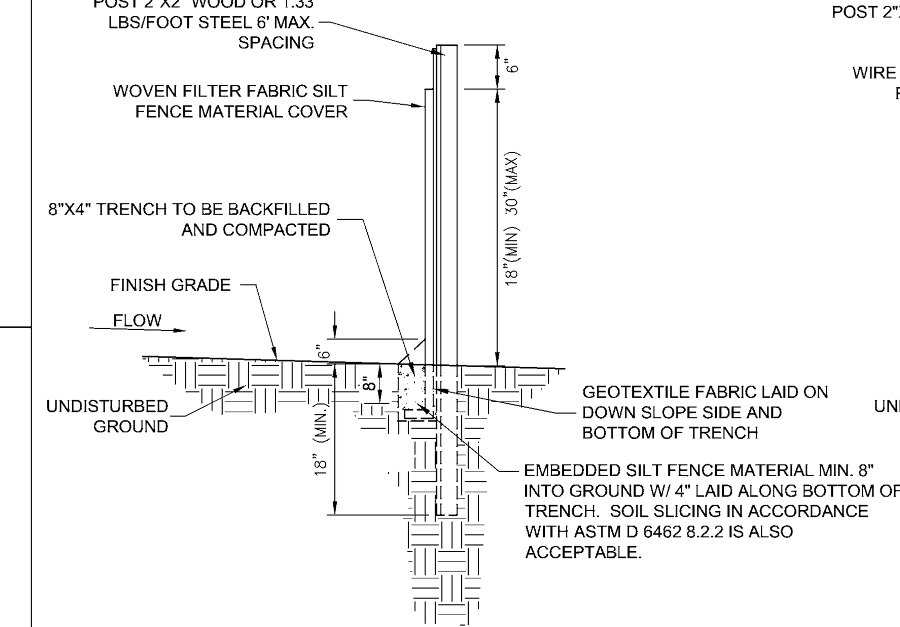

WITHOUT WIRE SUPPORT

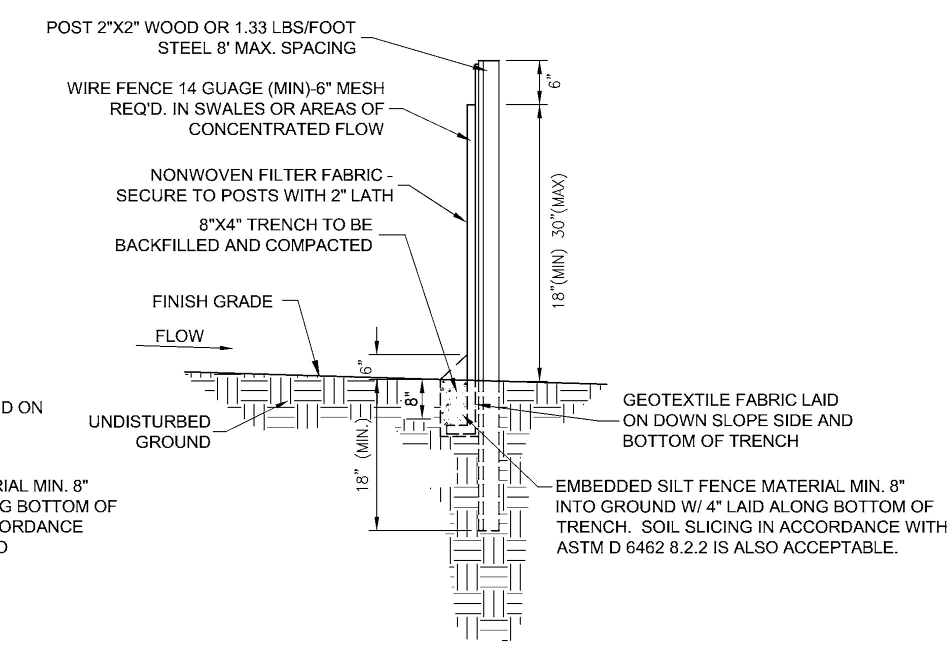

WITH WIRE SUPPORT

INSTALLATION
PREFABRICATED SILT FENCE
1. LAY OUT THE LOCATION OF THE FENCE SO THAT IT IS PARALLEL TO THE CONTOUR OF THE SLOPE AND AT LEAST 10 FEET BEYOND THE TOE OF THE SLOPE TO PROVIDE A SEDIMENT STORAGE AREA. TURN THE ENDS OF THE FENCE UP SLOPE SUCH THAT THE POINT OF CONTACT BETWEEN THE GROUND AND THE BOTTOM OF THE FENCE END TERMINATES AT A HIGHER ELEVATION THAN THE TOP OF THE FENCE AT ITS LOWEST POINT.
2. EXCAVATE AN EIGHT-INCH DEEP BY FOUR-INCH WIDE TRENCH ALONG THE ENTIRE LENGTH OF THE FENCE LINE. INSTALLATION BY PLOWING IS ALSO ACCEPTABLE.
3. INSTALL THE SILT FENCE WITH THE FILTER FABRIC LOCATED ON THE UP-SLOPE SIDE OF THE EXCAVATED TRENCH AND THE SUPPORT POSTS ON THE DOWN-SLOPE SIDE OF THE TRENCH.
4. DRIVE THE SUPPORT POSTS AT LEAST 18 INCHES INTO THE GROUND, TIGHTLY STRETCHING THE FABRIC BETWEEN THE POSTS AS EACH IS DRIVEN INTO THE SOIL. MINIMUM OF 12 INCHES OF THE FILTER FABRIC SHOULD EXTEND INTO THE TRENCH.
5. LAY THE LOWER FOUR INCHES OF FILTER FABRIC ON THE BOTTOM OF THE TRENCH AND EXTEND IT TOWARD THE UP-SLOPE SIDE OF THE TRENCH.
6. BACKFILL THE TRENCH WITH SOIL MATERIAL AND COMPACT IT IN PLACE.

NOTE: IF THE SILT FENCE IS BEING CONSTRUCTED ON-SITE, ATTACH THE FILTER FABRIC TO THE SUPPORT POSTS AND ATTACH WOODEN LATHE TO SECURE THE FABRIC TO THE POSTS. ALLOW FOR AT LEAST 12 INCHES OF FABRIC BELOW GROUND LEVEL. COMPLETE THE SILT FENCE INSTALLATION, FOLLOWING STEPS 1 THROUGH 6 ABOVE.

MAINTENANCE
_ INSPECT WITHIN 24 HOURS OF A RAIN EVENT AND AT LEAST ONCE EVERY SEVEN CALENDAR DAYS.
_ IF FENCE FABRIC TEARS, STARTS TO DECOMPOSE, OR IN ANY WAY BECOMES INEFFECTIVE, REPLACE THE AFFECTED PORTION IMMEDIATELY. NOTE: ALL REPAIRS SHOULD MEET SPECIFICATIONS AS OUTLINED WITHIN THIS MEASURE.
_ REMOVE DEPOSITED SEDIMENT WHEN IT IS CAUSING THE FILTER FABRIC TO BULGE OR WHEN IT REACHES ONE-HALF THE HEIGHT OF THE FENCE AT ITS LOWEST POINT. WHEN CONTRIBUTING DRAINAGE AREA HAS BEEN STABILIZED, REMOVE THE FENCE AND SEDIMENT DEPOSITS, GRADE THE SITE TO BLEND WITH THE SURROUNDING AREA, AND STABILIZE.

REFERENCE IN CHAPTER 7 PAGES 215-221 IN THE INDIANA STORM WATER QUALITY MANUAL

SEDIMENTATION/SILT FENCE

(NO SCALE)

"SWPPP INFORMATION" MUST BE DISPLAYED PROMINENTLY ACROSS THE TOP OF THE SIGN, AS SHOWN IN THE DETAIL.

SIGN TO BE CONSTRUCTED OF A RIGID MATERIAL, SUCH AS PLYWOOD OR OUTDOOR SIGN BOARD. SIGN MUST BE CONSTRUCTED IN A MANNER TO PROTECT DOCUMENTS FROM DAMAGE DUE TO WEATHER (WIND, SUN, MOISTURE, ETC.).

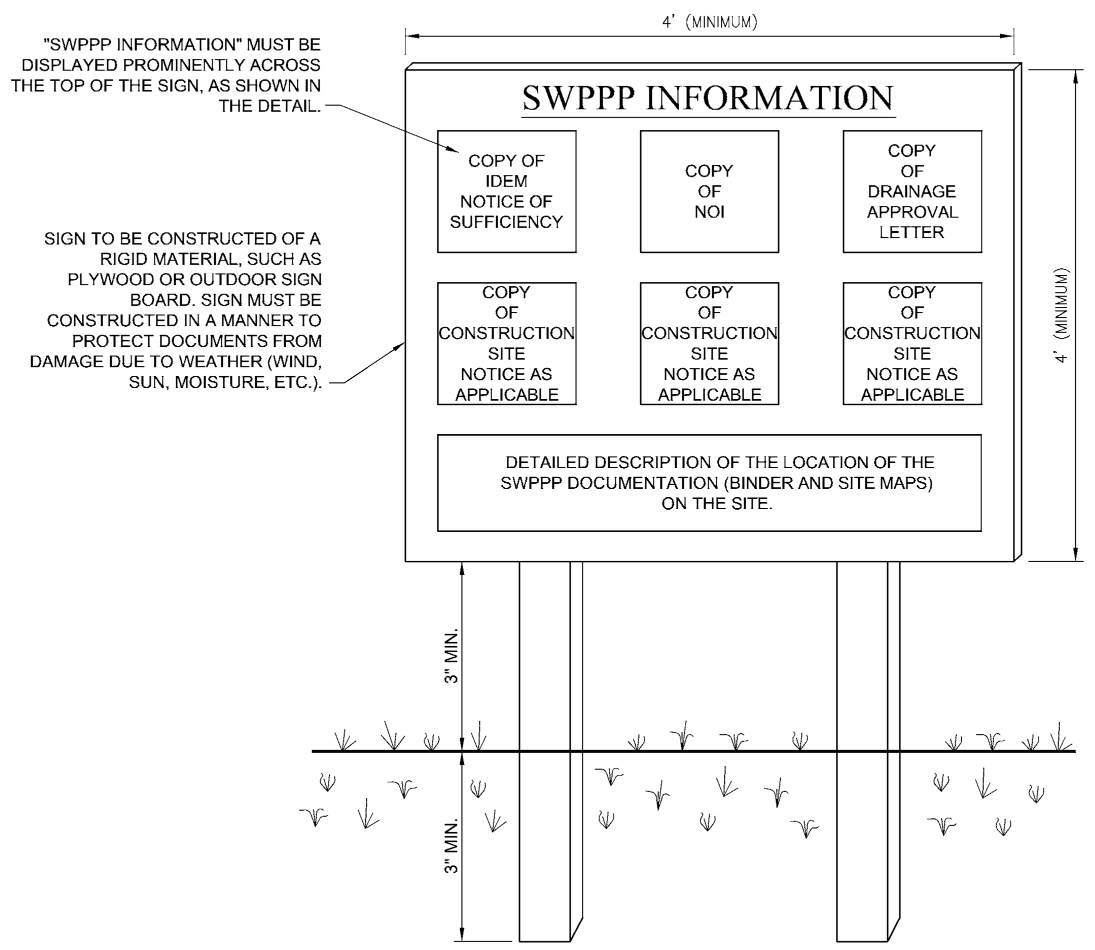

SWPPP INFORMATION SIGN

(NO SCALE)

NOTES:
1. THE SWPPP INFORMATION SIGN MUST BE LOCATED NEAR THE CONSTRUCTION EXIT OF THE SITE, SUCH THAT IT IS ACCESSIBLE AND VIEWABLE BY THE GENERAL PUBLIC, BUT NOT OBSTRUCTING VIEWS AS TO CAUSE A SAFETY HAZARD.
2. ALL POSTED DOCUMENTS MUST BE MAINTAINED IN A CLEARLY READABLE CONDITION AT ALL TIMES THROUGHOUT CONSTRUCTION AND UNTIL THE NOTICE-OF-TERMINATION (NOT) IS FILED FOR THE PERMIT.
3. CONTRACTOR SHALL POST OTHER STORM WATER AND/OR EROSION AND SEDIMENT CONTROL RELATED PERMITS ON THE SIGN AS REQUIRED BY THE GOVERNING AGENCY.
4. SIGN SHALL BE LOCATED OUTSIDE OF PUBLIC RIGHT-OF-WAY AND EASEMENTS UNLESS APPROVED BY THE GOVERNING AGENCY.
5. CONTRACTOR IS RESPONSIBLE FOR ENSURING STABILITY OF THE SWPPP INFORMATION SIGN.

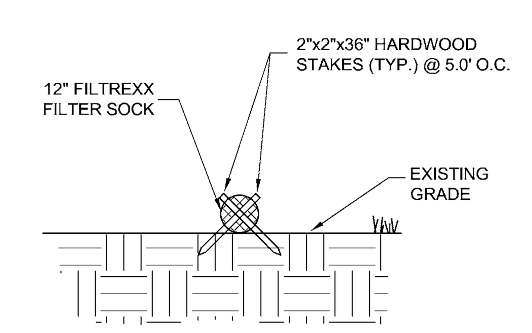

COIR LOG (FIBER ROLL)

MAINTENANCE:
- INSPECT DAILY.
- REMOVE ACCUMULATED SEDIMENT FROM PAVED AREA (DO NOT FLUSH WITH WATER) AFTER EACH STORM EVENT. DEPOSIT SEDIMENT IN AN AREA WHERE IT WILL NOT RE-ENTER THE PAVED AREA OR STORM DRAINS.
- INSPECT FOR DAMAGE BY VEHICULAR TRAFFIC AND REPAIR IF NEEDED.

DANDY BAG

INSTALLATION AND MAINTENANCE GUIDELINES

INSTALLATION: REMOVE THE GRATE FROM CATCH BASIN. IF USING OPTIONAL OIL ABSORBENTS; PLACE ABSORBENT PILLOW IN UNIT. STAND THE GRATE ON END. MOVE THE TOP LIFTING STRAPS OUT OF THE WAY AND PLACE THE GRATE INTO THE DANDY BAG®II SO THAT THE GRATE IS BELOW THE TOP STRAPS AND ABOVE THE LOWER STRAPS. HOLDING THE LIFTING DEVICES, INSERT THE GRATE INTO THE INLET.

MAINTENANCE: REMOVE ALL ACCUMULATED SEDIMENT AND DEBRIS FROM VICINITY OF UNIT AFTER EACH STORM EVENT. AFTER EACH STORM EVENT AND AT REGULAR INTERVALS, LOOK INTO THE DANDY BAG®II. IF THE CONTAINMENT AREA IS MORE THAN 1/3 FULL OF SEDIMENT, THE UNIT MUST BE EMPTIED. TO EMPTY UNIT, LIFT THE UNIT OUT OF THE INLET USING THE LIFTING STRAPS AND REMOVE THE GRATE. IF USING OPTIONAL OIL ABSORBENTS; REPLACE ABSORBENT WHEN NEAR SATURATION.

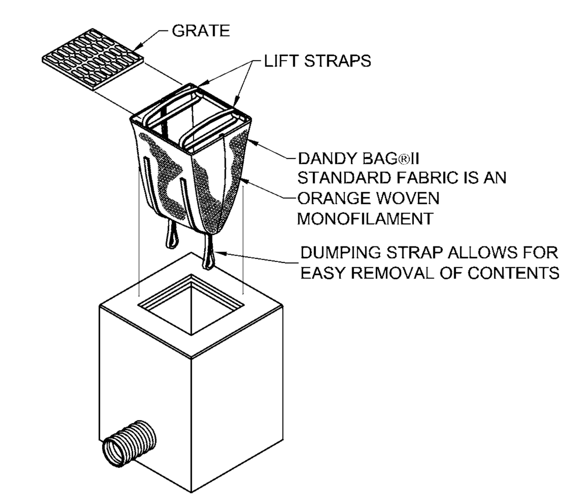

DROP INLET CURB PROTECTION

DETAIL PROVIDED BY DANDY BAG (NO SCALE)

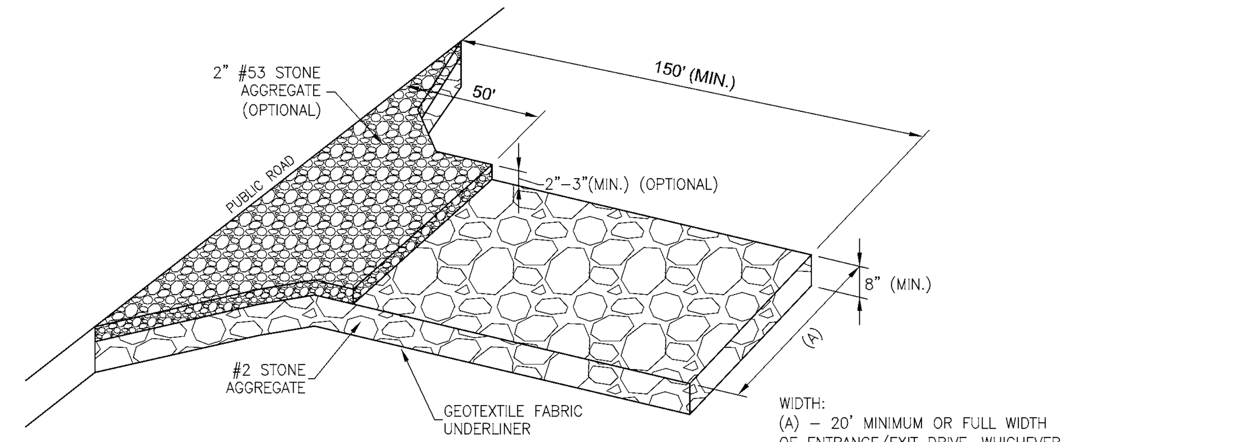

WIDTH:
(A) – 20' MINIMUM OR FULL WIDTH OF ENTRANCE/EXIT DRIVE, WHICHEVER IS GREATER.

INSTALLATION:
1. REMOVE ALL VEGETATION AND OTHER OBJECTIONABLE MATERIAL FROM THE FOUNDATION AREA.
2. GRADE FOUNDATION AND CROWN FOR POSITIVE DRAINAGE. IF THE SLOPE OF THE CONSTRUCTION ENTRANCE IS TOWARD A PUBLIC ROAD AND EXCEEDS TWO PERCENT, CONSTRUCT AN EIGHT INCH HIGH DIVERSION RIDGE WITH A RATIO OF 3–TO–1 SIDE SLOPES ACROSS THE FOUNDATION AREA ABOUT 15 FEET FROM THE ENTRANCE TO DIVERT RUNOFF AWAY FROM THE ROAD.
3. INSTALL A CULVERT PIPE UNDER THE PAD IF NEEDED TO MAINTAIN PROPER PUBLIC ROAD DRAINAGE.
4. IF WET CONDITIONS ARE ANTICIPATED, PLACE GEOTEXTILE FABRIC ON THE GRADED FOUNDATION TO IMPROVE STABILITY.
5. PLACE AGGREGATE (INDOT CA NO. 2) TO THE DIMENSIONS AND GRADE SHOWN IN THE CONSTRUCTION PLANS, LEAVING THE SURFACE SMOOTH AND SLOPED FOR DRAINAGE.
6. TOP–DRESS THE FIRST 50 FEET ADJACENT TO THE PUBLIC ROADWAY WITH TWO TO THREE INCHES OF WASHED AGGREGATE (INDOT CA NO. 53) [OPTIONAL, USED PRIMARILY WHERE THE PURPOSE OF THE PAD IS TO KEEP SOIL FROM ADHERING TO VEHICLE TIRES].
7. WHERE POSSIBLE, DIVERT ALL STORM WATER RUNOFF AND DRAINAGE FROM THE INGRESS/EGRESS PAD TO A SEDIMENT TRAP OR BASIN.

MAINTENANCE:
_ INSPECT DAILY.
_ RESHAPE PAD AS NEEDED FOR DRAINAGE AND RUNOFF CONTROL.
_ TOP DRESS WITH CLEAN AGGREGATE AS NEEDED.
_ IMMEDIATELY REMOVE MUD AND SEDIMENT TRACKED OR WASHED ONTO PUBLIC ROADS.
_ FLUSHING SHOULD ONLY BE USED IF THE WATER CAN BE CONVEYED INTO A SEDIMENT TRAP OR BASIN.

REFRENCED IN CHAPTER 7 PAGE 17–20 IN INIANA STORM WATER QUALITY MANUAL.

TEMPORARY CONSTRUCTION INGRESS/EGRESS PAD

LARGE SITES – TWO ACRES OR LARGER (NO SCALE)

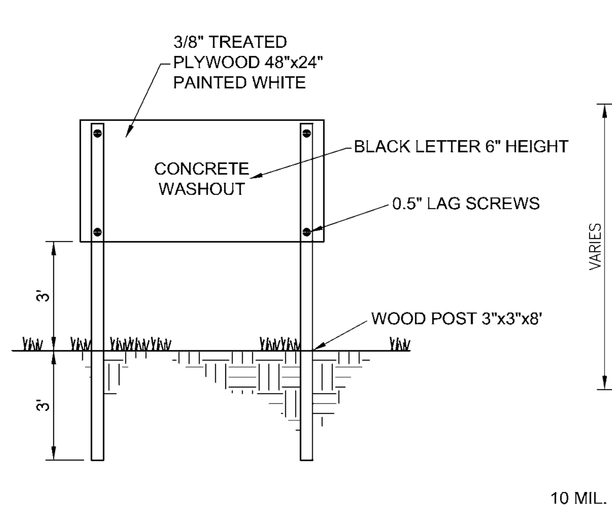

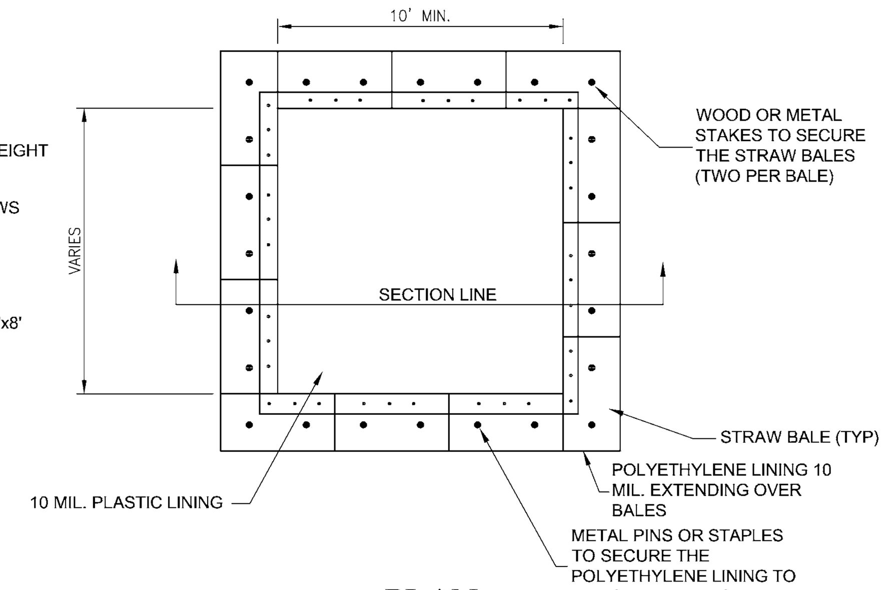

PLAN

NOTES:
1. ACTUAL LAYOUT DETERMINED IN FIELD.
2. THE CONCRETE WASHOUT SIGN SHALL BE INSTALLED WITHIN 30FT. OF THE TEMP. CONCRETE WASHOUT FACILITY.

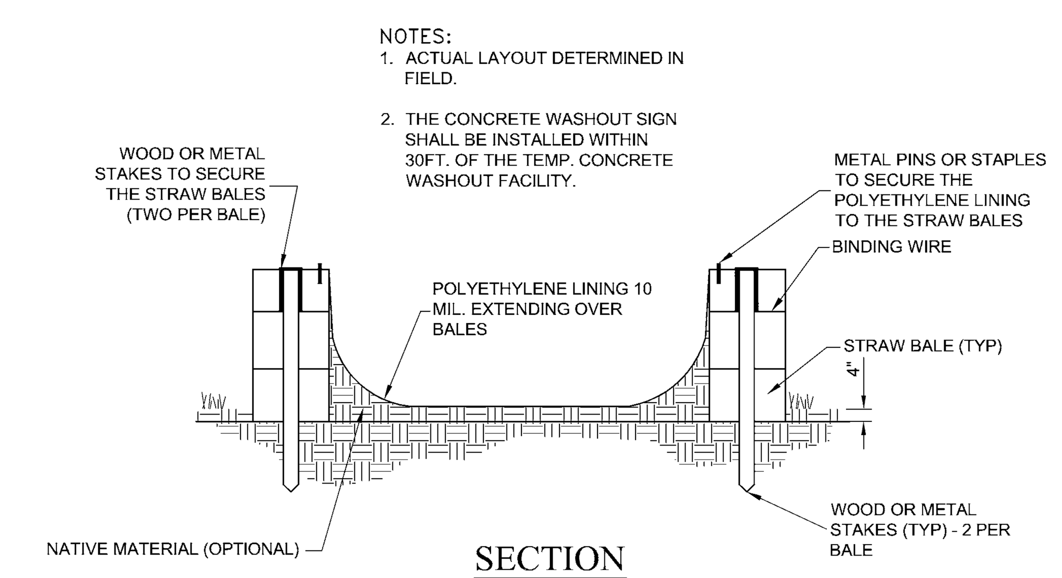

SECTION

ALTERNATE
CONTRACTOR MAY USE A 10 MIL. POLYETHYLENE LINED DUMPSTER FOR CONCRETE WASHOUT.

INSTALLATION
1. UTILIZE AND FOLLOW THE DESIGN IN THE STORM WATER POLLUTION PREVENTION PLAN TO INSTALL THE SYSTEM.
2. DEPENDENT UPON THE TYPE OF SYSTEM, EITHER EXCAVATE THE PIT OR INSTALL THE CONTAINMENT SYSTEM.
3. A BASE SHALL BE CONSTRUCTED AND PREPARED THAT IS FREE OF ROCKS AND OTHER DEBRIS THAT MAY CAUSE TEARS OR PUNCTURES IN THE POLYETHYLENE LINING.
4. INSTALL THE POLYETHYLENE LINING. FOR EXCAVATED SYSTEMS, THE LINING SHOULD EXTEND OVER THE ENTIRE EXCAVATION. THE LINING FOR BERMED SYSTEMS SHOULD BE INSTALLED OVER THE POOLING AREA WITH ENOUGH MATERIAL TO EXTEND THE LINING OVER THE BERM OR CONTAINMENT SYSTEM. THE LINING SHOULD BE SECURED WITH PINS, STAPLES, OR OTHER FASTENERS.
5. PLACE FLAGS, SAFETY FENCING, OR EQUIVALENT TO PROVIDE A BARRIER TO CONSTRUCTION EQUIPMENT AND OTHER TRAFFIC.
6. PLACE A NON-COLLAPSING, NON-WATER HOLDING COVER OVER THE WASHOUT FACILITY PRIOR TO A PREDICTED RAINFALL EVENT TO PREVENT ACCUMULATION OF WATER AND POSSIBLE OVERFLOW OF THE SYSTEM (OPTIONAL).
7. INSTALL SIGNAGE THAT IDENTIFIES CONCRETE WASHOUT AREAS.
8. POST SIGNS DIRECTING CONTRACTORS AND SUPPLIERS TO DESIGNATED LOCATIONS.
9. WHERE NECESSARY, PROVIDE STABLE INGRESS AND EGRESS (SEE TEMPORARY CONSTRUCTION INGRESS/EGRESS PAD ON PAGE 17) OR ALTERNATIVE APPROACH PAD FOR CONCRETE WASHOUT SYSTEMS.
10. USE A 10 MIL. POLYETHYLENE LINED DUMPSTER AS AN ALTERNATE.

CONCRETE WASHOUT

TYPE "ABOVE GRADE W/ STRAW BALES" (NO SCALE)

WEIHE ENGINEERS
Land Surveying | Civil Engineering
Landscape Architecture
10505 N. College Avenue
Indianapolis, Indiana 46280
weihe.net
317 | 846 - 6611
800 | 452 - 6408
317 | 843 - 0546 fax
ALLAN H. WEIHE, P.E., L.S. - FOUNDER

DATE	BY	PROJECT NO.: W14.0460
02.12.2015	BJS	DWG NAME: w140460-C104 swppp det.dwg
		DESIGNED BY: RLW/RAM
		DRAWN BY: RLW/RAM
		CHECKED BY: JKS
		DATE: 02.12.2015

REVISIONS AND ISSUES
SUBMITTED FOR INITIAL REVIEW

JAMES K. SHINNEMAN REGISTERED No. 10200392 STATE OF INDIANA PROFESSIONAL ENGINEER

JAMES K. SHINNEMAN P.E. 10200392

PREPARED FOR:
KROGER STORE J-979
KROGER MARKETPLACE - MALLORY PARKWAY AND U.S. 31
Part of the NE¼ of Section 15, Township 12 North, Range 4 East, Franklin Township, Johnson County, Indiana
SWPPP DETAILS

SHEET NO.
C1.08

PROJECT NO.
W14.0460

LOCATION: s:\2014\W140460\Engineering\design\const\w140460-C104 swppp det.dwg
LAYOUT: C1.08
DATE/TIME: February 12, 2015 – 7:28am
PLOTTED BY: schoeffb

INSTALLATION:
1. FILL BAGS APPROXIMATELY ONE–HALF FULL WITH WASHED GRAVEL OR AGGREGATE.
2. FOR INLETS LOCATED ON A SLOPE GRADIENT (SEE EXHIBIT 1):
   A. AT A POSITION(S) UP SLOPE OF THE INLET, LAY BAGS TIGHTLY IN A ROW CURVING UPSLOPE FROM THE INLET AND AWAY FROM THE CURB.
   B. OVERLAP BAGS ONTO THE CURB AND EXTEND A MINIMUM OF THREE FEET INTO THE STREET, KEEPING BAGS TIGHTLY ABUTTED TOGETHER.
   C. FOR ADDITIONAL LAYERS OF BAGS, OVERLAP THE BAGS WITH THE ROW BENEATH AND LEAVE A ONE–BAG GAP (AT OR BELOW CURB HEIGHT) IN THE MIDDLE OF THE TOP ROW TO SERVE AS A SPILLWAY. IF THE SPILLWAY HEIGHT IS HIGHER THAN THE TOP OF THE CURB, PLACE ADDITIONAL BAGS ALONG THE CURB TO PREVENT BYPASS FLOW.
   D. FOR ADDITIONAL STORAGE CAPACITY, CONSTRUCT A SERIES OF STONE BAG BARRIERS ALONG THE CURB SO EACH ONE TRAPS SMALL AMOUNTS OF SEDIMENT.
3. FOR INLETS LOCATED IN A DEPRESSIONAL (SUMP) POSITION (SEE EXHIBIT 2)
   A. PLACE BAGS IN AN ARC AROUND THE CURB INLET.
   B. OVERLAP BAGS ONTO THE CURB, KEEPING BAGS TIGHTLY ABUTTED TOGETHER.
   C. FOR ADDITIONAL LAYERS OF BAGS, OVERLAP THE BAGS WITH THE ROW BENEATH AND LEAVE A ONE–BAG GAP (AT OR BELOW CURB HEIGHT) IN THE MIDDLE OF THE TOP ROW TO SERVE AS A SPILLWAY. IF THE SPILLWAY HEIGHT IS HIGHER THAN THE TOP OF THE CURB, PLACE ADDITIONAL BAGS ALONG THE CURB TO PREVENT BYPASS FLOW.
4. PLACE A TRAFFIC BARRICADE AT EACH INSTALLED MEASURE FOR SAFETY AND TO PROTECT MEASURE INTEGRITY.

MAINTENANCE:
_ INSPECT DAILY.
_ REMOVE ACCUMULATED SEDIMENT FROM PAVED AREA (DO NOT FLUSH WITH WATER) AFTER EACH STORM EVENT. DEPOSIT SEDIMENT IN AN AREA WHERE IT WILL NOT RE–ENTER THE PAVED AREA OR STORM DRAINS.
_ INSPECT FOR DAMAGE BY VEHICULAR TRAFFIC AND REPAIR IF NEEDED.
_ WHEN CONTRIBUTING DRAINAGE AREA HAS BEEN STABILIZED, REMOVE SEDIMENT, PROPERLY DISPOSE OF ALL CONSTRUCTION MATERIAL, GRADE AREA TO THE ELEVATION OF THE STORM DRAIN INLET TOP, THEN STABILIZE IMMEDIATELY.

REFERENCE IN CHAPTER 7 PAGE 170–172 IN THE STORM WATER QUALITY MANUAL.

NOTE:
GRAVEL OR AGGREGATE MUST BE LARGER THAN STORM SEWER GRATE OPENING TO PREVENT IT FROM FALLING INTO THE STORM SEWER IN THE EVENT A BAG BREAKS.

NOTE:
IN SITUATIONS WITH NO WALK, PLACE SILT FENCE OR SILTSOCK BEHIND CURB INLET.

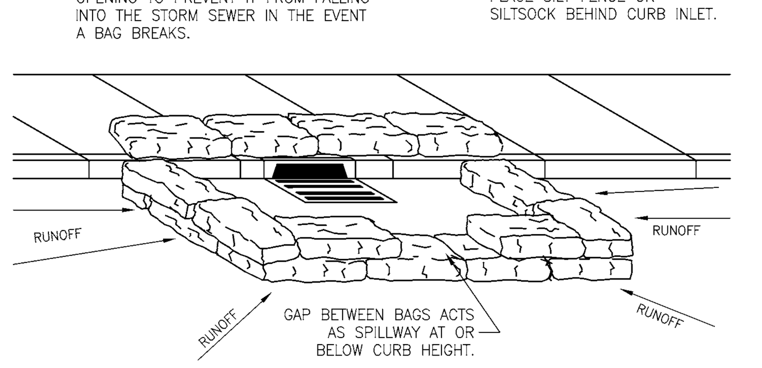

GRAVELBAG CURB INLET PROTECTION
FOR SAG INLETS LOCATIONS (NO SCALE)

INSTALLATION:
1. FILL BAGS APPROXIMATELY ONE–HALF FULL WITH WASHED GRAVEL OR AGGREGATE.
2. FOR INLETS LOCATED ON A SLOPE GRADIENT:
   A. AT A POSITION(S) UP SLOPE OF THE INLET, LAY BAGS TIGHTLY IN A ROW CURVING UP SLOPE FROM THE INLET AND AWAY FROM THE CURB.
   B. OVERLAP BAGS ONTO THE CURB AND EXTEND A MINIMUM OF THREE FEET INTO THE STREET, KEEPING BAGS TIGHTLY ABUTTED TOGETHER.
   C. FOR ADDITIONAL LAYERS OF BAGS, OVERLAP THE BAGS WITH THE ROW BENEATH AND LEAVE A ONE–BAG GAP (AT OR BELOW CURB HEIGHT) IN THE MIDDLE OF THE TOP ROW TO SERVE AS A SPILLWAY. IF THE SPILLWAY HEIGHT IS HIGHER THAN THE TOP OF THE CURB, PLACE ADDITIONAL BAGS ALONG THE CURB TO PREVENT BYPASS FLOW.
   D. FOR ADDITIONAL STORAGE CAPACITY, CONSTRUCT A SERIES OF STONE BAG BARRIERS ALONG THE CURB SO EACH ONE TRAPS SMALL AMOUNTS OF SEDIMENT.
3. FOR INLETS LOCATED IN A DEPRESSIONAL (SUMP) POSITION
   A. PLACE BAGS IN AN ARC AROUND THE CURB INLET.
   B. OVERLAP BAGS ONTO THE CURB, KEEPING BAGS TIGHTLY ABUTTED TOGETHER.
   C. FOR ADDITIONAL LAYERS OF BAGS, OVERLAP THE BAGS WITH THE ROW BENEATH AND LEAVE A ONE–BAG GAP (AT OR BELOW CURB HEIGHT) IN THE MIDDLE OF THE TOP ROW TO SERVE AS A SPILLWAY. IF THE SPILLWAY HEIGHT IS HIGHER THAN THE TOP OF THE CURB, PLACE ADDITIONAL BAGS ALONG THE CURB TO PREVENT BYPASS FLOW.
4. PLACE A TRAFFIC BARRICADE AT EACH INSTALLED MEASURE FOR SAFETY AND TO PROTECT MEASURE INTEGRITY.

MAINTENANCE:
_ INSPECT DAILY.
_ REMOVE ACCUMULATED SEDIMENT FROM PAVED AREA (DO NOT FLUSH WITH WATER) AFTER EACH STORM EVENT. DEPOSIT SEDIMENT IN AN AREA WHERE IT WILL NOT RE–ENTER THE PAVED AREA OR STORM DRAINS.
_ INSPECT FOR DAMAGE BY VEHICULAR TRAFFIC AND REPAIR IF NEEDED.
_ WHEN CONTRIBUTING DRAINAGE AREA HAS BEEN STABILIZED, REMOVE SEDIMENT, PROPERLY DISPOSE OF ALL CONSTRUCTION MATERIAL, GRADE AREA TO THE ELEVATION OF THE STORM DRAIN INLET TOP, THEN STABILIZE IMMEDIATELY.

REFERENCE IN CHAPTER 7 PAGE 170–172 IN THE INDIANA STORM WATER QUALITY MANUAL.

NOTE:
GRAVEL OR AGGREGATE MUST BE LARGER THAN STORM SEWER GRATE OPENING TO PREVENT IT FROM FALLING INTO THE STORM SEWER IN THE EVENT A BAG BREAKS.

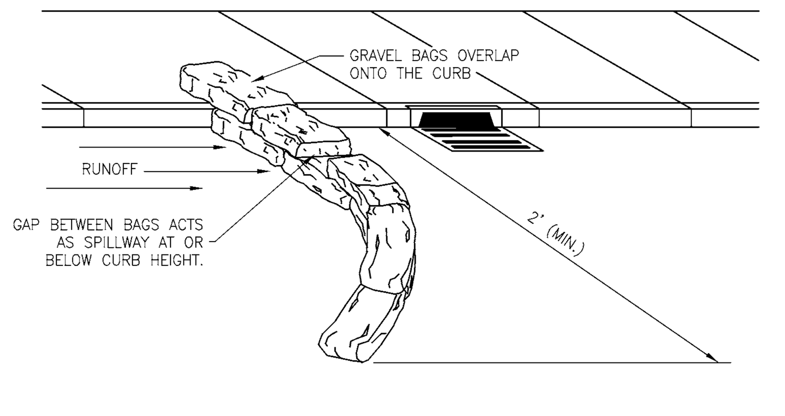

GRAVELBAG CURB INLET PROTECTION
FOR INLETS LOCATED ON GRADE (NO SCALE)

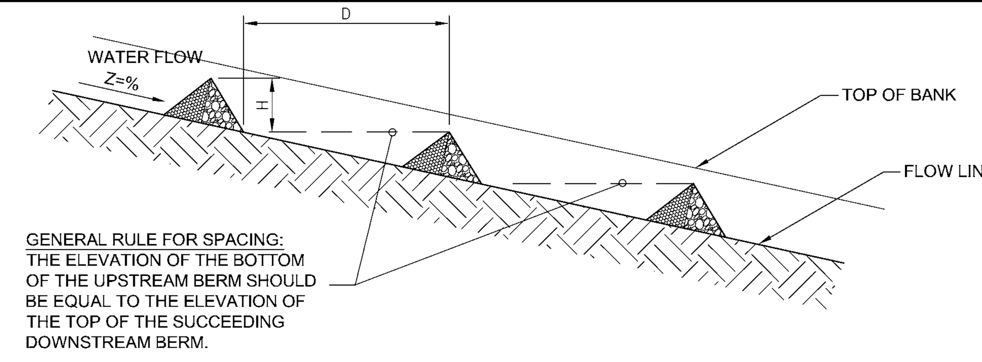

CHECK DAMS IN SWALE
2 ACRES OR LESS OF DRAINAGE AREA

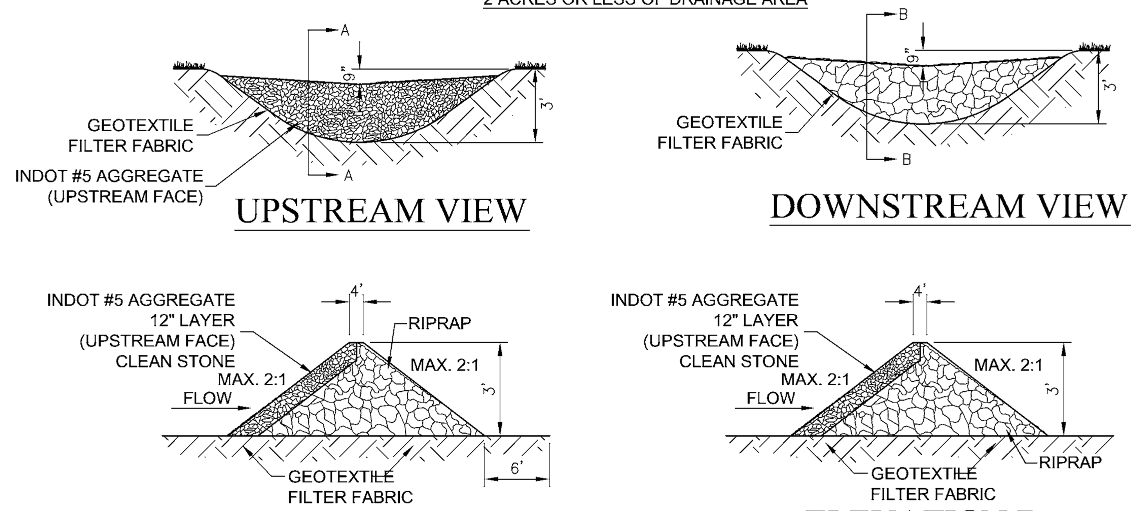

INSTALLATION
1. LAY OUT THE LOCATION OF THE CHECK DAM.
2. EXCAVATE A CUTOFF TRENCH INTO THE CHANNEL BOTTOM AND DITCH BANKS, EXTENDING IT A MINIMUM OF 18 INCHES BEYOND THE TOP OF THE DITCH BANK.
3. INSTALL AND ANCHOR FILTER FABRIC IN THE CHANNEL AND CUTOFF TRENCH.
4. PLACE RIPRAP IN THE CUTOFF TRENCH AND CHANNEL TO THE LINES AND DIMENSIONS SHOWN IN THE CONSTRUCTION PLANS. THE CENTER OF EACH DAM MUST BE AT LEAST NINE INCHES LOWER THAN THE UPPERMOST POINTS OF CONTACT BETWEEN THE RIPRAP DAM AND CHANNEL BANKS (SEE ROCK CHECK DAM WORKSHEET ON PAGE 101).
5. EXTEND THE RIPRAP AT LEAST 18 INCHES BEYOND THE TOP OF THE CHANNEL BANKS TO KEEP OVERFLOW WATER FROM ERODING AREAS ADJACENT TO THE CHANNEL BANKS BEFORE IT RE-ENTERS THE CHANNEL.
6. PLACE FILTER MEDIUM (INDOT CA NO. 5 AGGREGATE) ON THE UP-SLOPE SIDE OF THE DAM. PLACE FILTER MEDIUM OVER THE ENTIRE FACE OF THE DAM UP TO THE BASE OF THE OVERFLOW WEIR NOTCH.
7. STABILIZE THE CHANNEL ABOVE THE UPPERMOST DAM.
8. INSTALL AN EROSION-RESISTANT LINING IN THE CHANNEL BELOW THE LOWERMOST DAM. THE LINING SHOULD EXTEND A MINIMUM DISTANCE OF SIX FEET BELOW THE DAM.
9. ADDITIONAL SEDIMENT STORAGE CAN BE PROVIDED BY EXCAVATING A SMALL SEDIMENT TRAP ON THE UPSTREAM SIDE OF THE CHECK DAM.

MAINTENANCE
- INSPECT WITHIN 24 HOURS OF EACH RAIN EVENT AND AT LEAST ONCE EVERY SEVEN CALENDAR DAYS.
- IF SIGNIFICANT EROSION OCCURS BETWEEN DAMS, INSTALL AN EROSION-RESISTANT LINER IN THAT PORTION OF THE CHANNEL.
- REMOVE ACCUMULATED SEDIMENT WHEN IT REACHES ONE-HALF THE HEIGHT OF THE DAM TO MAINTAIN CHANNEL CAPACITY, ALLOW DRAINAGE THROUGH THE DAM, AND PREVENT LARGE FLOW FROM DISPLACING SEDIMENT.
- ADD RIPRAP AND AGGREGATE AS NEEDED TO MAINTAIN DESIGN HEIGHT AND CROSS SECTION OF THE DAMS.
- WHEN DAMS ARE NO LONGER NEEDED, REMOVE THE RIPRAP AND AGGREGATE AND STABILIZE THE CHANNEL, USING AN EROSION-RESISTANT LINING IF NECESSARY. (RIPRAP AND AGGREGATE FROM THE DAM MAY BE REMOVED OR UTILIZED TO STABILIZE THE CHANNEL.)

ROCK CHECK DAM
FOR SWALES AND DITCHES (NO SCALE)

NOTE
1. REFERENCED IN CHAPTER 7 PAGE 97 IN THE INDIANA STORM WATER QUALITY MANUAL.

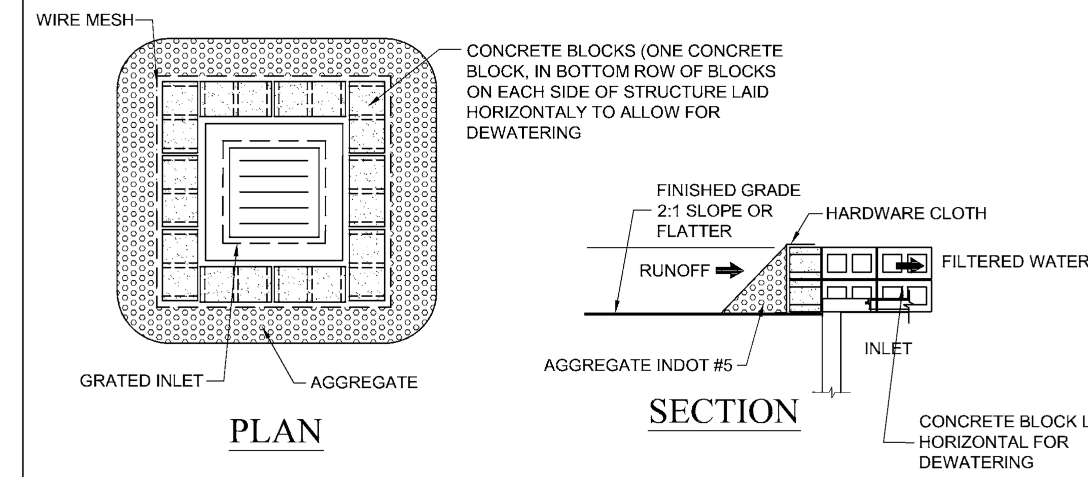

INSTALLATION
1. EXCAVATE THE FOUNDATION FOR THE CONCRETE BLOCKS ON LEVEL GRADE AND AT LEAST TWO INCHES BELOW THE TOP OF THE STORM DRAIN INLET.
2. PLACE THE BOTTOM ROW OF CONCRETE BLOCKS AROUND THE PERIMETER OF THE STORM DRAIN. LAY BLOCKS WITH OPENINGS FACING UP, ABUTTING THE BLOCKS FIRMLY TOGETHER AND OVERLAPPING THE CORNERS.
3. IF NECESSARY, SUPPORT THE BLOCKS BY DRIVING SHARPENED 2 X 4 INCH WOOD STUDS OR REBAR (NOT MORTAR) THROUGH THE BLOCK OPENINGS AND INTO THE UNDERLYING SOIL.
4. ON EACH SIDE OF THE BOTTOM ROW, TURN ONE CONCRETE BLOCK WITH ITS OPENINGS FACING HORIZONTALLY TO ALLOW FOR DEWATERING.
5. PLACE HARDWARE CLOTH OVER THE OPENINGS TO HOLD THE AGGREGATE IN PLACE.
6. PLACE THE FILTER MEDIUM (INDOT CA NO. 5 AGGREGATE) AROUND THE OUTSIDE OF THE CONCRETE BLOCKS TO CONTROL DRAINAGE RATE; LIMIT FILTER MEDIUM SIDE SLOPES TO 2:1 RATIO OR FLATTER.

NOTE: IN SITUATIONS WHERE STORM WATER MAY BYPASS THE STRUCTURE, EITHER:
_ SET THE TOP OF THE CONCRETE BLOCKS AT LEAST SIX INCHES LOWER THAN THE GROUND ELEVATION ON THE DOWN-SLOPE SIDE OF THE STORM DRAIN INLET,
_ BUILD A TEMPORARY DIKE, COMPACTED TO SIX INCHES HIGHER THAN THE CONCRETE BLOCKS, ON THE DOWN-SLOPE SIDE OF THE STORM DRAIN INLET, AND/OR
_ USE IN CONJUNCTION WITH EXCAVATED DROP INLET PROTECTION (SEE EXCAVATED DROP INLET PROTECTION ON PAGE 145).

MAINTENANCE
_ INSPECT DAILY.
_ REMOVE SEDIMENT AND DEBRIS AND MAKE NEEDED REPAIRS IMMEDIATELY.
_ WHEN THE CONTRIBUTING DRAINAGE AREA HAS BEEN STABILIZED, REMOVE AND PROPERLY DISPOSE OF ALL CONSTRUCTION MATERIAL AND SEDIMENT, THEN STABILIZE.

REFERENCED IN CHAPTER 7 PAGE 163 TO 166 IN THE INDIANA STORM WATER QUALITY MANUAL.

BLOCK AND AGGREGATE INLET SEDIMENT DEVICE
(NO SCALE)

DANDY BAG ®

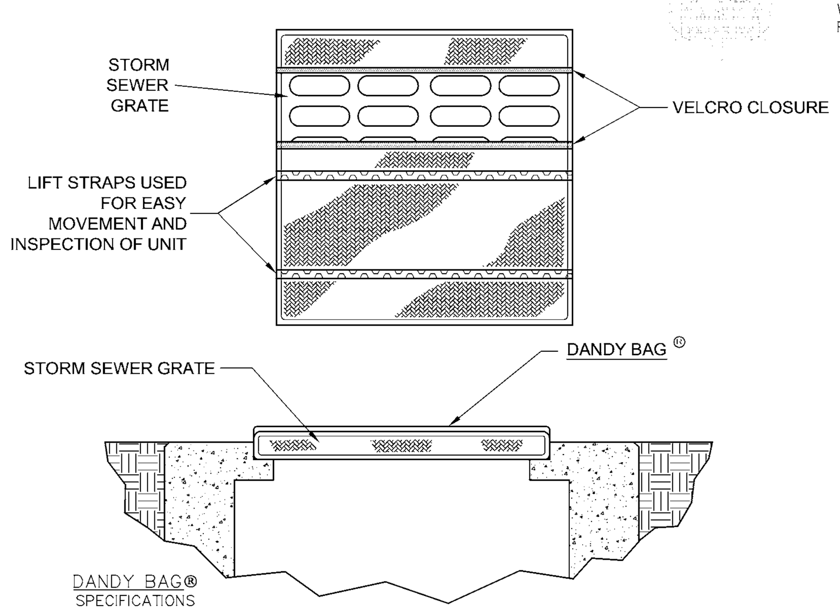

NOTE:
THE DANDY BAG® WILL BE **MANUFACTURED IN THE U.S.A.** FROM A WOVEN MONOFILAMENT FABRIC THAT MEETS OR EXCEEDS THE FOLLOWING SPECIFICATIONS:

HI–FLOW DANDY BAG® (SAFETY ORANGE)

Mechanical Properties	Test Method	Units	MARV
Grab Tensile Strength	ASTM D 4632	kN (lbs)	1.62 (365) X 0.89 (200)
Grab Tensile Elongation	ASTM D 4632	%	24 X 10
Puncture Strength	ASTM D 4833	kN (lbs)	0.40 (90)
Mullen Burst Strength	ASTM D 3786	kPa (psi)	3097 (450)
Trapezoid Tear Strength	ASTM D 4533	kN (lbs)	0.51 (115) X 0.33 (75)
UV Resistence	ASTM D 4355	%	90
Apparent Opening Size	ASTM D 4751	Mm (US Std Sieve)	0.425 (40)
Flow Rate	ASTM D 4491	$1/min/m^2$ ($gal/min/ft^2$)	5907 (145)
Permittivity	ASTM D 4491	Sec^{-1}	2.1

*Note: All Dandy Bags® can be ordered with our optional oil absorbent pillows

DETAIL OF INLET SEDIMENT CONTROL DEVICE
(NO SCALE)

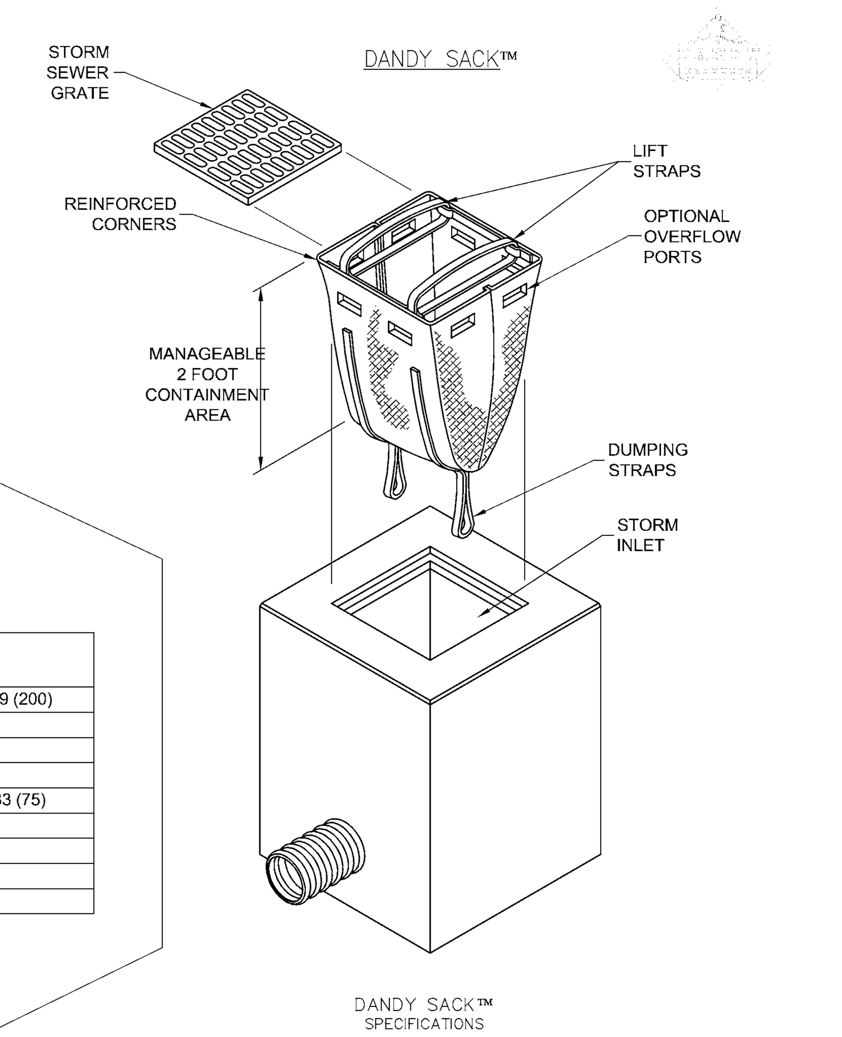

DANDY SACK™
SPECIFICATIONS

NOTE: THE DANDY SACK™ WILL BE **MANUFACTURED IN THE U.S.A.** FROM A WOVEN MONOFILAMENT FABRIC THAT MEETS OR EXCEEDS THE FOLLOWING SPECIFICATIONS:

REGULAR FLOW DANDY SACK™ (BLACK)

Mechanical Properties	Test Method	Units	MARV
Grab Tensile Strength	ASTM D 4632	kN (lbs)	1.78 (400) x 1.40 (315)
Grab Tensile Elongation	ASTM D 4632	%	15 x 15
Puncture Strength	ASTM D 4833	kN (lbs)	0.67 (150)
Mullen Burst Strength	ASTM D 3786	kPa (psi)	5506 (800)
Trapezoid Tear Strength	ASTM D 4533	kN (lbs)	0.67 (150) x 0.73 (165)
UV Resistence	ASTM D 4355	%	90
Apparent Opening Size	ASTM D 4751	Mm (US Std Sieve)	0.425 (40)
Flow Rate	ASTM D 4491	$1/min/m^2$ ($gal/min/ft^2$)	2852 (70)
Permittivity	ASTM D 4491	Sec^{-1}	0.90

*Note: All Dandy Sacks™ can be ordered with our optional oil absorbent pillows

HI–FLOW DANDY SACK™ (SAFETY ORANGE)

Mechanical Properties	Test Method	Units	MARV
Grab Tensile Strength	ASTM D 4632	kN (lbs)	1.62 (365) X 0.89 (200)
Grab Tensile Elongation	ASTM D 4632	%	24 X 10
Puncture Strength	ASTM D 4833	kN (lbs)	0.40 (90)
Mullen Burst Strength	ASTM D 3786	kPa (psi)	3097 (450)
Trapezoid Tear Strength	ASTM D 4533	kN (lbs)	0.51 (115) X 0.33 (75)
UV Resistence	ASTM D 4355	%	90
Apparent Opening Size	ASTM D 4751	Mm (US Std Sieve)	0.425 (40)
Flow Rate	ASTM D 4491	$1/min/m^2$ ($gal/min/ft^2$)	5907 (145)
Permittivity	ASTM D 4491	Sec^{-1}	2.1

DETAIL OF INLET SEDIMENT CONTROL DEVICE
(NO SCALE)

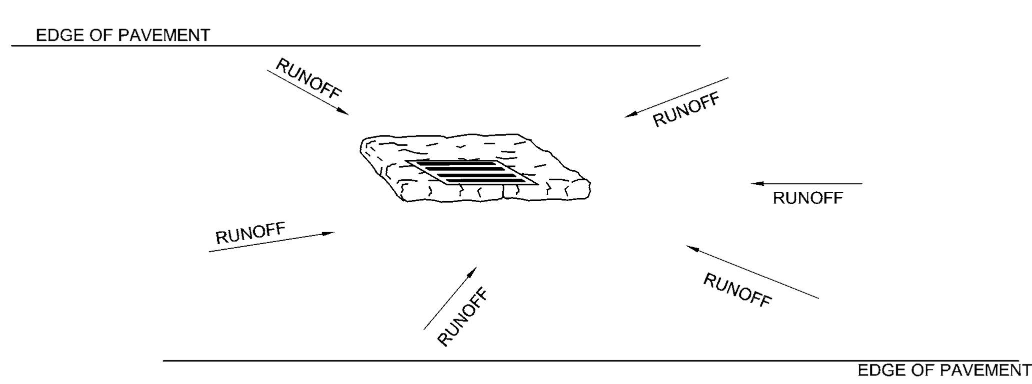

MAINTENANCE
- INSPECT DAILY.
- REMOVE ACCUMULATED SEDIMENT FROM PAVED AREA (DO NOT FLUSH WITH WATER) AFTER EACH STORM EVENT. DEPOSIT SEDIMENT IN AN AREA WHERE IT WILL NOT RE-ENTER THE PAVED AREA OR STORM DRAINS.
- INSPECT FOR DAMAGE BY VEHICULAR TRAFFIC AND REPAIR IF NEEDED.
_ WHEN CONTRIBUTING DRAINAGE AREA HAS BEEN STABILIZED, REMOVE SEDIMENT, PROPERLY DISPOSE OF ALL CONSTRUCTION MATERIAL, GRADE AREA TO THE ELEVATION OF THE STORM DRAIN INLET TOP, THEN STABILIZE IMMEDIATELY.

COCONUT MAT INLET PROTECTION
FOR SAG INLETS LOCATIONS (NO SCALE)

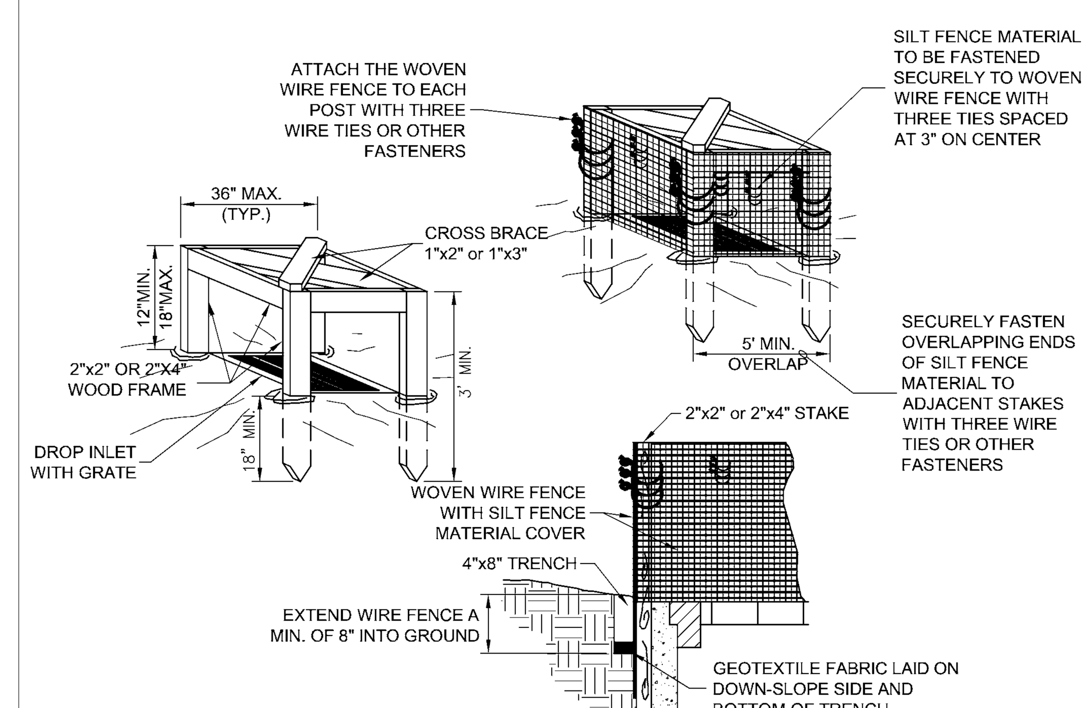

POSTS: 2 X 4 WOODEN STAKE
FENCE: WOVEN WIRE, 14-1/2 GA., 6" MAX. MESH OPENING
FABRIC: IN ACCORDANCE WITH ASTM D 6461 LATEST EDITION.

INSTALLATION
1. DIG AN EIGHT-INCH DEEP, FOUR-INCH WIDE TRENCH AROUND THE PERIMETER OF THE INLET.
2. IF USING PRE-ASSEMBLED GEOTEXTILE FABRIC AND POSTS, DRIVE THE POSTS INTO THE SOIL, TIGHTLY STRETCHING THE GEOTEXTILE FABRIC BETWEEN POSTS AS EACH IS DRIVEN. (POSTS MUST BE PLACED ON THE INLET SIDE OF THE ANCHOR TRENCH WITH THE GEOTEXTILE FABRIC ON THE SIDE OF THE TRENCH FARTHEST FROM THE INLET.)

NOTE: IF ASSEMBLING THE GEOTEXTILE FABRIC AND POSTS ON-SITE, DRIVE THE POSTS INTO THE SOIL AND THEN SECURE THE GEOTEXTILE FABRIC TO THE POSTS BY PLACING A PIECE OF LATHE OVER THE FABRIC AND FASTENING IT TO THE POST (STRETCHING THE FABRIC BETWEEN POSTS AS IT IS FASTENED).

3. USE THE WRAP JOIN METHOD WHEN JOINING POSTS.
4. PLACE THE BOTTOM 12 INCHES OF GEOTEXTILE FABRIC INTO THE EIGHT-INCH DEEP TRENCH, LAYING THE REMAINING FOUR INCHES IN THE BOTTOM OF THE TRENCH AND EXTENDING AWAY FROM THE INLET.
5. BACKFILL THE TRENCH WITH SOIL MATERIAL AND COMPACT IT IN PLACE.
6. BRACE THE POSTS BY NAILING BRACES INTO EACH CORNER POST OR UTILIZE RIGID PANELS TO SUPPORT FABRIC.

NOTE: IN SITUATIONS WHERE STORM WATER MAY BYPASS THE STRUCTURE, EITHER: SET THE TOP OF THE GEOTEXTILE FABRIC FILTER AT LEAST SIX INCHES LOWER THAN THE GROUND ELEVATION ON THE DOWN-SLOPE SIDE OF THE STORM DRAIN INLET, BUILD A TEMPORARY DIKE, COMPACTED TO SIX INCHES HIGHER THAN THE FABRIC, ON THE DOWN-SLOPE SIDE OF THE STORM DRAIN INLET, AND/OR USE IN CONJUNCTION WITH EXCAVATED DROP INLET PROTECTION.

MAINTENANCE
_ INSPECT DAILY.
_ INSPECT GEOTEXTILE FABRIC AND MAKE NEEDED REPAIRS IMMEDIATELY.
_ REMOVE SEDIMENT FROM POOL AREA TO PROVIDE STORAGE FOR THE NEXT STORM EVENT. AVOID DAMAGING OR UNDERCUTTING FABRIC DURING SEDIMENT REMOVAL.
_ WHEN CONTRIBUTING DRAINAGE AREA HAS BEEN STABILIZED, REMOVE SEDIMENT, PROPERLY DISPOSE OF ALL CONSTRUCTION MATERIAL, GRADE AREA TO THE ELEVATION OF THE STORM DRAIN INLET TOP, THEN STABILIZE IMMEDIATELY.

REFERENCED IN CHAPTER 7 PAGE 153-157 IN THE INDIANA STORM WATER QUALITY MANUAL.

SILT FENCE INLET PROTECTION
FOR NON PAVED AREAS (NO SCALE)

NOTE:
1) INSTALL, DEWATER, AND MAINTAIN PER MANUFACTURER'S SPECIFICATIONS.
2) DETAIL PER PENNSYLVANIA EROSION AND SEDIMENTATION CONTROL MANUAL, MARCH 2000 ISSUE.
3) CEG TO SPECIFY SEDIMENT SKIMMER.

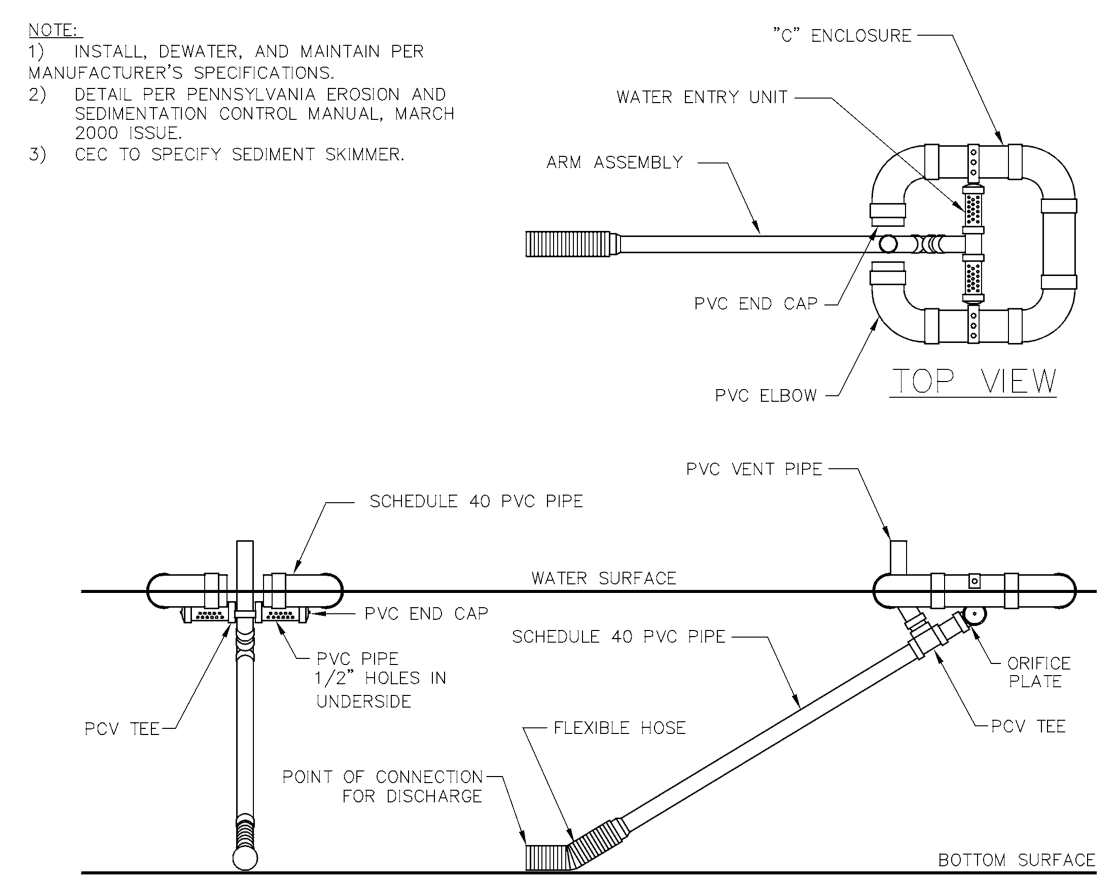

TEMPORARY POND SKIMMER
(NO SCALE)

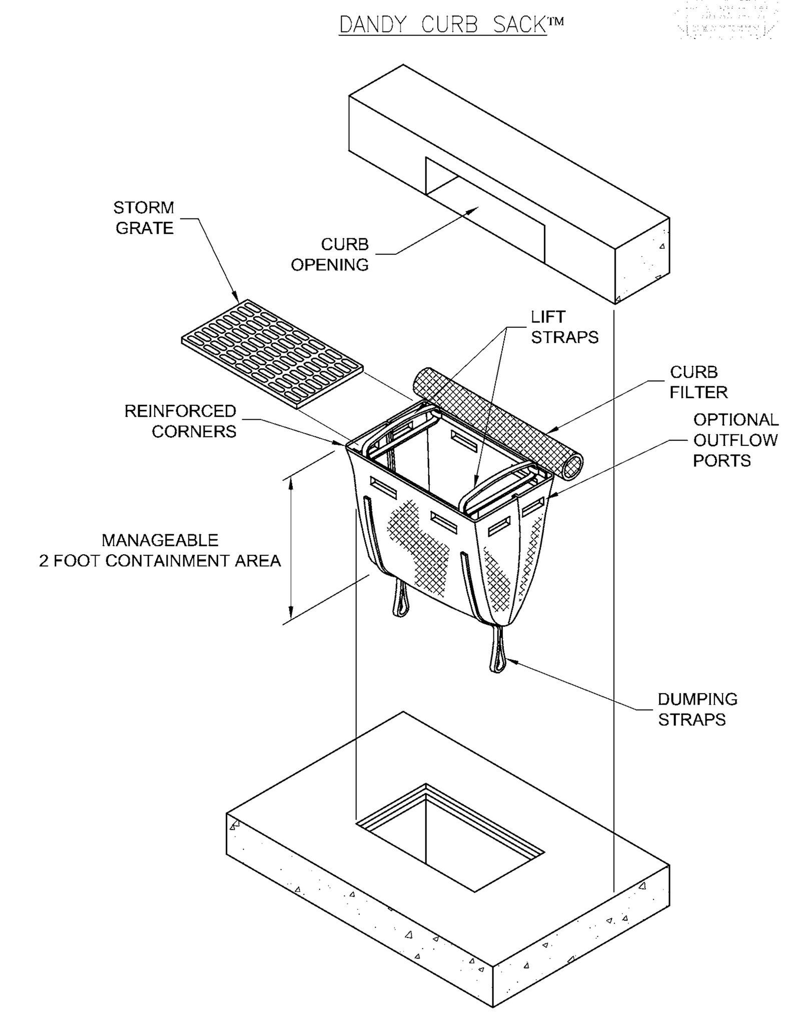

DANDY CURB SACK™
SPECIFICATIONS

NOTE: THE DANDY CURB SACK™ WILL BE **MANUFACTURED IN THE U.S.A.** FROM A WOVEN MONOFILAMENT FABRIC THAT MEETS OR EXCEEDS THE FOLLOWING SPECIFICATIONS:

REGULAR FLOW DANDY CURB SACK™ (BLACK)

Mechanical Properties	Test Method	Units	MARV
Grab Tensile Strength	ASTM D 4632	kN (lbs)	1.78 (400) x 1.40 (315)
Grab Tensile Elongation	ASTM D 4632	%	15 x 15
Puncture Strength	ASTM D 4833	kN (lbs)	0.67 (150)
Mullen Burst Strength	ASTM D 3786	kPa (psi)	5506 (800)
Trapezoid Tear Strength	ASTM D 4533	kN (lbs)	0.67 (150) x 0.73 (165)
UV Resistence	ASTM D 4355	%	90
Apparent Opening Size	ASTM D 4751	Mm (US Std Sieve)	0.425 (40)
Flow Rate	ASTM D 4491	$1/min/m^2$ ($gal/min/ft^2$)	2852 (70)
Permittivity	ASTM D 4491	Sec^{-1}	0.90

HI–FLOW DANDY CURB SACK™ (SAFETY ORANGE)

Mechanical Properties	Test Method	Units	MARV
Grab Tensile Strength	ASTM D 4632	kN (lbs)	1.62 (365) X 0.89 (200)
Grab Tensile Elongation	ASTM D 4632	%	24 X 10
Puncture Strength	ASTM D 4833	kN (lbs)	0.40 (90)
Mullen Burst Strength	ASTM D 3786	kPa (psi)	3097 (450)
Trapezoid Tear Strength	ASTM D 4533	kN (lbs)	0.51 (115) X 0.33 (75)
UV Resistence	ASTM D 4355	%	90
Apparent Opening Size	ASTM D 4751	Mm (US Std Sieve)	0.425 (40)
Flow Rate	ASTM D 4491	$1/min/m^2$ ($gal/min/ft^2$)	5907 (145)
Permittivity	ASTM D 4491	Sec^{-1}	2.1

*Note: All Dandy Sacks™ can be ordered with our optional oil absorbent pillows

DETAIL OF INLET SEDIMENT CONTROL DEVICE WITH CURB FILTER
(NO SCALE)

WEIHE ENGINEERS
Land Surveying | Civil Engineering
Landscape Architecture
10505 N. College Avenue
Indianapolis, Indiana 46280
weihe.net
317 846 - 6611
800 452 - 6408
317 843 - 0546 fax
ALLAN H. WEIHE, P.E., L.S. - FOUNDER

PROJECT NO.: W14.0460
DWG NAME: w140460-C104 swppp det.dwg
DESIGNED BY: RLW/RAM
DRAWN BY: RLW/RAM
CHECKED BY: JAS
DATE: 02.12.2015

DATE	BY	REVISIONS AND ISSUES
02.12.2015	BJS	SUBMITTED FOR INITIAL REVIEW

JAMES K. SHINNEMAN REGISTERED No. 10200392 STATE OF INDIANA PROFESSIONAL ENGINEER
JAMES K. SHINNEMAN P.E. 10200392

PREPARED FOR:
KROGER STORE J-979
KROGER MARKETPLACE - MALLORY PARKWAY AND U.S. 31
SWPPP DETAILS
Part of the NE¼ of Section 15, Township 12 North, Range 4 East, Franklin Township, Johnson County, Indiana

SHEET NO.
C1.09
PROJECT NO.
W14.0460