HETSCO, INC.

NE 1/4 & SE 1/4 SEC. 11 - T12N - R4E, CITY OF FRANKLIN, JOHNSON COUNTY, INDIANA
ADDRESS: 1725 N. GRAHAM ROAD
ZONED: IG

PROJECT APPLICANT/OWNER
RUNNEBOHM CONSTRUCTION
144 EAST RAMPART STREET
SHELBYVILLE, IN 46176
317-398-4722
317-536-0015
EMAIL: miker@runnebohm.com
CONTACT: MIKE RUNNEBOHM

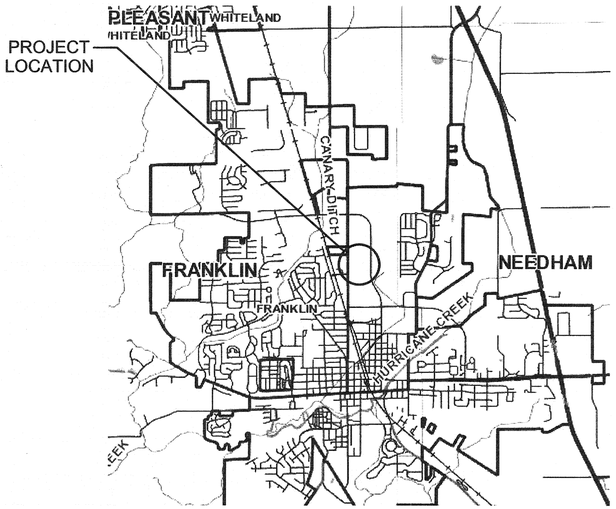

VICINITY MAP
NO SCALE

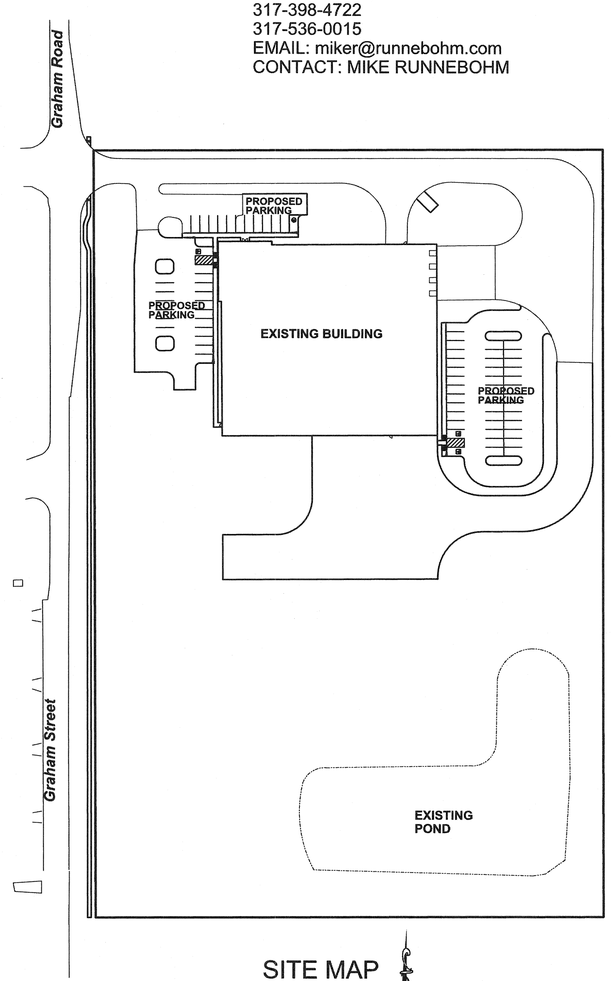

SITE MAP
SCALE: 1" = 80'

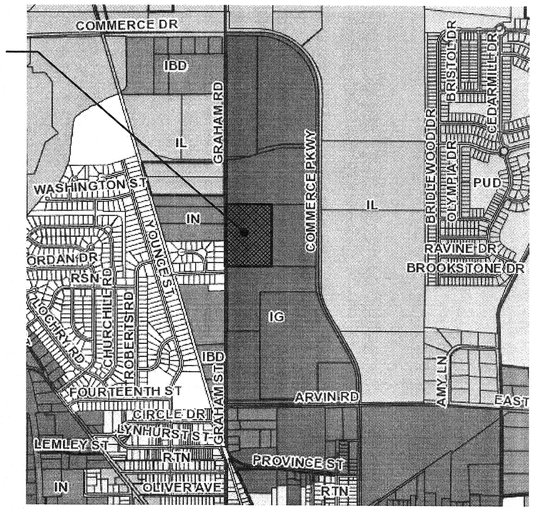

ZONING VICINITY MAP
NO SCALE

Project Summary

This project proposes is to add parking lots (71 spaces) and asphalt pavement to an existing building. The existing drainage will be utilized for the proposed pavement areas. Zoning Ordinance maximum impervious coverage of 85%

OPERATING AUTHORITIES

GAS
Vectren
600 Industrial Drive
Franklin, IN 46131
317-736-2986

CABLE TELEVISION
Comcast
5330 East 65th Street
Indianapolis, IN 46220
317-447-9934

WATER
Indiana American Water
555 East County Line Road, Suite 201
Greenwood, IN 46143
317-881-0270

ELECTRIC
Duke Energy
2515 N. Morton Street
Franklin, IN 46131
317-517-3103

ELECTRIC
Johnson County REMC
P.O. Box 309
Franklin, IN 46131
317-736-6147

TELEPHONE
CenturyLink
1147 N. Morton Street
Franklin, IN 46131
317-736-6630

SANITARY
Franklin DPW
796 South State Street
Franklin, IN 46131
317-736-6709

STORM
Franklin DPW
796 South State Street
Franklin, IN 46131
888-736-3640

FIRE DEPARTMENT
Franklin Fire Department
1800 Thornburg Lane
Franklin, IN 46131
317-736-8967

SCHOOL DISTRICT
Franklin Community Schools
908 Grizzly Cub Drive
Franklin, IN 46131
317-736-5800

PLANS PREPARED BY:
BANNING ENGINEERING
853 COLUMBIA ROAD, SUITE #101
PLAINFIELD, IN 46168
BUS: (317) 707-3700, FAX: (317) 707-3800
E-MAIL: Banning@BanningEngineering.com
WEB: www.BanningEngineering.com
CONTACT: RYAN LINDLEY

CONSTRUCTION DOCUMENTS

PROJECT MANAGER:_____ DATE:_____

THESE PLANS ARE NOT TO BE CONSIDERED FINAL OR TO BE UTILIZED FOR CONSTRUCTION UNLESS SIGNED AND DATED BY THE APPROPRIATE BANNING ENGINEERING PROJECT MANAGER.

THESE PLANS ARE NOT INTENDED TO BE REPRESENTED AS A RETRACEMENT OR ORIGINAL BOUNDARY SURVEY, A ROUTE SURVEY, OR A SURVEYOR LOCATION REPORT.

WALTER F. REEDER III
REGISTERED
PE 60017777
STATE OF INDIANA
PROFESSIONAL ENGINEER

CERTIFIED BY: Walter F. Reeder III
10/15/14

REVISIONS

NUMBER	DESCRIPTION	DATE

SHEET INDEX

SHEET NO	DESCRIPTION
C100	TITLE SHEET
C101	PROPERTY SURVEY
C102	SITE LAYOUT PLAN
C110	GRADING, DRAINAGE AND UTILITY PLAN
C400	INITIAL EROSION CONTROL
C401	FINAL EROSION CONTROL
C402	STORM WATER POLLUTION PREVENTION PLAN (SWPPP)
C500	EROSION CONTROL DETAILS
C501	MISCELLANEOUS DETAILS
C502	STORM SEWER DETAILS
L100	LANDSCAPE PLAN

Indiana 811
Know what's below. Call before you dig.

Date: 10-16-14
Project No: 11191H
Sheet No: C100

HETSCO, INC.

File Name: 11191H_ctl.dgn
Folder: Sheets
Project Number: 11191H
01/15/2014
CALE: 80.0000 ' / in.

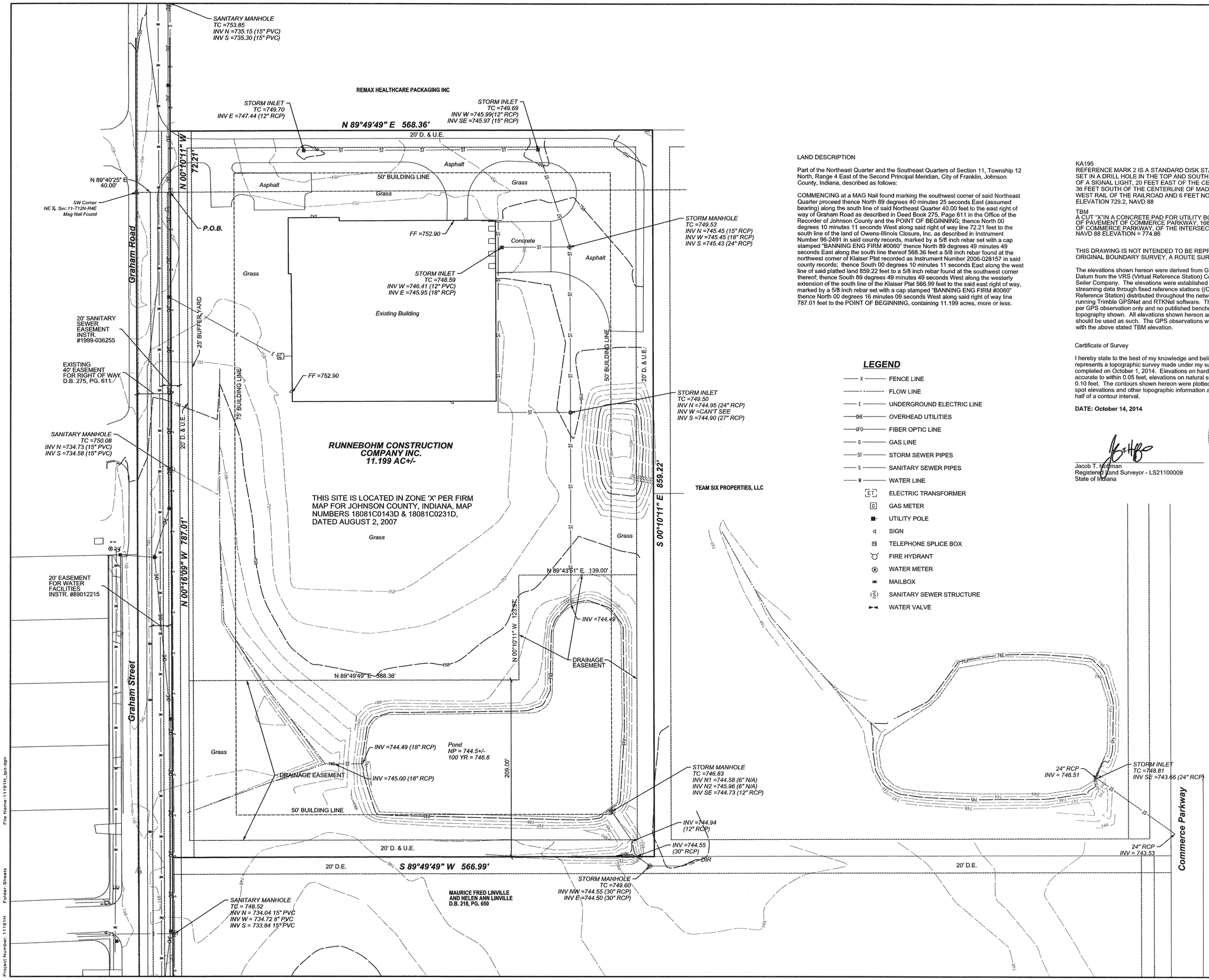

LAND DESCRIPTION

Part of the Northeast Quarter and the Southeast Quarters of Section 11, Township 12 North, Range 4 East of the Second Principal Meridian, City of Franklin, Johnson County, Indiana, described as follows:

COMMENCING at a MAG Nail found marking the southwest corner of said Northeast Quarter proceed thence North 89 degrees 40 minutes 25 seconds East (assumed bearing) along the south line of said Northeast Quarter 40.00 feet to the east right of way of Graham Road as described in Deed Book 275, Page 611 in the Office of the Recorder of Johnson County and the POINT OF BEGINNING; thence North 00 degrees 10 minutes 11 seconds West along said right of way line 72.21 feet to the south line of the land of Owens-Illinois Closure, Inc. as described in Instrument Number 96-2491 in said county records, marked by a 5/8 inch rebar set with a cap stamped "BANNING ENG FIRM #0060" thence North 89 degrees 49 minutes 49 seconds East along the south line thereof 568.36 feet a 5/8 inch rebar found at the northwest corner of Klaiser Plat recorded as Instrument Number 2006-028157 in said county records; thence South 00 degrees 10 minutes 11 seconds East along the west line of said platted land 859.22 feet to a 5/8 inch rebar found at the southwest corner thereof; thence South 89 degrees 49 minutes 49 seconds West along the westerly extension of the south line of the Klaiser Plat 566.99 feet to the said east right of way, marked by a 5/8 inch rebar set with a cap stamped "BANNING ENG FIRM #0060" thence North 00 degrees 16 minutes 09 seconds West along said right of way line 787.01 feet to the POINT OF BEGINNING, containing 11.199 acres, more or less.

LEGEND

- FENCE LINE
- FLOW LINE
- UNDERGROUND ELECTRIC LINE
- OVERHEAD UTILITIES
- FIBER OPTIC LINE
- GAS LINE
- STORM SEWER PIPES
- SANITARY SEWER PIPES
- WATER LINE
- ELECTRIC TRANSFORMER
- GAS METER
- UTILITY POLE
- SIGN
- TELEPHONE SPLICE BOX
- FIRE HYDRANT
- WATER METER
- MAILBOX
- SANITARY SEWER STRUCTURE
- WATER VALVE

KA195
REFERENCE MARK 2 IS A STANDARD DISK STAMPED FRANKLIN 1920 NO 2 1974 SET IN A DRILL HOLE IN THE TOP AND SOUTH EDGE OF THE CONCRETE BASE OF A SIGNAL LIGHT, 20 FEET EAST OF THE CENTERLINE OF CROWELL ST., 36 FEET SOUTH OF THE CENTERLINE OF MADISON ST., 59 FEET WEST OF THE WEST RAIL OF THE RAILROAD AND 6 FEET NORTHWEST OF THE MAPLE TREE
ELEVATION 729.2, NAVD 88

TBM
A CUT "X" IN A CONCRETE PAD FOR UTILITY BOXES 54 FEET WEST OF THE WEST EDGE OF PAVEMENT OF COMMERCE PARKWAY, 1667 FEET NORTH, ALONG THE MEANDERINGS OF COMMERCE PARKWAY, OF THE INTERSECTION WITH ARVIN DRIVE.
NAVD 88 ELEVATION = 774.86

THIS DRAWING IS NOT INTENDED TO BE REPRESENTED AS A RETRACEMENT OR ORIGINAL BOUNDARY SURVEY, A ROUTE SURVEY, OR A SURVEYOR LOCATION REPORT.

The elevations shown hereon were derived from GPS observation using NAVD 88 Datum from the VRS (Virtual Reference Station) Control Network established by Seiler Company. The elevations were established for this network by continuously streaming data through fixed reference stations ((CORS)-Continuously Operating Reference Station) distributed throughout the network area to a central server running Trimble GPSNet and RTKNet software. The elevations shown hereon are per GPS observation only and no published benchmarks were located for the topography shown. All elevations shown hereon are relative to each other and should be used as such. The GPS observations were found to be in compliance with the above stated TBM elevation.

Certificate of Survey

I hereby state to the best of my knowledge and belief that the within plat represents a topographic survey made under my supervision with the field data completed on October 1, 2014. Elevations on hard surfaces or structures are accurate to within 0.05 feet, elevations on natural surfaces are accurate to within 0.10 feet. The contours shown hereon were plotted based upon interpolation of spot elevations and other topographic information and are accurate to within one half of a contour interval.

DATE: October 14, 2014

Jacob T. Hoffman
Registered Land Surveyor - LS21100009
State of Indiana

JACOB T. HOFFMAN REGISTERED No. LS21100009 STATE OF INDIANA LAND SURVEYOR

Sym.	Revisions	Date

Designed: RRL
Drawn: SJH
Checked:
Scale: 1" = 50'
Date: 10-16-14

PROPERTY SURVEY
HETSCO, INC.
CITY OF FRANKLIN
JOHNSON COUNTY, INDIANA

BANNING ENGINEERING
853 COLUMBIA ROAD, SUITE #101
PLAINFIELD, IN 46168
BUS: (317) 707-3700, FAX: (317) 707-3800
E-MAIL: Banning@BanningEngineering.com
WEB: www.BanningEngineering.com

Project No: 11191H
Sheet No: C101

File Name:11191H_bp.dgn
Folder Sheets
10/15/2014
SCALE: 50.0000 ' / in.
Project Number: 11191H

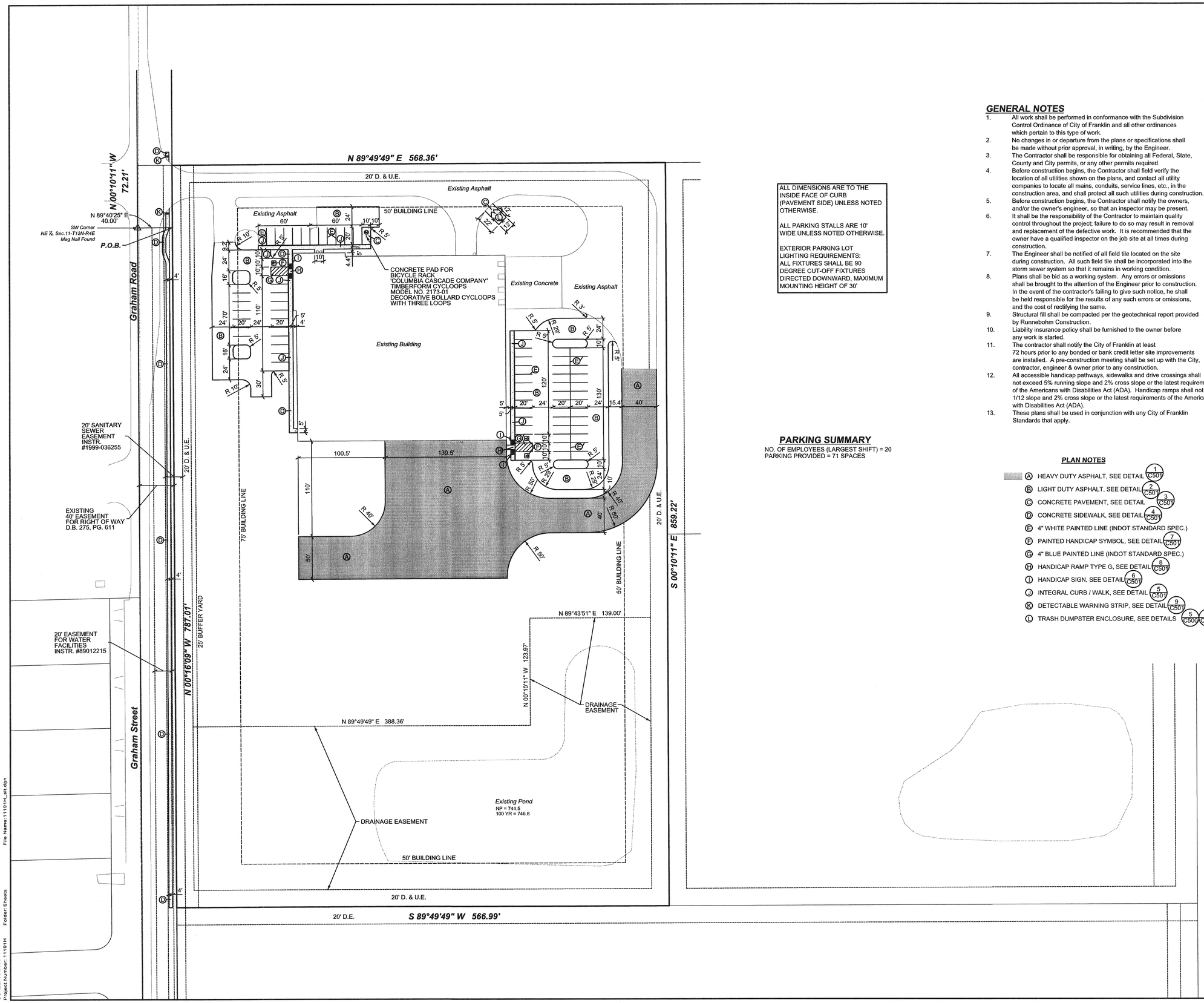

ALL DIMENSIONS ARE TO THE INSIDE FACE OF CURB (PAVEMENT SIDE) UNLESS NOTED OTHERWISE.

ALL PARKING STALLS ARE 10' WIDE UNLESS NOTED OTHERWISE.

EXTERIOR PARKING LOT LIGHTING REQUIREMENTS: ALL FIXTURES SHALL BE 90 DEGREE CUT-OFF FIXTURES DIRECTED DOWNWARD, MAXIMUM MOUNTING HEIGHT OF 30'

PARKING SUMMARY

NO. OF EMPLOYEES (LARGEST SHIFT) = 20
PARKING PROVIDED = 71 SPACES

GENERAL NOTES

1. All work shall be performed in conformance with the Subdivision Control Ordinance of City of Franklin and all other ordinances which pertain to this type of work.
2. No changes in or departure from the plans or specifications shall be made without prior approval, in writing, by the Engineer.
3. The Contractor shall be responsible for obtaining all Federal, State, County and City permits, or any other permits required.
4. Before construction begins, the Contractor shall field verify the location of all utilities shown on the plans, and contact all utility companies to locate all mains, conduits, service lines, etc., in the construction area, and shall protect all such utilities during construction.
5. Before construction begins, the Contractor shall notify the owners, and/or the owner's engineer, so that an inspector may be present.
6. It shall be the responsibility of the Contractor to maintain quality control throughout the project; failure to do so may result in removal and replacement of the defective work. It is recommended that the owner have a qualified inspector on the job site at all times during construction.
7. The Engineer shall be notified of all field tile located on the site during construction. All such field tile shall be incorporated into the storm sewer system so that it remains in working condition.
8. Plans shall be bid as a working system. Any errors or omissions shall be brought to the attention of the Engineer prior to construction. In the event of the contractor's failing to give such notice, he shall be held responsible for the results of any such errors or omissions, and the cost of rectifying the same.
9. Structural fill shall be compacted per the geotechnical report provided by Runnebohm Construction.
10. Liability insurance policy shall be furnished to the owner before any work is started.
11. The contractor shall notify the City of Franklin at least 72 hours prior to any bonded or bank credit letter site improvements are installed. A pre-construction meeting shall be set up with the City, contractor, engineer & owner prior to any construction.
12. All accessible handicap pathways, sidewalks and drive crossings shall not exceed 5% running slope and 2% cross slope or the latest requirements of the Americans with Disabilities Act (ADA). Handicap ramps shall not exceed 1/12 slope and 2% cross slope or the latest requirements of the Americans with Disabilities Act (ADA).
13. These plans shall be used in conjunction with any City of Franklin Standards that apply.

PLAN NOTES

- (A) HEAVY DUTY ASPHALT, SEE DETAIL 1/C501
- (B) LIGHT DUTY ASPHALT, SEE DETAIL 2/C501
- (C) CONCRETE PAVEMENT, SEE DETAIL 3/C501
- (D) CONCRETE SIDEWALK, SEE DETAIL 4/C501
- (E) 4" WHITE PAINTED LINE (INDOT STANDARD SPEC.)
- (F) PAINTED HANDICAP SYMBOL, SEE DETAIL 7/C501
- (G) 4" BLUE PAINTED LINE (INDOT STANDARD SPEC.)
- (H) HANDICAP RAMP TYPE G, SEE DETAIL 8/C501
- (I) HANDICAP SIGN, SEE DETAIL 6/C501
- (J) INTEGRAL CURB / WALK, SEE DETAIL 5/C501
- (K) DETECTABLE WARNING STRIP, SEE DETAIL 9/C501
- (L) TRASH DUMPSTER ENCLOSURE, SEE DETAILS 5/C500 6/C500

0 50' 100'

Sym.	Revisions	Date

Designed: RRL
Drawn: SJH
Checked:
Scale: 1" = 50'
Date: 10-16-14

SITE LAYOUT PLAN
HETSCO, INC.
CITY OF FRANKLIN
JOHNSON COUNTY, INDIANA

WALTER F. REDDER III REGISTERED PROFESSIONAL ENGINEER PE 60017777 STATE OF INDIANA
10/15/14

BANNING ENGINEERING
853 COLUMBIA ROAD, SUITE #101
PLAINFIELD, IN 46168
BUS: (317) 707-3700, FAX: (317) 707-3800
E-MAIL: Banning@BanningEngineering.com
WEB: www.BanningEngineering.com

Project No: 11191H
Sheet No: C102

Indiana811 Know what's below. Call before you dig.

File Name:11191H_alt.dgn
Folder Sheets
10/15/2014
SCALE: 50.0000 ' / in.
Project Number: 11191H

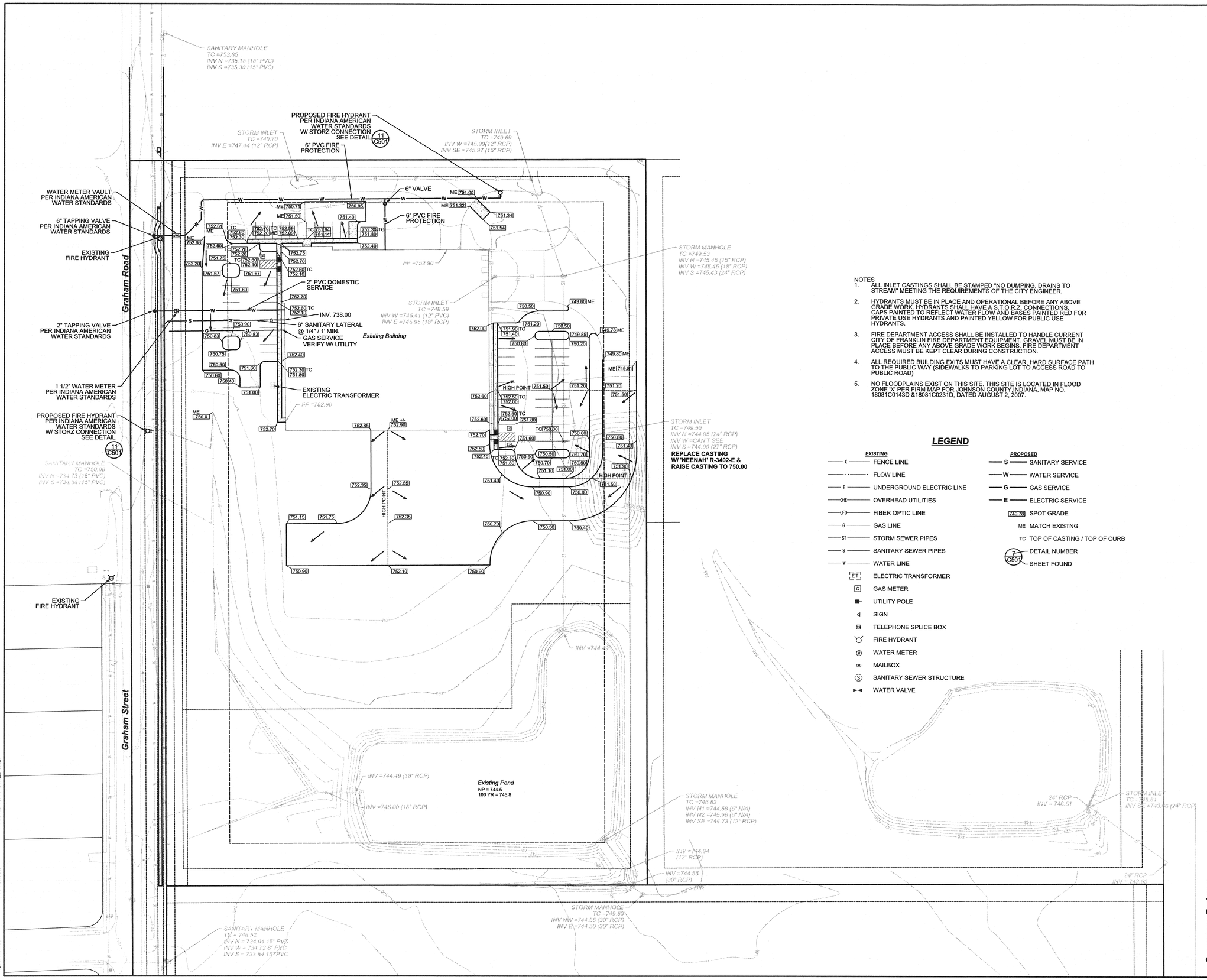

NOTES

1. ALL INLET CASTINGS SHALL BE STAMPED "NO DUMPING, DRAINS TO STREAM" MEETING THE REQUIREMENTS OF THE CITY ENGINEER.
2. HYDRANTS MUST BE IN PLACE AND OPERATIONAL BEFORE ANY ABOVE GRADE WORK. HYDRANTS SHALL HAVE A S.T.O.R.Z. CONNECTIONS, CAPS PAINTED TO REFLECT WATER FLOW AND BASES PAINTED RED FOR PRIVATE USE HYDRANTS AND PAINTED YELLOW FOR PUBLIC USE HYDRANTS.
3. FIRE DEPARTMENT ACCESS SHALL BE INSTALLED TO HANDLE CURRENT CITY OF FRANKLIN FIRE DEPARTMENT EQUIPMENT. GRAVEL MUST BE IN PLACE BEFORE ANY ABOVE GRADE WORK BEGINS. FIRE DEPARTMENT ACCESS MUST BE KEPT CLEAR DURING CONSTRUCTION.
4. ALL REQUIRED BUILDING EXITS MUST HAVE A CLEAR, HARD SURFACE PATH TO THE PUBLIC WAY (SIDEWALKS TO PARKING LOT TO ACCESS ROAD TO PUBLIC ROAD)
5. NO FLOODPLAINS EXIST ON THIS SITE. THIS SITE IS LOCATED IN FLOOD ZONE 'X' PER FIRM MAP FOR JOHNSON COUNTY,INDIANA, MAP NO. 18081C0143D &18081C0231D, DATED AUGUST 2, 2007.

LEGEND

EXISTING		PROPOSED	
X	FENCE LINE	S	SANITARY SERVICE
	FLOW LINE	W	WATER SERVICE
E	UNDERGROUND ELECTRIC LINE	G	GAS SERVICE
OHE	OVERHEAD UTILITIES	E	ELECTRIC SERVICE
UFO	FIBER OPTIC LINE	749.78	SPOT GRADE
G	GAS LINE	ME	MATCH EXISTNG
ST	STORM SEWER PIPES	TC	TOP OF CASTING / TOP OF CURB
S	SANITARY SEWER PIPES	7 C501	DETAIL NUMBER / SHEET FOUND
W	WATER LINE		
ET	ELECTRIC TRANSFORMER		
G	GAS METER		
	UTILITY POLE		
	SIGN		
TS	TELEPHONE SPLICE BOX		
	FIRE HYDRANT		
W	WATER METER		
	MAILBOX		
S	SANITARY SEWER STRUCTURE		
	WATER VALVE		

0 50' 100'

Sym.	Revisions	Date

Designed: RRL
Drawn: SJH
Checked:
Scale: 1" = 50'
Date: 10-16-14

GRADING AND DRAINAGE PLAN
HETSCO, INC.
CITY OF FRANKLIN
JOHNSON COUNTY, INDIANA

WALTER F. REDLER III REGISTERED PE 60017777 STATE OF INDIANA PROFESSIONAL ENGINEER
10/16/14

BANNING ENGINEERING
853 COLUMBIA ROAD, SUITE #101
PLAINFIELD, IN 46168
BUS: (317) 707-3700, FAX: (317) 707-3800
E-MAIL: Banning@BanningEngineering.com
WEB: www.BanningEngineering.com

Project No: 11191H
Sheet No: C110

Indiana 811 Know what's below. Call before you dig.

10/15/2014
SCALE: 50.0000 ' / in.
Project Number: 11191H
Folder: Sheets
File Name: 11191H_grd.dgn

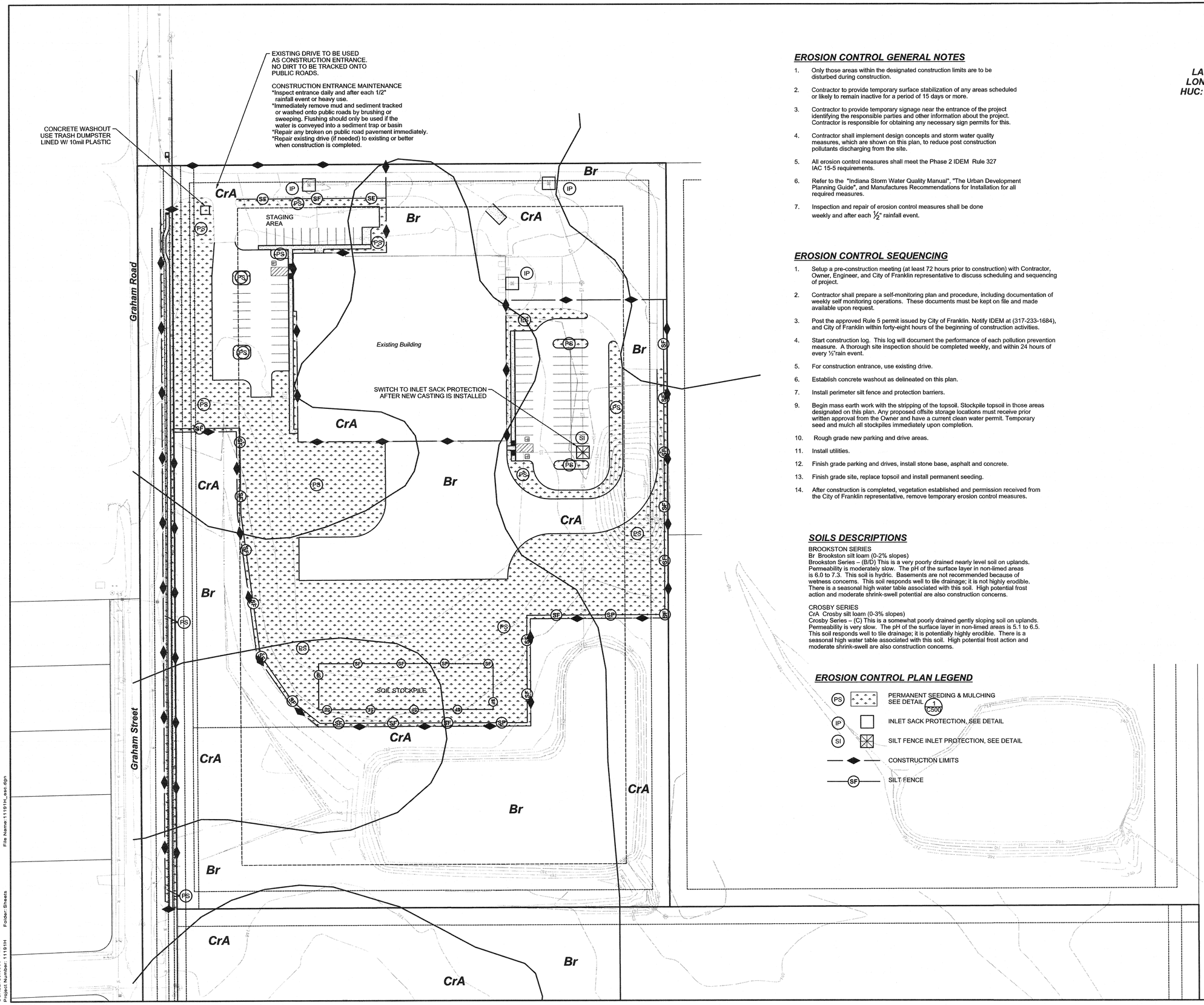

EROSION CONTROL GENERAL NOTES

1. Only those areas within the designated construction limits are to be disturbed during construction.
2. Contractor to provide temporary surface stabilization of any areas scheduled or likely to remain inactive for a period of 15 days or more.
3. Contractor to provide temporary signage near the entrance of the project identifying the responsible parties and other information about the project. Contractor is responsible for obtaining any necessary sign permits for this.
4. Contractor shall implement design concepts and storm water quality measures, which are shown on this plan, to reduce post construction pollutants discharging from the site.
5. All erosion control measures shall meet the Phase 2 IDEM Rule 327 IAC 15-5 requirements.
6. Refer to the "Indiana Storm Water Quality Manual", "The Urban Development Planning Guide", and Manufactures Recommendations for Installation for all required measures.
7. Inspection and repair of erosion control measures shall be done weekly and after each ½" rainfall event.

EROSION CONTROL SEQUENCING

1. Setup a pre-construction meeting (at least 72 hours prior to construction) with Contractor, Owner, Engineer, and City of Franklin representative to discuss scheduling and sequencing of project.
2. Contractor shall prepare a self-monitoring plan and procedure, including documentation of weekly self monitoring operations. These documents must be kept on file and made available upon request.
3. Post the approved Rule 5 permit issued by City of Franklin. Notify IDEM at (317-233-1684), and City of Franklin within forty-eight hours of the beginning of construction activities.
4. Start construction log. This log will document the performance of each pollution prevention measure. A thorough site inspection should be completed weekly, and within 24 hours of every ½"rain event.
5. For construction entrance, use existing drive.
6. Establish concrete washout as delineated on this plan.
7. Install perimeter silt fence and protection barriers.
9. Begin mass earth work with the stripping of the topsoil. Stockpile topsoil in those areas designated on this plan. Any proposed offsite storage locations must receive prior written approval from the Owner and have a current clean water permit. Temporary seed and mulch all stockpiles immediately upon completion.
10. Rough grade new parking and drive areas.
11. Install utilities.
12. Finish grade parking and drives, install stone base, asphalt and concrete.
13. Finish grade site, replace topsoil and install permanent seeding.
14. After construction is completed, vegetation established and permission received from the City of Franklin representative, remove temporary erosion control measures.

SOILS DESCRIPTIONS

BROOKSTON SERIES
Br Brookston silt loam (0-2% slopes)
Brookston Series – (B/D) This is a very poorly drained nearly level soil on uplands. Permeability is moderately slow. The pH of the surface layer in non-limed areas is 6.0 to 7.3. This soil is hydric. Basements are not recommended because of wetness concerns. This soil responds well to tile drainage; it is not highly erodible. There is a seasonal high water table associated with this soil. High potential frost action and moderate shrink-swell potential are also construction concerns.

CROSBY SERIES
CrA Crosby silt loam (0-3% slopes)
Crosby Series – (C) This is a somewhat poorly drained gently sloping soil on uplands. Permeability is very slow. The pH of the surface layer in non-limed areas is 5.1 to 6.5. This soil responds well to tile drainage; it is potentially highly erodible. There is a seasonal high water table associated with this soil. High potential frost action and moderate shrink-swell are also construction concerns.

EROSION CONTROL PLAN LEGEND

- PS — PERMANENT SEEDING & MULCHING SEE DETAIL 1/C500
- IP — INLET SACK PROTECTION, SEE DETAIL
- SI — SILT FENCE INLET PROTECTION, SEE DETAIL
- CONSTRUCTION LIMITS
- SF — SILT FENCE

LAT: 39°30'00" N
LONG: 86°03'15" W
HUC: 05120204090040

Sym.	Revisions	Date

Designed: RRL
Drawn: SJH
Checked: L.J.R.
Scale: 1" = 50'
Date: 10-16-14

EROSION CONTROL PLAN
HETSCO, INC.
CITY OF FRANKLIN
JOHNSON COUNTY, INDIANA

WALTER F. REIDER III PE 6007777 STATE OF INDIANA REGISTERED PROFESSIONAL ENGINEER
10/15/14

BANNING ENGINEERING
853 COLUMBIA ROAD, SUITE #101
PLAINFIELD, IN 46168
BUS: (317) 707-3700, FAX: (317) 707-3800
E-MAIL: Banning@BanningEngineering.com
WEB: www.BanningEngineering.com

Indiana811 Know what's below. Call before you dig.

Project No: 11191H
Sheet No: C400

10/15/2014
SCALE: $0.0000 ' / in.
Project Number: 11191H
Folder:Sheets
File Name:11191H_esc.dgn

ASSESSMENT OF CONSTRUCTION PLAN ELEMENTS (SECTION A)

A1 Index showing locations of required Plan Elements:
See This Sheet

A2 11 x 17 Plat denoting building lot numbers, boundaries, road layout / names:
Provide separately with submittal package

A3 Narrative describing the nature and purpose of the project:
Hetsco, Inc site consists of constructing new parking and drive along the northwest and southeast corners of an existing building.

A4 Vicinity map showing Project Location:
See Plan Set : Title Sheet, sheet C100

A5 Legal Description of the Project Site:
See Plan Set : Property Survey, sheet C101
Project Latitude : 39°30'00"N
Project Longitude : 86°03'15"W

A6 Location of all lots and proposed site improvements:
See Plan Set : Grading and Drainage Plan, sheet C110

A7 Hydrologic unit code
14 digit --05120204090040

A8 State or Federal Water Quality Permits Required:
401 Water quality Certification (IDEM) : None Required
Section 404 Permit (USACE) : None Required
Construction in a Floodway (InDNR) : None Required

A9 Specific Points where Stormwater discharge will leave the site:
The main point of discharge will be through an existing pond and existing storm pipe into an existing swale along Commerce Parkway.

A10 Location and names of all wetlands, lakes and water courses on and adjacent to the site:
None

A11 Identification of receiving waters:
Unnamed tributary that drains to Youngs Creek.

A12 Identification of potential discharges to ground water:
None known (abandoned wells sinkholes etc)

A13 100 Year floodplains, floodways and flood fringes:
This site is located in Flood Zone 'X' per FIRM Map for Johnson County, Indiana, Map No.s 18081C143D & 18081C0231D, dated August 2, 2007.

A14 Pre-construction & Post construction estimates of Peak Discharges:
10 year Pre-Construction Peak Discharge = 3.34 CFS
10 year Post Construction Peak Discharge = 1.05 CFS

A15 Adjacent land use, including upstream watershed:
See Plan Set : Property Survey, sheet C101
North : Commercial
South : Farm Field/Commercial
East : Farm Field/Commercial
West : Residential/Commercial

A16 Locations and approximate boundaries of all disturbed areas:
See Plan Set :Erosion Control Plan, Sheet C400

A17 Identification of existing vegetative cover:
See Plan Set : Property Survey, sheet C101

A18 Soils map including soil descriptions and limitations:
See Plan Set : Erosion Control Plan, Sheet C400

A19 Location, size and dimensions of proposed stormwater systems:
See Plan Set : Grading and Drainage Plan, sheet C110

A20 Plans for any off-site construction activities:
None

A21 Location of Proposed soil Stockpiles and /or Borrow areas:
See Plan Set : Erosion Control Plan, Sheet C400

A22 Existing site Topography :
See Plan Set : Property Survey, sheet C101

A23 Proposed final topography:
See Plan Set : Grading and Drainage Plan, sheet C110

ASSESSMENT OF STORMWATER POLLUTION PREVENTION PLAN (SECTION B)

B1 Description of potential pollutants sources associated with the construction activities:
Silt and sediment from exposed soils, leaves, mulch, vehicular sources such as leaking fuel or oil, brake fluid, brake dust, antifreeze,trash, debris, biological agents found in trash, fertilizers, herbicides, pesticides, lime dust and concrete washout.

B2 Sequence of stormwater quality implementation relative to land disturbance activities:
See noted sequences on the Erosion Control Plan, Sheet C400

B3 Stable construction entrance location(s) and specifications:
For Locations see Plan Set : Erosion Control Plan, Sheet C400
Use existing drive for construction entrance.

B4 Sediment control measures for sheet flow areas:
Silt fence will be installed along the east side of the site and along the north side of the existing pond.
For Locations see Plan Set : Erosion Control Plan, Sheet C400
For details See Plan Set : Erosion Control Details, sheet C500

B5 Sediment control measures for concentrated flow areas:
All construction will consist of sheet flow to the existing pond, existing storm inlet or existing swale on the west side of the site that drains to the pond.

B6 Storm sewer inlet protection measures, locations and specifications:
Silt Fence Inlet Protection and Inlet Sack Protection will be place at storm inlets.
For Locations see Plan Set : Erosion Control Plan, Sheet C400
For details See Plan Set : Erosion Control Details, sheet C500

B7 Runoff control measures:
Almost all of the erosion control measures used at this site can be viewed as runoff control measures, with the possible exception of the construction entrance and the concrete washout area, in that they either reduce the velocity, such as silt fence, inlet protection measures, and holding ponds, or reduce the energy of the runoff.
For Locations see Plan Set : Erosion Control Plan, Sheet C400
For details See Plan Set : Erosion Control Details, sheet C500

B8 Stormwater outlet protection specifications:
There will not be any storm sewer constructed with this site.

B9 Grade stabilization structures and specifications:
None required

B10 Location, dimensions, specifications and construction details of each stormwater quality measure:
For Locations see Plan Set : Erosion Control Plan, Sheet C400
For details See Plan Set : Erosion Control Details, sheet C500

B11 Temporary surface stabilization methods appropriate for each season:
Temporary seeding is required for any area left for 15 days or longer within this project, such as soil stockpiles. If construction goes beyond normal construction season, dormant seeding to be placed.
For Locations see Plan Set : Erosion Control Plan, Sheet C400
For details See Plan Set : Erosion Control Details, sheet C500

B12 Permanent surface stabilization specifications:
Permanent seeding will be applied after replacement of topsoil as described in the construction sequencing.
For Locations see Plan Set : Erosion Control Plan, Sheet C400
For details See Plan Set : Erosion Control Details, sheet C500

B13 Material handling and spill prevention plan:
MATERIAL HANDLING:

1. The proper management and disposal of waste should be practiced on site at all times to reduce pollution of storm water runoff. Hazardous waste should always be disposed of through a designated hazardous waste management or recycling facility.
2. Designate a waste collection area on-site that does not receive a substantial amount of runoff from upland areas and does not drain directly into a water body.
3. Keep products in original containers with original labels and material safety data information attached. Make sure products are properly sealed to prevent leaks and spills and stored in a weather proof self contained area away from heat, sparks and flames.
4. A program for recycling or disposal of materials associated with or from the project site shall be established by the contractor. All recycling containers shall be clearly labeled.
5. All construction activities are to be monitored and maintained by the contractor. As each new subcontractor comes on-site, the contractor will conduct and document a meeting to ensure awareness of the pollutant prevention program. Guidelines for proper handling, storage and disposal of construction site wastes shall be posted in the storage and use areas, and workers shall be trained in these practices.
6. Containers and equipment must be inspected regularly for leaks, corrosion, support or foundation failure, or any other signs of deterioration and must be tested for soundness. Any found to be defective should be repaired or replaced immediately.

SPILL PREVENTION PLAN:

Purpose:
The intention of this Spill Prevention, Control and Countermeasures (SPCC) is to establish the procedures and equipment required to prevent the discharge of oil and hazardous substances in quantities that violate applicable water quality standards, cause a sheen upon or discoloration of the surface of navigable waters or adjoining shorelines, or cause sludge or emulsion to be deposited beneath the surface of the water or adjoining shorelines. The Plan also establishes the activities required to mitigate such discharges (i.e., countermeasures) should they occur.

Definitions:
Pollutant: means pollutant of any kind or in any form, including but not limited to sediment, paint, cleaning agent, concrete washout, pesticides, nutrients, trash, hydraulic fluids, fuel, oil, petroleum, fuel oil, sludge, oil refuse, and oil mixed with wastes other than dredged soil.

Discharge:
Includes but is not limited to, any spilling, leaking, pumping, pouring, emitting, emptying, or dumping.

Navigable Waters:
Means all waters of the United States that are connected with a navigable stream, lake, or sea.
[Note: This definition is usually interpreted to mean any wastewater (even normally dry wash or storm sewer) that eventually drains into a navigable stream].
Plan Review and Amendments:
This Plan shall be reviewed and/or amended, if necessary, whenever there is a change in the design of the site, construction, operation, or maintenance which materially affects the site's potential for the discharge of regulated material.

Prediction of Potential Spills:

1. Nearest Navigable Water: Youngs Creek
2. Drainage System: All storm drainage leaves the site by open ditches and closed storm systems to an unnamed tributary of Youngs Creek
3. Possible Spill Sources (During and post construction): Vehicular sources such as leaking fuel or oil, brake fluid, grease, antifreeze; trash and debris, biological agents found in trash and debris, fertilizers, household items including but not limited to cleaning agents, chemicals, paint, herbicides and pesticides.
4. Groundwater Contamination:
   The facility maintains NO above ground or under ground storage tanks at this site. Therefore, it is felt that there is little or no possibility of post construction groundwater contamination. The facility does have public sanitary sewer and public water.

Alert Procedures for Spills:

1. Any personnel observing a spill will immediately instigate the following procedure:
   a. Dialing "911" from any telephone.
   b. Notify the appropriate emergency personnel.
2. The Emergency Coordinator will then take the following actions:
   a. Barricade the area allowing no vehicles to enter or leave the spill zone.
   b. Notify the Indiana Department of Environmental Management, Office of

Emergency Response by calling the appropriate telephone number:
Office 317-233-7745
Toll Free 800-233-7745
Also the National Response Center at 800-424-8802 and provide the following information:

- Time of observation of the spill
- Location of the spill
- Identity of material spilled
- Probable source of the spill
- Probable time of the spill
- Volume of the spill and duration
- Present and anticipated movement of the spill
- Weather conditions
- Personnel at the scene
- Action initiated by personnel
   c. Notify the City of Franklin Fire Department Phone: 9-1-1
   d. Notify the City of Franklin Police department Phone: 9-1-1
   e. Notify waste recovery contractor, maintenance personnel or other contractual personnel as necessary for cleanup.
   f. Coordinate and monitor cleanup until the situation has been stabilize and all spills have been eliminated.
   g. Cooperate with the IDEM-OER on procedures and reports involved with the event.

Cleanup Parameters:

1. The Developer shall be continually kept informed, maintain lists of qualified contractors and available Vac-trucks, tank pumpers and other equipment readily accessible for clean-up operations. In addition, a continually updated list of available absorbent materials and clean-up supplies should be kept on site.
2. All maintenance personnel will be made aware of techniques for prevention and containment of spills. They will be informed of the requirements and procedures outlined in this plan. They will be kept abreast of current developments or new information on the prevention of spills and / or necessary alterations to this plan.
3. If spills occur which could endanger human life, this becomes the primary concern. The discharge of the life saving protection function will be carried out by the local police and fire departments.
4. Absorbent materials, which are used in cleaning up spilled materials, will be disposed of in a manner subject to the approval of the Indiana Department of Environmental Management.
5. Flushing of spilled material with water will not be permitted unless so authorized by the Indiana Department of Environmental Management.

ADDITIONAL STORMWATER POLLUTION PREVENTION MEASURES
VEHICLE & EQUIPMENT MAINTENANCE

Description and Purpose:
Prevent or reduce the contamination of stormwater resulting from vehicle and equipment maintenance by running a "dry and clean site". The best option would be to perform maintenance activities at an offsite facility. If this option is not available then work should be performed in designated areas only, while providing cover for materials stored outside, checking for leaks and spills, and containing and cleaning up spills immediately.

Suitable Applications:
These procedures are suitable on all construction projects where an onsite yard area is necessary for storage and maintenance of heavy equipment and vehicles.

Limitations:
Onsite vehicle and equipment maintenance should only be used where it is impractical to send vehicles and equipment offsite for maintenance and repair. Sending vehicles/ equipment offsite should be done in conjunction with a stabilized Construction Entrance/ Exit. Outdoor vehicle or equipment maintenance is a potentially significant source of stormwater pollution. Activities that can contaminate stormwater include engine repair and service, changing or replacement of fluids, and outdoor equipment storage and parking (engine fluid leaks).

Implementation:
If maintenance must occur onsite, use designated areas, located away from drainage courses. Dedicated maintenance areas should be protected from stormwater runon and runoff, and should be located at least 50 ft from downstream drainage facilities and watercourses.

Drip pans or absorbent pads should be used during vehicle and equipment maintenance work that involves fluids, unless the maintenance work is performed over an impermeable surface in a dedicated maintenance area.

Place a stockpile of spill cleanup materials where it will be readily accessible.

ADDITIONAL STORMWATER POLLUTION PREVENTION MEASURES (CONTINUED):

All fueling trucks and fueling areas are required to have spill kits and/or use other spill protection devices.

Use absorbent materials on small spills. Remove the absorbent materials promptly and dispose of properly.

Inspect onsite vehicles and equipment daily at startup for leaks, and repair immediately, or remove from site.

Keep vehicles and equipment clean; do not allow excessive build-up of oil and grease. Segregate and recycle wastes, such as greases, used oil or oil filters, antifreeze, cleaning solutions, automotive batteries, hydraulic and transmission fluids. Provide secondary containment and covers for these materials if stored onsite.

Train employees and subcontractors in proper maintenance and spill cleanup procedures. Properly dispose of used oils, fluids, lubricants, and spill cleanup materials.

Do not place used oil in a dumpster or pour into a storm drain or watercourse.

Properly dispose of or recycle used batteries.

Do not bury used tires.

Repair leaks of fluids and oil immediately.

Keep ample supplies of spill cleanup materials onsite.

Maintain waste fluid containers in leak proof condition.

VEHICLE AND EQUIPMENT FUELING

Description and Purpose
Vehicle equipment fueling procedures and practices are designed to prevent fuel spills and leaks, and reduce or eliminate contamination of stormwater. This can be accomplished by using offsite facilities, fueling in designated areas only, enclosing or covering stored fuel, implementing spill controls, and training employees and subcontractors in proper fueling procedures.

Limitations
Onsite vehicle and equipment fueling should only be used where it is impractical to send vehicles and equipment offsite for fueling. Sending vehicles and equipment offsite should be done in conjunction with a Stabilized Construction Entrance/Exit.

Implementation
Use offsite fueling stations as much as possible. These businesses are better equipped to handle fuel and spills properly. Performing this work offsite can also be economical by eliminating the need for a separate fueling area at a site.

Discourage "topping off" of fuel tanks.

Absorbent spill cleanup materials and spill kits should be available in fueling areas and on fueling trucks, and should be disposed of properly after use.

Drip pans or absorbent pads should be used during vehicle and equipment fueling, unless the fueling is performed over an impermeable surface in a dedicated fueling area.

Use absorbent materials on small spills. Do not hose down or bury the spill. Remove the absorbent materials promptly and dispose of properly.

Avoid mobile fueling of mobile construction equipment around the site; rather, transport the equipment to designated fueling areas.

Train employees and subcontractors in proper fueling and cleanup procedures.

Dedicated fueling areas should be protected from stormwater runon and runoff and should be located at least 50 ft away from downstream drainage facilities and watercourses. Fueling must be performed on level grade areas.

Protect fueling areas with berms and dikes to prevent runon, runoff, and to contain spills.

Nozzles used in vehicle and equipment fueling should be equipped with an automatic shutoff to control drips. Fueling operations should not be left unattended.

Federal, state, and local requirements should be observed for any stationary above ground storage tanks.

Vehicles and equipment should be inspected each day of use for leaks. Leaks should be repaired immediately or problem vehicles or equipment should be removed from the project site.

Keep ample supplies of spill cleanup materials onsite.

Immediately clean up spills and properly dispose of contaminated soil and cleanup materials.

CONCRETE WASHOUT

The following steps will help reduce stormwater pollution from concrete wastes:
Discuss the concrete management techniques described in this BMP (such as handling of concrete waste and washout) with the ready mix concrete supplier before any deliveries are made.

Incorporate requirements for concrete waste management into material supplies and subcontractor agreements.

Store dry and wet materials under cover, away from drainage areas.

Avoid mixing excess amounts of fresh concrete.

Perform washout of concrete trucks offsite or in designated areas only.

Do not wash out concrete trucks into storm drains, open ditches, streets, or streams.

Do not allow excess concrete to be dumped onsite, except in designated areas.
For onsite washout:

- Locate washout area at least 50 feet from storm drains, open ditches, or water bodies.
-
- Wash out wastes into the temporary pit where the concrete can set, be broken up, and then disposed properly.
- Avoid creating runoff by draining water to a bermed or level area when washing concrete to remove fine particles and expose the aggregate.
- Do not wash sweepings from exposed aggregate concrete into the street or storm drain. Collect and return sweepings to aggregate base stockpile or dispose in the trash.

SOLID WASTE MANAGEMENT

Description and Purpose
Solid waste management procedures and practices are designed to prevent or reduce the discharge of pollutants to stormwater from solid or construction waste by providing designated waste collection areas and containers, arranging for regular disposal, and training employees and subcontractors.

Suitable Applications
This BMP is suitable for construction sites where the following wastes are generated or stored:
Solid waste generated from trees and shrubs removed during land clearing, demolition of existing structures (rubble), and building construction.

Packaging materials including wood, paper, and plastic.

Scrap or surplus building materials including scrap metals, rubber, plastic, glass pieces and masonry products.

Domestic wastes including food containers such as beverage cans, coffee cups, paper bags, plastic wrappers, and cigarettes.

Construction wastes including brick, mortar, timber, steel and metal scraps, pipe and electrical cuttings, nonhazardous equipment parts, styrofoam and other materials from transport and package construction materials

Implementation
Select designated waste collection areas onsite.

Inform contractors that you will accept only watertight dumpsters for onsite use.

Inspect dumpsters for leaks and repair any dumpster that is not watertight.

ADDITIONAL STORMWATER POLLUTION PREVENTION MEASURES (CONTINUED):

Provide an adequate number of containers with lids or covers that can be placed over the container to keep rain out or to prevent loss of wastes when it is windy.

Plan for additional containers and more frequent pickup during the demolition phase of construction.

Collect site trash daily, especially during rainy and windy conditions.

Remove this solid waste promptly since erosion and sediment control devices tend to collect litter.

Make sure that toxic liquid wastes (used oils, solvents, and paints) and chemicals (acids, pesticides, additives, curing compounds) are not disposed of in dumpsters designated for construction debris.

Do not hose out dumpsters on the construction site. Leave dumpster cleaning to the trash hauling contractor.

Arrange for regular waste collection before containers overflow.

Clean up immediately if a container does spill.

Make sure that construction waste is collected, removed, and disposed of only at authorized disposal areas.

Incorporate requirements for solid waste management into builder and subcontractor agreements.

Littering on the project site should be prohibited.

To prevent clogging of the storm drainage system, litter and debris removal from drainage grates, trash racks, and ditch lines should be a priority.

Trash receptacles should be provided in the contractor's yard, field trailer areas, and at locations where workers congregate for lunch and break periods.

Litter from work areas within the construction limits of the project site should be collected and placed in watertight dumpsters at least weekly, regardless of whether the litter was generated by the contractor, the public, or others. Collected litter and debris should not be placed in or next to drain inlets, stormwater drainage systems, or watercourses.

Dumpsters of sufficient size and number should be provided to contain the solid waste generated by the project.

Full dumpsters should be removed from the project site and the contents should be disposed of by the trash hauling contractor.

Construction debris and waste should be removed from the site biweekly or more frequently as needed.

Construction material visible to the public should be stored or stacked in an orderly manner.

Stormwater runon should be prevented from contacting stored solid waste through the use of berms, dikes, or other temporary diversion structures or through the use of measure to elevate waste from site surfaces.

Solid waste storage areas should be located at least 50 ft. from drainage facilities and watercourses and should not be located in area prone to flooding or ponding.

Inspection and Maintenance
Inspect construction waste area weekly.

Arrange for regular waste collection.

B14 Monitoring and maintenance guidelines for each proposed stormwater quality measure:
Each Measure shall be inspected weekly and after each 1/2" rainfall event.
Follow maintenance guidelines for each measure as specified in each relevant construction detail.
See Plan Set : Erosion Control Details, sheet C500

B15 Erosion & sediment control specifications for individual building lots:
N/A

STORMWATER POLLUTION PREVENTION PLAN POST CONSTRUCTION (SECTION C)

C1 Description of pollutants and their sources associated with the proposed land use:
Leaves, mulch, vehicular sources such as leaking fuel or oil, brake fluid, brake dust, grease, antifreeze, metals, rubber fragments, road grit, salts and sands, trash and debris, fertilizers, cleaning agents chemicals, paint, animal waste, elevated storm runoff temperatures, pesticides and pathogens.

C2 Sequence describing stormwater quality measure implementation:
Reference Erosion Control Sequencing
See Plan Set : Initial and Final Erosion Control Plans, sheets C400 & C401

Permanent Seeding
Permanent seeding will be place within 15 days after final grading is completed.

Existing Wet Detention Basin
Existing Wet Detention Basin was initially excavated as part of mass grading of the site. It will be used throughout the construction phase to control sediment, then persist into the post construction phase as a permanent feature providing stormwater retention and sediment control.

C3 Description of proposed post construction stormwater quality measures:

Permanent Seeding
Permanent seeding will be placed to act as a filter and to prevent erosion.

Existing Wet Detention Basin
It serves to control the volume and rate of runoff. The facility removes sediment, BOD organic nutrients and trace metals through the process of settling of pollutants. Biological processes occurring in the pond aid in reducing the amount of soluble nutrients present such as nitrate and phosphorus.

C4 Location, dimensions, specifications and construction details of stormwater quality measures:
For Locations see Plan Set : Erosion Control Plan, sheet C400
For details See Plan Set : Erosion Control Details, sheet C500

C5 Description of maintenance guidelines for post construction stormwater quality measures:

Permanent Seeding
Permanent seeding areas should be checked annually for issues related to performance. During this time plant seed if necessary and address any erosion problems. Trash should be removed on an as need basis. The grass should be kept to a 3" - 4' height. Maintenance is the responsibility of the owner.

Existing Wet Detention Basin
Inlets and outlets should be checked to make sure they are free of debris.
The wet ponds should be checked semiannually to ensure proper performance.
Banks should be checked for erosion, and repaired if necessary. Sediment should be removed from the pool when the accumulated sediment volume exceeds 20% of the basin volume. Maintenance shall be done by the owner.

EXAMPLE EVALUATION LOG SHEET

EVALUATION FOR CONSTRUCTION PROJECTS
A trained individual shall perform a written evaluation of the project site.
a. By the end of the next business day following each rainfall that exceeds 0.5".
b. A minimum of one (1) time per week

Project Name: ______
Name of Trained Individual: ______ Date of Inspection: ______
Is Evaluation following a rainfall? 0 yes 0 no If yes, date the rain stopped: ______ Inches: ______

No.	PROBLEM OR CONCERN	YES	NO	N/A
1.	Is the site information posted at the entrance?			
2.	Are all necessary permits obtained and special provisions being implemented?			
3.	Is a construction entrance installed? Is it effective? Is it enough?			
4.	Are public and private streets clean?			
5.	Are appropriate practices installed where stormwater leaves the site?			
6.	Is silt fence entrenched into the ground?			
7.	Is silt fence upright? Do fabric and stakes meet specifications? Is fabric is not too torn?			
	Is silt fence terminated to higher ground? Is it properly joined at ends?			
8.	Are sediment basins and traps installed according to the plan?			
	Are the pipes or rock spillway still functional?			
9.	Is the earthwork for erosion and sediment control practices properly graded, seeded and/or mulched?			
10.	Are diversions, swales, and/or waterbars installed to plan and protected?			
11.	Do perimeter practices have adequate capacity and do not need to be cleaned out?			
12.	Is inlet protection installed on all functional inlets? (not filter fabric under grate)			
13.	Are inlet protection measures installed so water does not flow under it?			
14.	Are the frame, cross-bracing and/or stakes adequate and meet specifications?			
15.	Is the fabric, straw, mulch and/or stone intact without holes or tears?			
16.	Are catch basin insert protection installed where required?			
17.	Has sediment been removed from the catch basin insert protection?			
18.	Has swales and ditches been stabilized or protected?			
19.	Are stormwater outlets adequately stabilized?			
20.	Has temporary stabilization of distributed ground been addressed?			
21.	Has all disturbed areas that will lie dormant for 15 days protected?			
22.	Has all protected dormant areas met a minimum 70% coverage?			
23.	Does growing vegetation have sufficient water and/or nutrients to grow?			
24.	Is permanent stabilization of disturbed ground progressing through the project?			
25.	Is final grading and stabilization progressing on completed areas?			
26.	Has the soil been properly prepared for seeding?			
27.	Has hard or soft armoring been installed where natural vegetation will erode?			
28.	Does water pumping operations have a protected outlet and is discharge water clear?			
29.	Has a designated washout been established for concrete trucks?			
30.	Is a dumpster located onsite for trash disposal?			
31.	Are onsite fuel tanks and other toxic materials safely stored and protected?			
32.	Are smaller construction sites not required to file a separate NOI complying with the overall plan?			

ALL PROBLEMS OR CONCERNS NEED TO BE ADDRESSED WITH A CORRECTIVE ACTION
Identify the problem by number and/or provide additional explanation as needed.

Developer Rep. contacted, name and date: ______ Date: ______
Contractor Rep. contacted, name and date: ______ Date: ______
Report submitted by: ______ Date: ______

Revisions	Sym.	Date

Designed: RRL
Drawn: SJH
Checked: [signature]
Scale: NONE
Date: 10-16-14

Storm Water Pollution Prevention Plan
HETSCO, INC.
CITY OF FRANKLIN
JOHNSON COUNTY, INDIANA

WALTER F. REEDER III — REGISTERED PE 60017777 — STATE OF INDIANA — PROFESSIONAL ENGINEER
[signature] 10/16/14

BANNING ENGINEERING
853 COLUMBIA ROAD, SUITE #101
PLAINFIELD, IN 46168
BUS: (317) 707-3700, FAX: (317) 707-3800
E-MAIL: Banning@BanningEngineering.com
WEB: www.BanningEngineering.com

Project No: 11191H
Sheet No: C401

10/16/2014
SCALE 1.0000 ' / in.
Project Number: 11191H
File Name: 11191H_swppp.dgn
Folder: Sheets

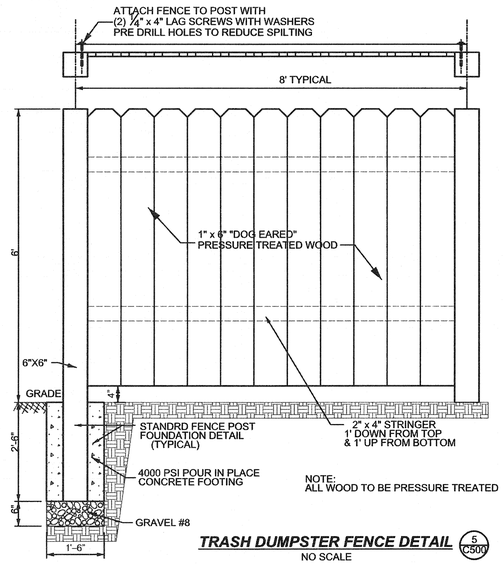

TRASH DUMPSTER FENCE DETAIL (5 / C500)

NO SCALE

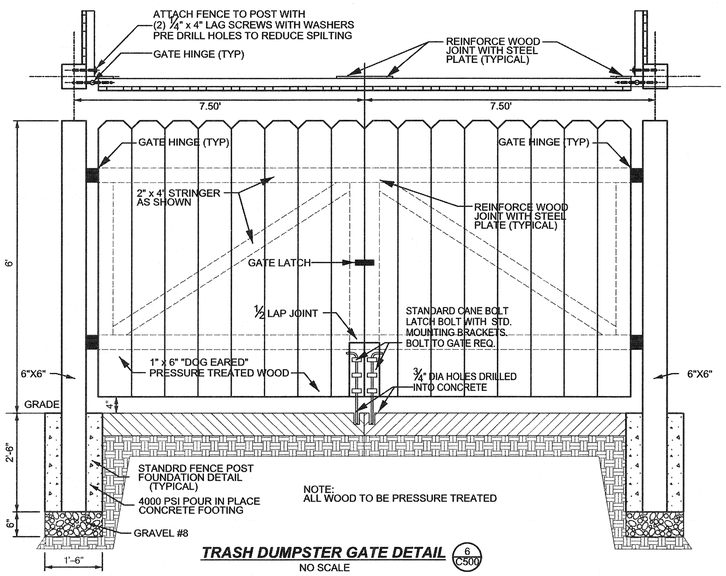

TRASH DUMPSTER GATE DETAIL (6 / C500)

NO SCALE

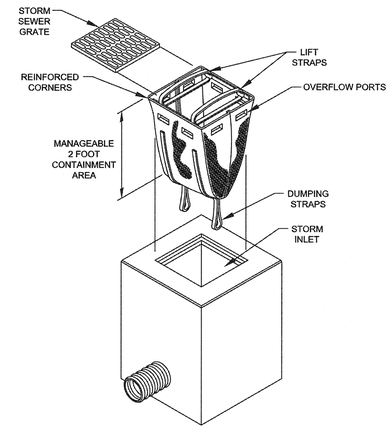

Maintenance
1. Remove all accumulated sediment and debris weekly or after each 1/2" rainfall event.
2. Remove sediment from bag after bag is 1/3 full.
3. If bag is damaged, remove bag and replace with new.

INLET SACK PROTECTION (4 / C500)

NO SCALE

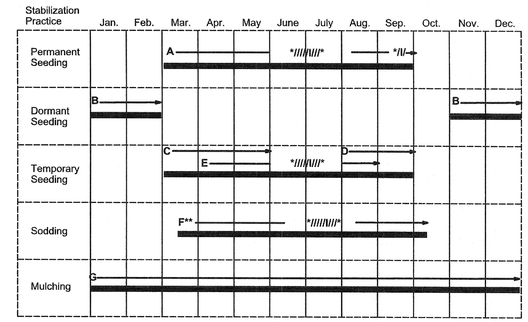

A = Kentucky Bluegrass 40 lbs/acre; or 40 lbs. tall Fescue; plus 2 tons straw mulch/acre or add Annual Ryegrass 20 lbs/acre.

B = Kentucky Bluegrass 60 lbs/acre; or 40 lbs. tall Fescue; plus 2 tons straw mulch/acre or add Annual Ryegrass 30 lbs/acre.

C = Spring Oats 100 lbs./acre

D = Wheat or Rye 150 lbs./acre.

E = Annual Ryegrass 40 lbs/acre. (1 lb./1000 sq. ft.)

F = Sod

G = Straw Mulch 2 tons/acre.

/\/ Irrigation needed during June, July, and/or September.

** Irrigation needed for 2 to 3 weeks after applying sod.

Lime and fertilize to site specific soils tests or apply fertilizer at a rate of 1000 lbs. per acre or 12-12-12 or equivalent.

All swales shall be seeded with 2 lbs. Adelphi bluegrass and 2 lbs. Perennial Derby rye, or equivalent per 1000 square feet. mulch with one bale of straw per 1000 square feet. Fertilize with 5 lbs. of 20-5-5 per 1000 square feet unless specified otherwise.

MAINTENANCE
Inspect weekly and after each 1/2" rainfall event, until the stand is successfully established. (Characteristics of a successful stand include: vigorous dark green or bluish-green seedlings; uniform density with nurse plants, legumes, and grasses well inter-mixed; green leaves; and the perennials remaining green throughout the summer, at least at the plant base.)

Plan to add fertilizer the following growing season according to soil test recommendations.

Repair damaged, bare, or sparse areas by filling any gullies, re-fertilizing, over- or re-seeding, and mulching.
If plant cover is sparse or patchy, review the plant materials chosen, soil fertility, moisture condition, and mulching; then repair the affected area either by over-seeding or by re-seeding and mulching after re-preparing the seedbed.

If vegetation fails to grow, consider soil testing to determine acidity or nutrient deficiency problems. (Contact your SWCD or Cooperative Extension office for assistance.)

If additional fertilization is needed to get a satisfactory stand, do so according to the soil test recommendations.

SEEDING CHART (1 / C500)

NO SCALE

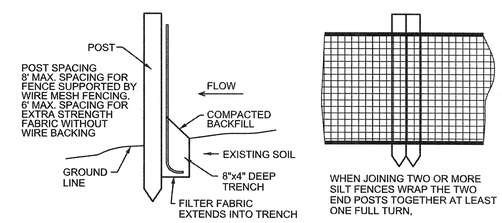

SLOPE CHECK

JOINING FENCES

MAINTENANCE
*Inspect the silt fence weekly and after each 1/2" rainfall event.
*If fence fabric tears, starts to decompose, or in any way becomes ineffective, replace the affected portion immediately.
*Remove deposited sediment when it reaches half the height of the fence at its lowest point or is causing the fabric to bulge.
*Take care to avoid undermining the fence during clean out.
*After the contributing drainage area has been stabilized, remove the fence and sediment deposits, bring the disturbed area to grade, stabilize,

SILT FENCE DETAIL (2 / C500)

NO SCALE

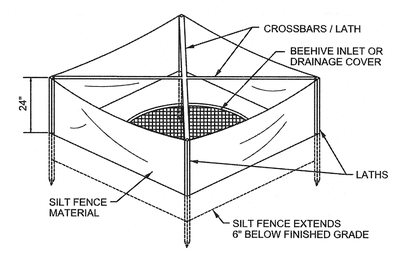

NOTE:
1. SEE SILT FENCE DETAIL FOR MATERIAL SPECIFICATIONS
2. SILT FENCE SHALL BE PREASSEMBLED BY SUPPLIER.

MAINTENANCE
*Inspect the silt fence weekly and after each 1/2" rainfall event.
*If fence fabric tears, starts to decompose, or in any way becomes ineffective, replace the affected portion immediately.
*Remove deposited sediment when it reaches half the height of the fence at its lowest point or is causing the fabric to bulge.
*Take care to avoid undermining the fence during clean out.
*After the contributing drainage area has been stabilized, remove the fence and sediment deposits, bring the disturbed area to grade, stabilize,

SILT FENCE INLET PROTECTION (3 / C500)

NO SCALE

Sym.	Revisions	Date

Designed: RRL
Drawn: SJH
Checked:
Scale: NONE
Date: 10-16-14

EROSION CONTROL DETAILS
HETSCO, INC.
CITY OF FRANKLIN
JOHNSON COUNTY, INDIANA

WALTER F. REEDER III REGISTERED PE 60017777 STATE OF INDIANA PROFESSIONAL ENGINEER
10/15/14

BANNING ENGINEERING
853 COLUMBIA ROAD, SUITE #101
PLAINFIELD, IN 46168
BUS: (317) 707-3700, FAX: (317) 707-3800
E-MAIL: Banning@BanningEngineering.com
WEB: www.BanningEngineering.com

Project No: 11191H
Sheet No: C500

10/15/2014
SCALE: 1.0000 ' / in.
Project Number: 11191H
Folder: Sheets
File Name: 11191H_detesc.dgn

GENERAL NOTES :

1. These dimensions are based on a 6 in. curb height. They shall be proportionally adjusted for other curb heights.
2. Where site infeasibility precludes construction to the width shown, such width may be decreased to a minimum of 3'-0.
3. The bottom edge of the curb ramp shall be flush with the edge of adjacent pavement and gutter line.
4. Landing areas at the top of curb ramps shall have maximum cross slope of 50 : 1 in any direction. When site infeasibility precludes a landing slope of 50 : 1 in any direction, the slope perpendicular to the curb face shall not exceed 50 :1.
5. If site infeasibility precludes construction to the width shown, the landing width may be decreased to 3'-0 minimum. The running slope of the curb ramp may be steepened to a maximum of 10 : 1 for a maximum 6 in. rise.
6. Drainage inlets should be located uphill from curb ramps to prevent puddles at the path of travel.
7. See Standard Drawing E 604-SWCR-12 for improved access on narrow sidewalks.
8. Algebraic difference in grade between the base of curb ramp and the gutter shall be limited to less than 11%. If it is not practical, a 2'-0 wide level strip shall be provided. See detail sketch.
9. Minimum recommended width of curb ramp is 4'-0.

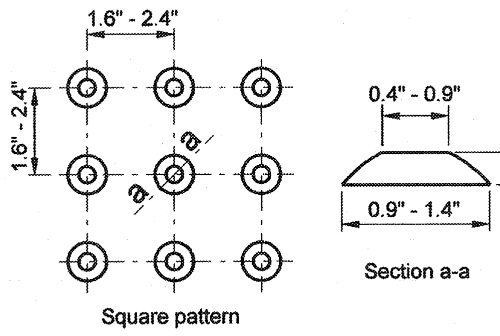

TRUNCATED DOMES USED IN DETECTABLE WARNINGS

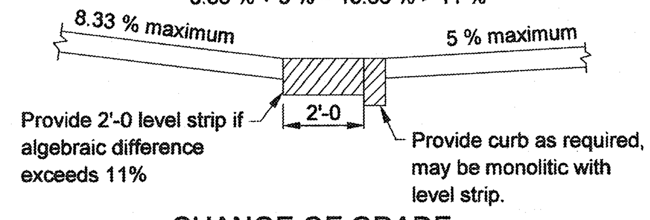

CHANGE OF GRADE

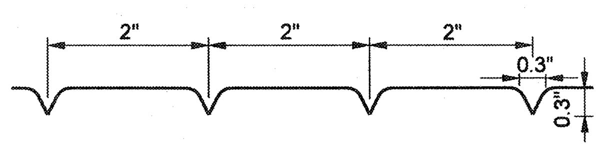

DETAIL OF RAMP GROOVES

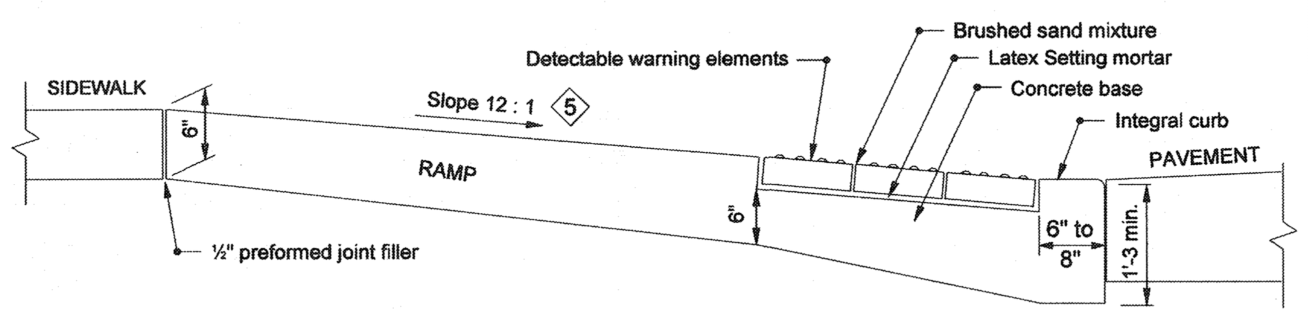

RAMP AND BRICK SURFACE CONSTRUCTION DETAIL

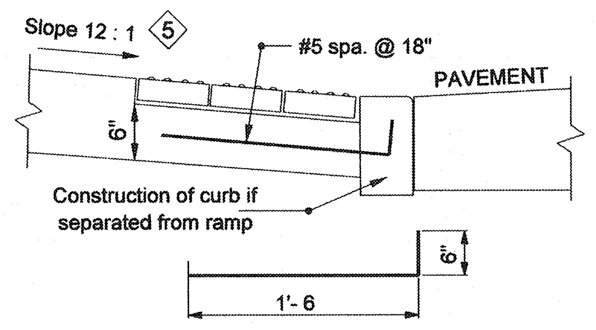

ALTERNATE CURB CONSTRUCTION

9 / C501

INDIANA DEPARTMENT OF TRANSPORTATION
SIDEWALK CURB RAMPS GENERAL NOTES & DETAILS
SEPTEMBER 2005
STANDARD DRAWING NO. E 604-SWCR-02

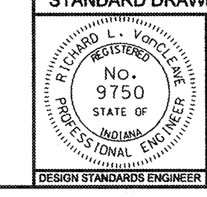

/s/ Richard L. VonCleave 9-01-05
DESIGN STANDARDS ENGINEER DATE
/s/ Richard K. Smutzer 9-01-05
CHIEF HIGHWAY ENGINEER DATE
DESIGN STANDARDS ENGINEER

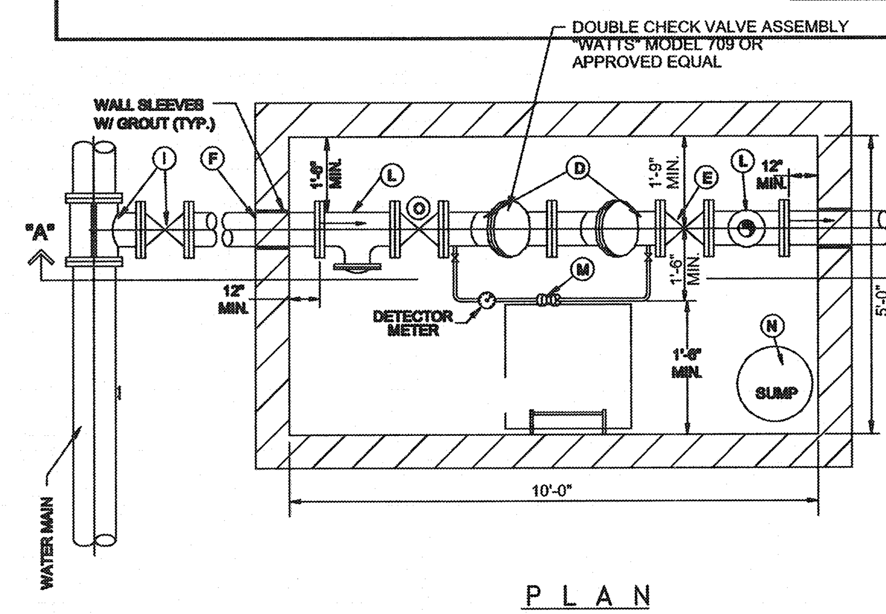

P L A N

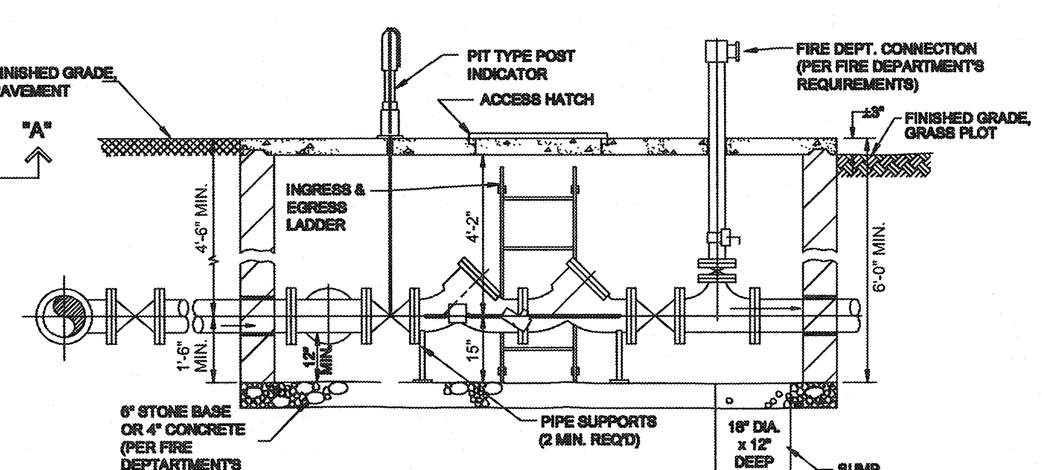

S E C T I O N "A–A"

L E G E N D

- (A) NOT USED
- (B) NOT USED
- (C) NOT USED
- (D) DOUBLE CHECK DETECTOR ASSEMBLY
- (E) FLANGED OS & Y VALVE
- (F) FIRE LINE
- (G) NOT USED
- (H) NOT USED
- (I) TAPPING SLEEVE W/ TAPPING VALVE & BOX (COORDINATE WITH LOCAL UTILITY SUPERINTENDENT/MANAGER)
- (J) NOT USED
- (K) NOT USED
- (L) FLANGED TEE
- (M) DOUBLE CHECK DETECTOR ASSEMBLY
- (N) SUMP FOR PUMP (PER FIRE DEPT. REQUIREMENTS)
- (O) FLANGED GATE VALVE WITH PIT TYPE POST INDICATOR

NOTES:

1. CUSTOMER SHALL FURNISH & INSTALL VAULT INCLUDING ALL APPERTENCES EXCEPT AS NOTED BELOW.
2. VAULT CONSTRUCTION MATERIALS SHALL BE 8"x8x16" CMU, OR PRECAST, OR CAST-IN-PLACE CONCRETE AT CUSTOMER'S SELECTION.
3. INSIDE DIMENSIONS PER DRAWING NOTES. VAULT TO BE SET LENGTHWISE WITH SERVICE.
4. TOP OF VAULT TO BE CONCRETE, AT LEAST 4" THICK WITH REINFORCING SUITABLE FOR ANTICIPATED LOADING WHEN VAULT IS CONSTRUCTED IN PAVED AREAS. PAVEMENT IS TO BE LEVEL WITH TOP OF VAULT, AND THE TOP REINFORCED AS REQUIRED TO SUPPORT TRAFFIC LOADS(i.e. H-20 WHEEL LOADS). WHEN VAULT IS CONSTRUCTED IN GRASS PLOT, TOP OF VAULT SHALL BE 3" ABOVE FINISHED GRADE.
5. BOTTOM OF VAULT TO BE EITHER A MINIMUM OF 6" OF CRUSHED STONE OR 4" CONCRETE PER FIRE DEPARTMENTS REQUIREMENT. MINIMUM CLEARANCE OF 12" BELOW BOTTOM OF FIRE SERVICE AND DOMESTIC SERVICE LINES IS REQUIRED.
6. DOUBLE CHECK DETECTOR ASSEMBLY SHALL BE A MODEL APPROVED BY THE INDIANA DEPARTMENT OF ENVIRONMENTAL MANAGEMENT, WITH RESILIENT SEAT GATE VALVE ON INLET AND OUTLET SIDES. DETECTOR METER IS FURNISHED BY UTILITY AND INSTALLED BY CUSTOMER.
7. ACCESS HATCH IN TOP OF VAULT SHALL BE 30"x30" ALUMINUM BILCO J-2AL, BILCO PCM-2, HALLIDAY Q1S3030 OR EQUAL. ACCESS HATCH SHALL HAVE SAME OR GRATER LOADING CAPACITY AS VAULT LID. PIPE HATCH FRAME DRAIN TO VAULT FLOOR OR SUMP, AS APPLICABLE.
8. LADDER FOR VAULT INGRESS AND EGRESS SHALL BE PER OSHA REQUIREMENTS. LADDER MATERIAL SHALL BE ALUMINUM OR FIBERGLASS AND INCLUDE A BILCO "LADDER-UP" SAFETY DEVICE OR EQUAL.

WATER METER VAULT (10 / C501)
NO SCALE

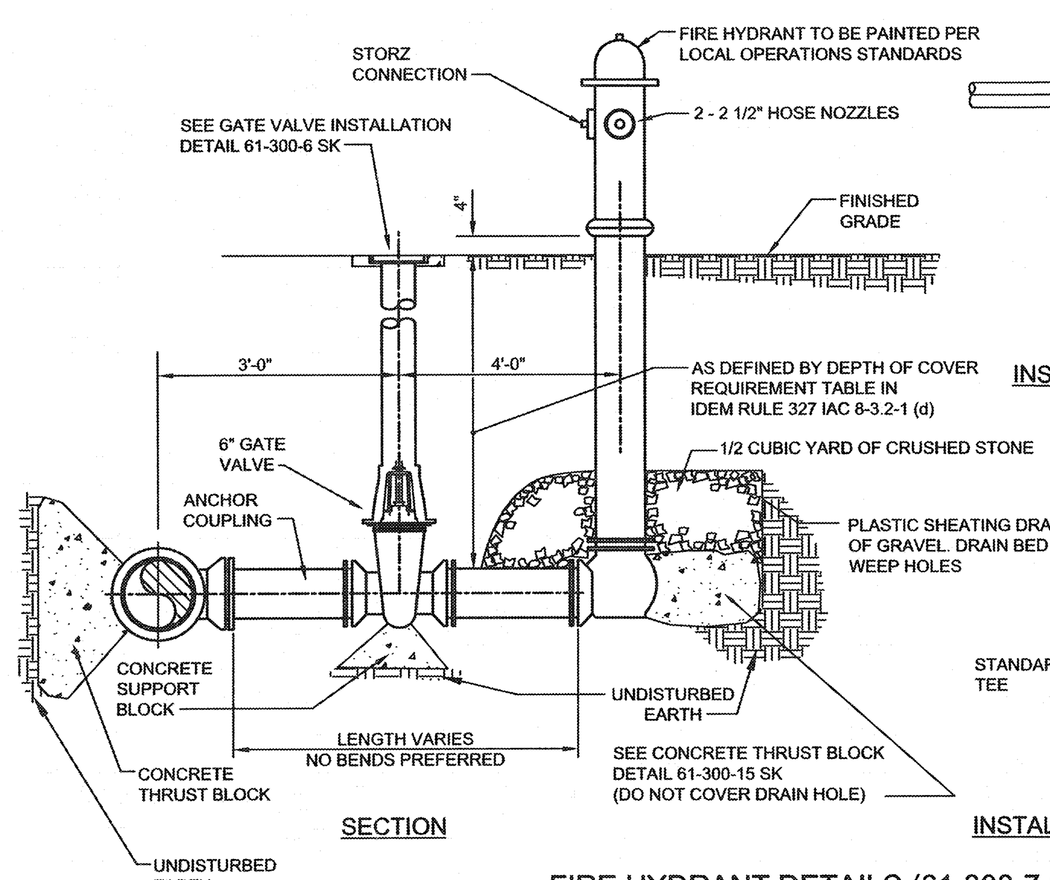

SECTION

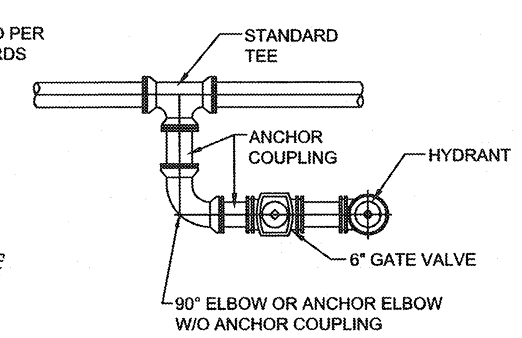

INSTALLATION PARALLEL TO MAIN

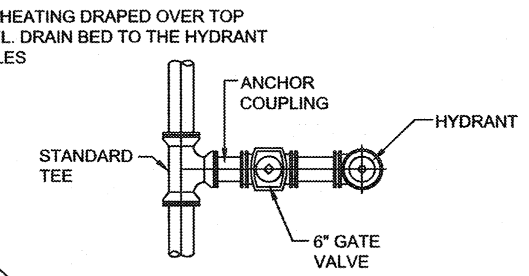

INSTALLATION PERPENDICULAR TO MAIN

FIRE HYDRANT DETAILS (61-300-7 SK) (11 / C501)
NOT TO SCALE

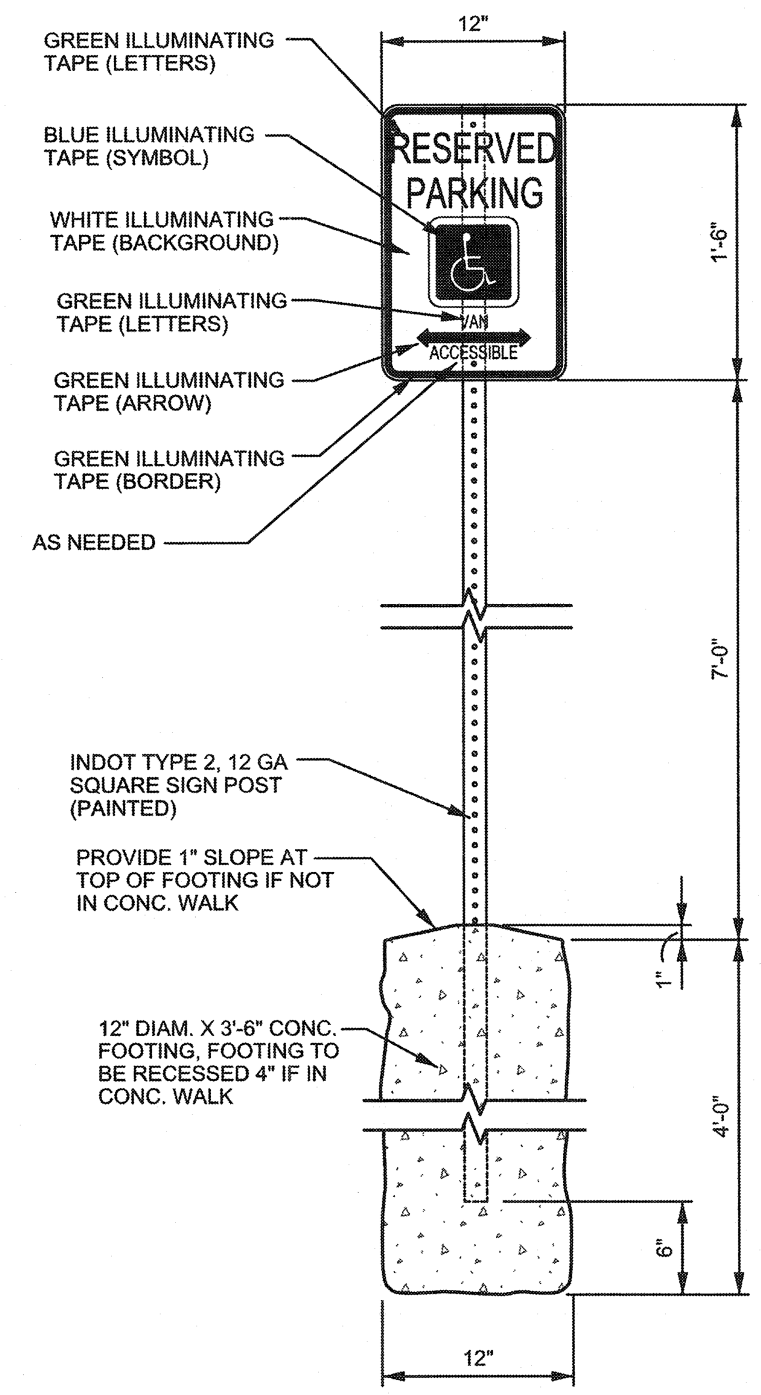

HANDICAP PARKING SIGN DETAIL (6 / C501)
NO SCALE

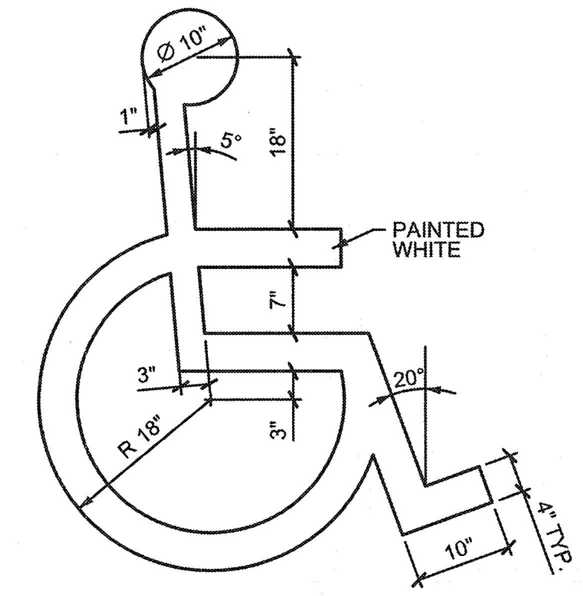

NOTE: THE HANDICAP SYMBOL SHALL MEET THE LATEST AMERICANS WITH DISABILITIES ACT (ADA) REQUIREMENTS.

HANDICAP PARKING SYMBOL DETAIL (7 / C501)
NO SCALE

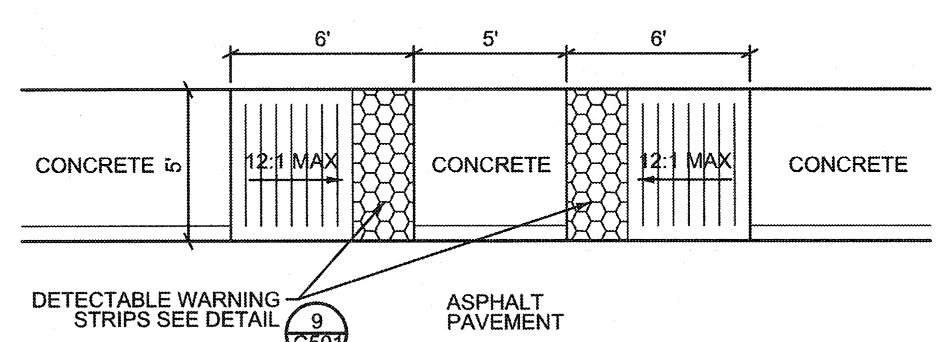

HANDICAP RAMP (8 / C501)
NO SCALE

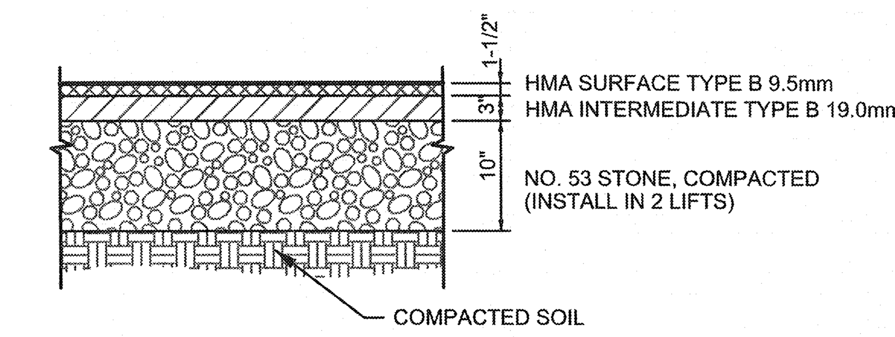

HEAVY DUTY PAVEMENT (1 / C501)
NO SCALE

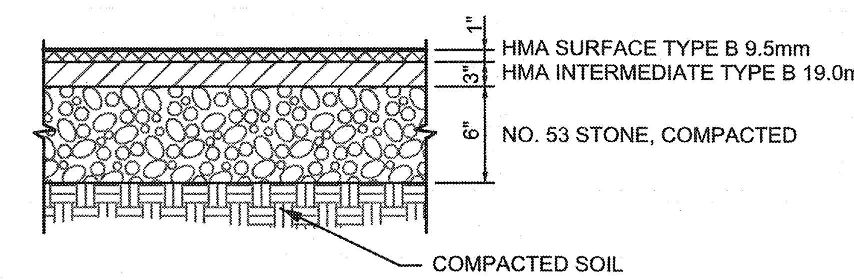

LIGHT DUTY PAVEMENT (2 / C501)
NO SCALE

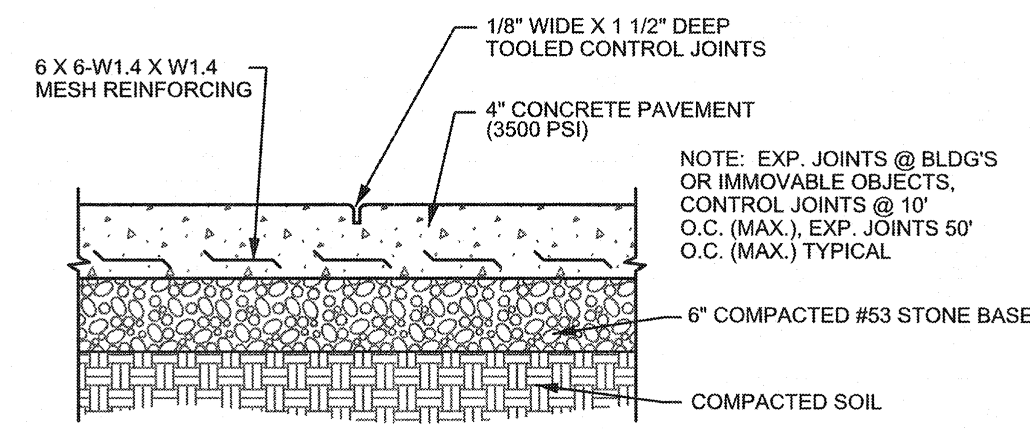

CONCRETE PAVEMENT DETAIL (3 / C501)
NO SCALE

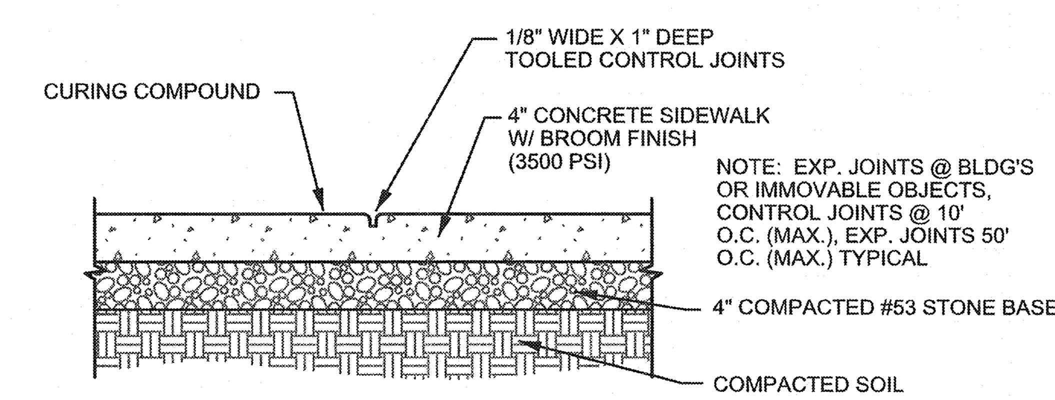

4" CONCRETE SIDEWALK DETAIL (4 / C501)
NO SCALE

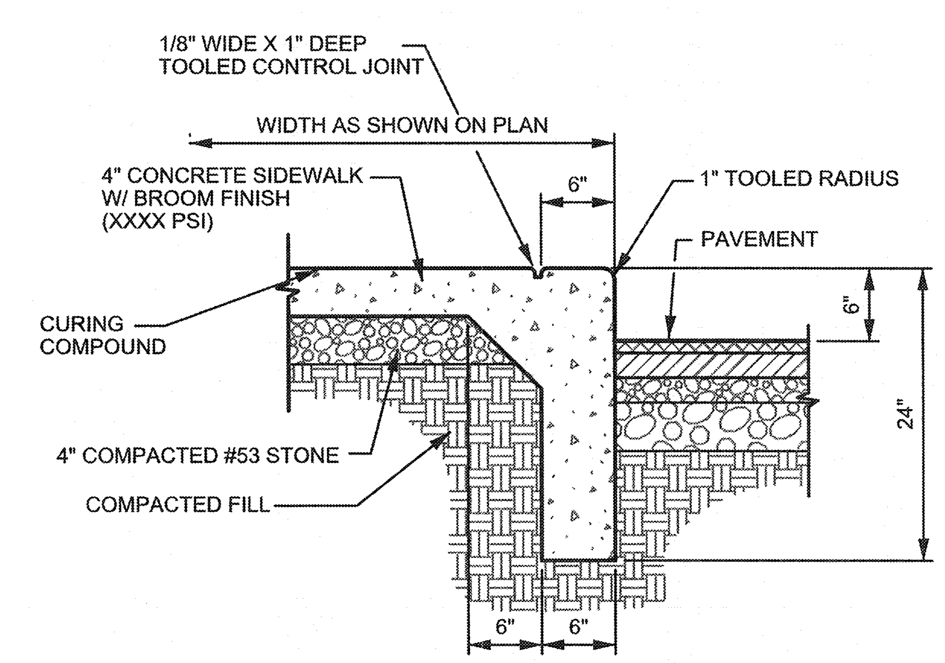

NOTE:
EXPANSION JOINTS AT BUILDINGS OR IMMOVABLE OBJECTS, CONTROL JOINTS @ 10' O.C.(MAX), EXPANSION JOINTS 50' O.C.(MAX) TYPICAL

INTEGRAL CURB/WALK DETAIL (5 / C501)
NO SCALE

Sym.	Revisions	Date

Designed:	RRL
Drawn:	SJH
Checked:	[signature]
Scale:	NONE
Date:	10-16-14

MISCELLANEOUS DETAILS
HETSCO, INC.
CITY OF FRANKLIN
JOHNSON COUNTY, INDIANA

W. LEE F. REEDER III REGISTERED PE 60017777 STATE OF INDIANA PROFESSIONAL ENGINEER
10/16/14

BANNING ENGINEERING
853 COLUMBIA ROAD, SUITE #101
PLAINFIELD, IN 46168
BUS: (317) 707-3700, FAX: (317) 707-3800
E-MAIL: Banning@BanningEngineering.com
WEB: www.BanningEngineering.com

Project No: 11191H
Sheet No:
C501

10/15/2014
SCALE: 1.0000 ' / in.
Project Number: 11191H
File Name: 11191H_demsc.dgn
Folder: Sheets

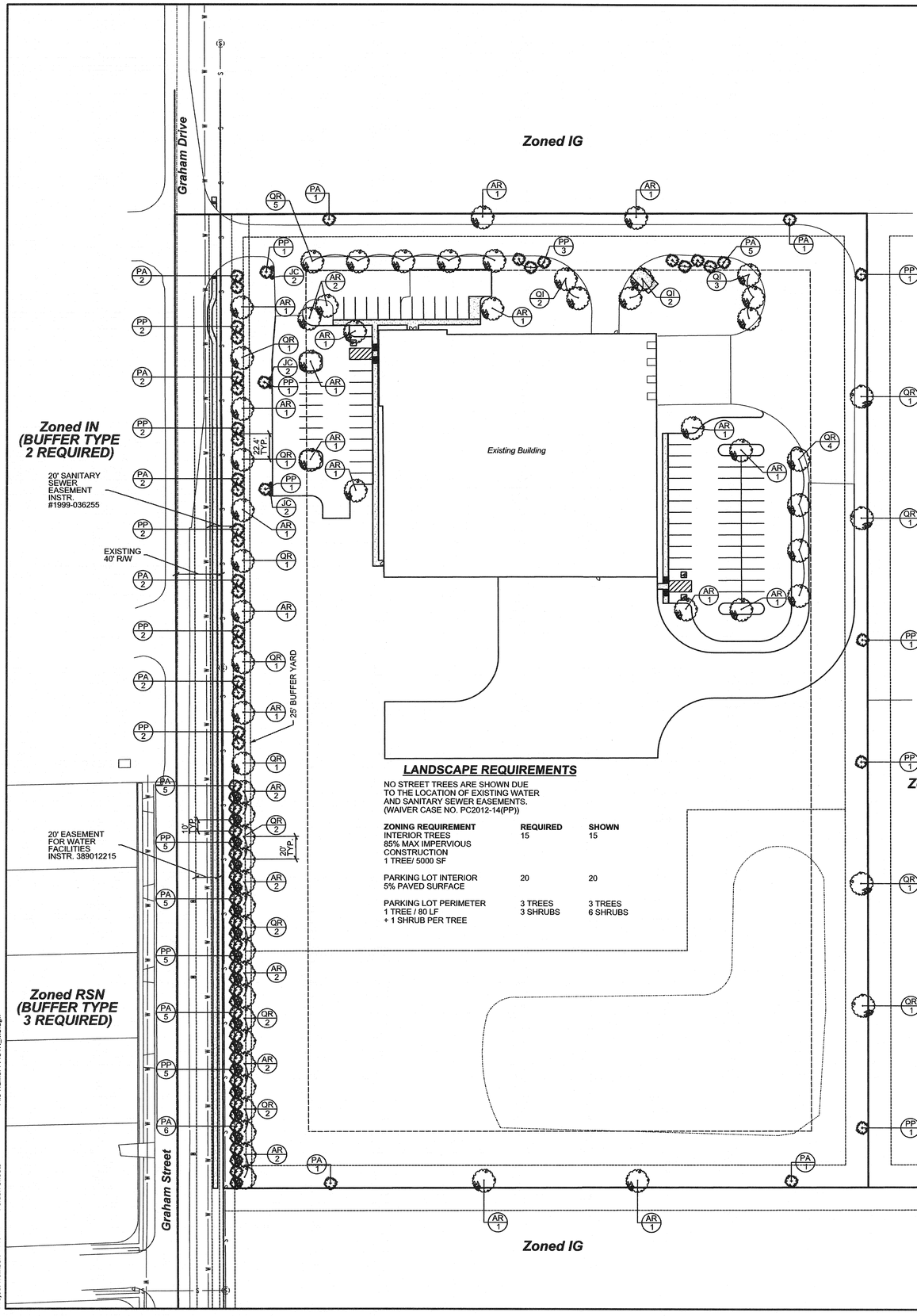

LANDSCAPE REQUIREMENTS

NO STREET TREES ARE SHOWN DUE TO THE LOCATION OF EXISTING WATER AND SANITARY SEWER EASEMENTS. (WAIVER CASE NO. PC2012-14(PP))

ZONING REQUIREMENT	REQUIRED	SHOWN
INTERIOR TREES 85% MAX IMPERVIOUS CONSTRUCTION 1 TREE/ 5000 SF	15	15
PARKING LOT INTERIOR 5% PAVED SURFACE	20	20
PARKING LOT PERIMETER 1 TREE / 80 LF + 1 SHRUB PER TREE	3 TREES 3 SHRUBS	3 TREES 6 SHRUBS

LANDSCAPE SPECIFICATIONS

These specifications cover the furnishing of labor, plants, equipment, and materials to perform landscape operations in connection with this construction project at the locations shown on the landscape drawing.

LANDSCAPE MATERIALS: FERTILIZER:
Granular non-burning product composed of not less than 50% organic slow acting, guaranteed analysis professional fertilizer; 20% nitrogen, 10% phosphoric acid, and 5% potash by weight or similarly approved composition.

PLANTING BACKFILL SOIL:
Backfill plant pits with the following topsoil mixture: 1 part on-site topsoil, 1 part imported topsoil, 1 part compost and 1/2 pound plant specified fertilizer per cubic yard.

PLANT MATERIALS:
Provide trees and shrubs as indicated. Comply with sizing and grading standards of "American Standard for Nursery Stock". Provide only sound, healthy vigorous plants free from defects, disfiguring knots, sunscald injuries, frost cracks, plant diseases, insects or any other form of disease or infestation. All plants shall have fully developed form without voids or open spaces.

PROJECT EXECUTION: SUBSURFACE UTILITIES:
Contractor shall determine utility line locations prior to commencing work. Any conflicts between utility locations, excavation and/or landscape operations shall be brought to Owner's attention prior to commencing excavation and/or grading work. Contractor assumes responsibility for any utility damage resulting from landscape operations. CONTRACTOR SHALL NOTIFY UTILITY LOCATE SERVICE (1.800.382.5544) A MINIMUM OF TWO WORKING DAYS PRIOR TO EXCAVATION.

PLANTING EXCAVATION:
When conditions detrimental to plant growth are encountered, such as rubble fill, adverse drainage or obstructions, notify owner before planting. See planting details for planting, pruning and staking requirements.

SEEDED LAWN:
Complete all other landscape plantings, mulching, fine grading and staking prior to seeding lawn areas. Provide seeded lawn for all lawn areas utilizing Amer-Turf Front-Runner Turf Type Tall Fescue Blend Seed. Apply Seed at a rate of 5 pounds per 1000 square feet. Apply fertilizer at a rate of 4 pounds of actual nitrogen per 1,000 square feet. Spread topsoil over lawn areas to a depth of two inches and cultivate soil to a depth of three inches prior to seeding. Seed bed shall be in a firm but uncompacted condition with a relatively fine texture at time of seeding. Contractor shall maintain seeding lawn for a period of 60 days beyond final acceptance by mowing and watering as required to maintain vigorous growth during establishment period. Lawn areas shall not have voids larger than 6"x6". If voides are larger than acceptable size an overseeding shall be completed by the contractor during the next available growing season.
Fall growing season August 15th - September 20th. Spring growing season March 20th - April 20th.

PROJECT WARRANTY:
Contractor shall warrant trees, shrubs, and plants for a period of two years after date of substantial completion against defects including death and unsatisfactory growth, except for defects resulting from neglect by the Owner, abuse or damage by others, or unusual phenomena or incidents which are beyond installer's control. Remove and replace trees, shrubs or other plants found to be dead or in unhealthy condition during warranty period. Replace trees and shrubs which are in doubtful condition at end of warranty period.

LANDSCAPE SYMBOLOGY

CANOPY TREE

EVERGREEN TREE

AR 20 — SPECIES IDENTIFIER/ PLANT COUNT

0 50' 100'

PLANT LIST

KEY	PLANT NAME BOTANICAL NAME COMMON NAME	SIZE
AR	Acer rubrum Red Maple	2.5" Caliper
JC	Juniperis chinensis 'Sea Green' Sea Green Juniper	24" Height
PA	Picea abies Norway Spruce	5' Height
PP	Picea pungens glauca Colorado Blue Spruce	5' Height
QI	Quercus Inbricaria Shingle Oak	2.5" Caliper
QR	Quercus rubra Red Oak	2.5" Caliper

NOTES:
1. DO NOT DAMAGE MAIN ROOTS OR DESTROY ROOT BALL WHEN INSTALLING TREE STAKE.
2. WATER THOROUGHLY SUBSEQUENT TO INSTALLATION.
3. REMOVE HOSE AND STAKE AT END GUARANTEE PERIOD.

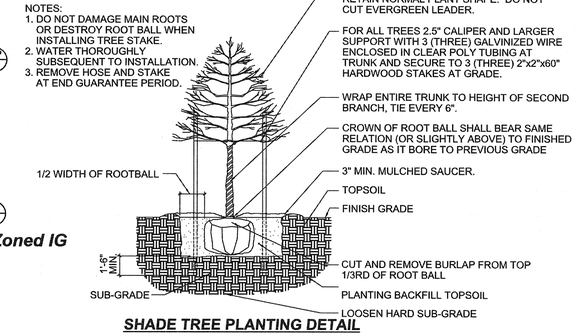

SHADE TREE PLANTING DETAIL
NO SCALE

NOTES:
1. DO NOT DAMAGE MAIN ROOTS OR DESTROY ROOT BALL WHEN INSTALLING TREE STAKE.
2. WATER THOROUGHLY SUBSEQUENT TO INSTALLATION.
3. REMOVE HOSE AND STAKE AT END GUARANTEE PERIOD.

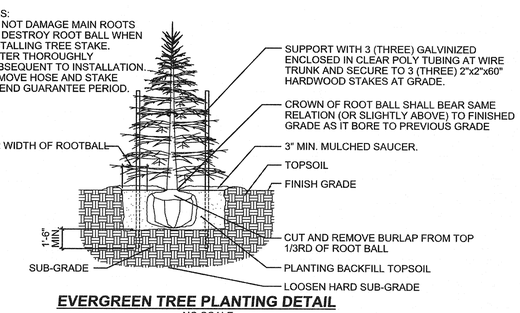

EVERGREEN TREE PLANTING DETAIL
NO SCALE

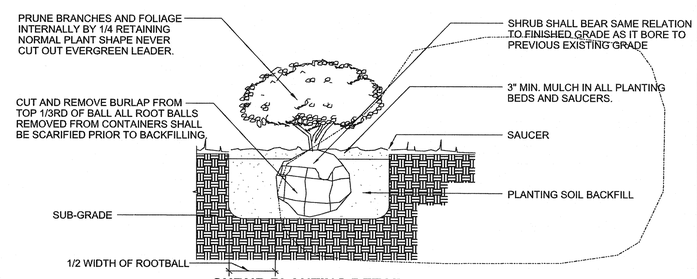

SHRUB PLANTING DETAIL
NO SCALE

Sym.	Revisions	Date

Designed: RRL
Drawn: SJH
Checked:
Scale: 1" = 50'
Date: 10-16-14

LANDSCAPE PLAN
HETSCO, INC.
CITY OF FRANKLIN
JOHNSON COUNTY, INDIANA

WALTER F. REECER III REGISTERED PE 60017777 STATE OF INDIANA PROFESSIONAL ENGINEER
10/16/14

BANNING ENGINEERING
853 COLUMBIA ROAD, SUITE #101
PLAINFIELD, IN 46168
BUS: (317) 707-3700, FAX: (317) 707-3800
E-MAIL: Banning@BanningEngineering.com
WEB: www.BanningEngineering.com

Project No: 11191H
Sheet No: L100

Indiana811 Know what's below. Call before you dig.

File Name: 11191H_ind.dgn
Folder: Sheets
Project Number: 11191H
SCALE: 50.0000 ' / in.
10/15/2014