HOMESTEADS AT HILLVIEW

HOMESTEAD DEVELOPERS, LLC

CITY OF FRANKLIN, INDIANA

DETAILED PUD PLAN – SUPPORTING INFORMATION

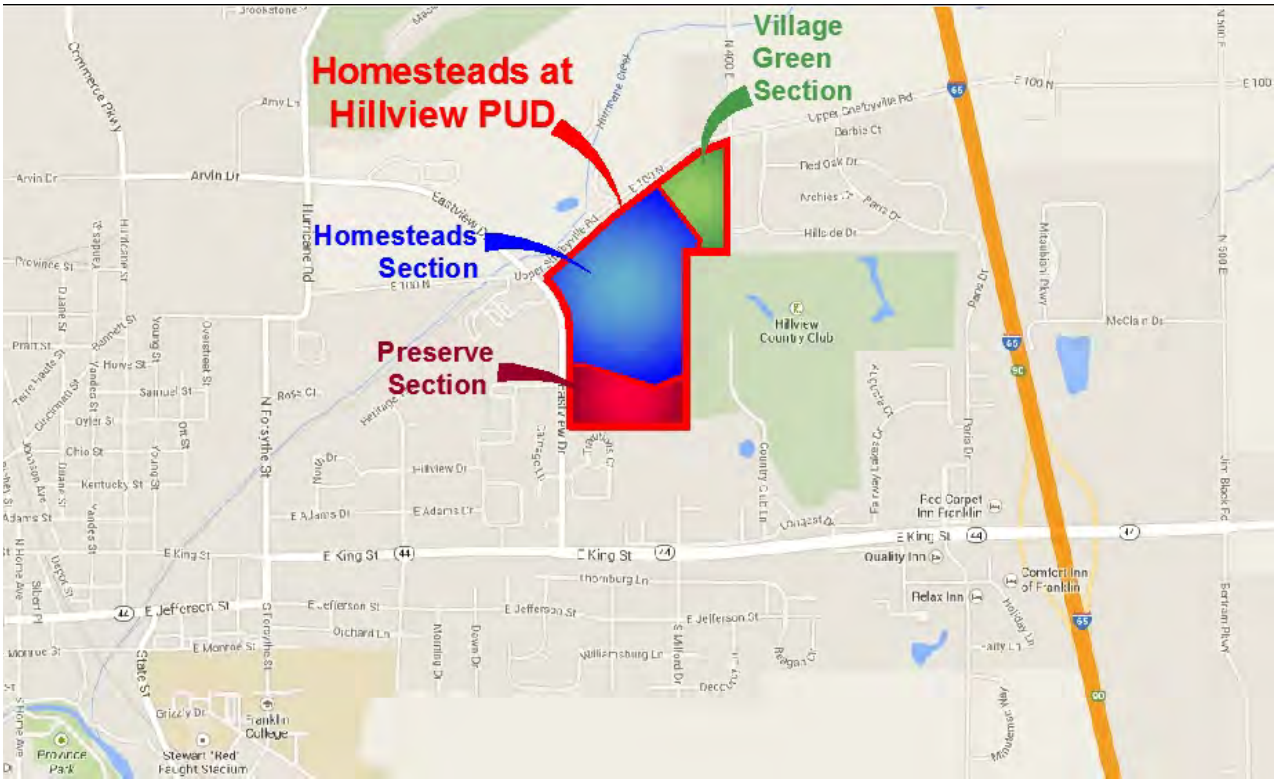

SUBMITTAL DATE: JANUARY 15, 2014

REVISION DATE: FEBRUARY 10, 2014

Prepared by:

CROSSROAD ENGINEERS, PC

3417 Sherman Drive
Beech Grove, Indiana 46107
Gregory J. Ilko, P.E. – (317) 780-1555

HOMESTEADS AT HILLVIEW – DETAILED PUD PLAN

SUPPORTING INFORMATION

January 15, 2014

TABLE OF CONTENTS

PLANNED UNIT DEVELOPMENT DESCRIPTION 3

DEVELOPMENT SUMMARY 3
DEVELOPERS / DESIGN TEAM 3
GENERAL HOLDINGS MAP 3
SEWER VERIFICATION 3

EXISTING SITE CONDITIONS 5

A. BUILT FEATURES 5
B. EASEMENTS 5
C. TOPOGRAPHY 6
D. NATURAL FEATURES 6
E. UTILITIES 6
F. HISTORIC FEATURES 7
G. OTHER FEATURES 7

PROPOSED DEVELOPMENT 8

A. STREET SYSTEMS 8
B. LAND USES 8
C. OPEN SPACE 9
D. LANDSCAPING 9
E. NATURAL FEATURES 10
F. HISTORIC FEATURES 10
G. DEVELOPMENT REQUIREMENTS 11
H. WRITTEN COMMITMENTS 12
I. COVENANTS 12
J. DRAINAGE 12
K. PROJECT PHASING 13

SUPPLEMENTAL INFORMATION 14

A. TREE PRESERVATION 14
B. FLOOD HAZARDS 14
C. ARCHITECTURAL DESIGN STANDARDS 14

EXHIBIT SCHEDULE 16

- *EXHIBIT A- TOPOGRAPHIC SURVEY* 16
- *EXHIBIT B- ALTA / ACSM SURVEY* 16
- *EXHIBIT C- DETAILED PUD PLAN – HOMESTEADS AT HILLVIEW* 16
- *EXHIBIT D- OPEN SPACE EXHIBIT* 16
- *EXHIBIT E- CONCEPTUAL PUD LANDSCAPE PLAN* 16
- *EXHIBIT F– STREET LIGHTING EXAMPLES* 16
- *EXHIBIT G– SIGNAGE EXAMPLES* 16
- *EXHIBIT H– HOMESTEADS AT HILLVIEW WRITTEN COMMITMENTS, COVENANTS AND DECLARATIONS* 16
- *EXHIBIT I– DELETED* 16
- *EXHIBIT J– PRELIMINARY PHASING PLAN* 16
- *EXHIBIT K– GUIDELINES FOR ARCHITECTURAL APPROVAL AND CONSTRUCTION* 16
- *EXHIBIT L– PRELIMINARY PUD ORDINANCE* 16

PLANNED UNIT DEVELOPMENT DESCRIPTION

DEVELOPMENT SUMMARY

Homestead Developers, LLC is proposing to create a single-family residential development with companion golf course use at the southeast corner of Eastview Drive and Upper Shelbyville Road in the City of Franklin, Indiana. The development is to be known as Homesteads at Hillview and will be comprised of three sections: Village Green, Homesteads and Preserve. The three sections will differ in lot sizes and densities. The Village Green Section will constitute approximately 15% of the land area of the development and will feature 33 residential lots that will be the smallest lot sizes within the development. The Homesteads Section will constitute approximately 65% of the land area of the development and will feature 89 larger residential lots approximately 1-1/2 times the size of the lots within Village Green. The Preserve Section will constitute the remaining 20% of land area of the development and will consist of 23 residential lots sized approximately 10% larger than the lots within the Homesteads section. The Preserve will feature 23 of the larger, lower density residential lots. The proposed development and existing site conditions are discussed in detail herein.

DEVELOPERS / DESIGN TEAM

DEVELOPER
Homestead Developers, LLC
% N G Perkins Co. Builders
1521 W. Demaree Road
Greenwood, IN 46143
Phone: (317) 691-3515
Contact: John Grimmer / Gene Perkins

ENGINEER
CrossRoad Engineers, P.C
3417 Sherman Drive
Beech Grove, IN 46107
Phone: (317) 780-1555
Contact: Gregory J. Ilko

DEVELOPMENT MANAGER
Michael J. Duke
4300 N. 725 W.
Bargersville, IN 46106
Phone: (317) 422-9000

LANDSCAPE ARCHITECT
Evergreen Design Group, Inc.
7334 Chapel Hill Road, Suite 102
Raleigh, NC 27607
Phone: (800) 680-6630
Contact: Rodney McNabb

GENERAL HOLDINGS MAP

There are currently no properties adjacent to the Homesteads at Hillview property that are owned by the applicant / owner of record.

SEWER VERIFICATION

The following page contains a Sewer Verification Letter from the City Engineer verifying that the adjacent public sanitary sewer on the south side of Upper Shelbyville Road has sufficient capacity to serve the proposed development.

CAPACITY CERTIFICATION/ALLOCATION LETTER
(This Form Should be Filled Out in its Entirety)

Applicant: Homestead Developers, LLC

Owner: John Grimmer

Project Name: Homesteads at Hillview

I, Rick Littleton (Name of Individual), representing the City of Franklin (Name of City or Town), in my capacity as DPW Superintendent (Title) have the authority to act on behalf of the City of Franklin (Name of City or Town)

and certify that I have reviewed and understand the requirements of 327 IAC 3 and that the sanitary collection system proposed, with the submission of this application, plans and specifications, meets all requirements of 327 IAC 3. I certify that the daily flow generated in the area that will be collected by the project system will not cause overflowing or bypassing in the collection system other than NPDES authorized discharge points and that there is sufficient capacity in the receiving water pollution treatment/control facility to treat the additional daily flow and remain in compliance with applicable NPDES permit effluent limitations. I certify that the proposed average flow will not result in hydraulic or organic overload. I certify that the proposed collection system does not include new combined sewers or a combined sewer extension to existing combined sewers. I certify that the ability for this collection system to comply with 327 IAC 3 is not contingent on water pollution/control facility construction that has not been completed and put into operation. I certify that the project meets all local rules or laws, regulations and ordinances. The information submitted is true, accurate, and complete, to the best of my knowledge and belief. I am aware that there are significant penalties for submitting false information, including the possibility of fine and imprisonment.

Gallons Per Day: 44,950
(Total Average Flow for Project)

Wastewater Treatment Plant: Franklin Municipal WWTP
(Name of WWTP)

Sewers: City of Franklin
(Owner of Sewers)

Signature of Person Signing

02/06/2014
Date Signed

(Please refer to IC 13-30-6-2 for penalties of submission of false information. False certification could result in imprisonment or a fine of up to $10,000)

EXISTING SITE CONDITIONS

The existing project site consists mainly of cultivated agricultural field with only a few areas of clustered trees. There are also two (2) former single family residence sites located on the property, of which, all structures have been razed. The following subsections provide additional information on the existing conditions of the site. Refer to Exhibit A for a Topographic Survey of the project site.

A. BUILT FEATURES

Refer to Exhibit A – Topographic Survey.
The project site is currently undeveloped, and there are no built features (structures, streets, etc.) located on/across the site. Previously, there were two (2) single family homes located on the site; however, these structures have been razed. There is an existing eight (8) feet wide asphalt path located across the northern frontage of the site along the south side of Upper Shelbyville Road. There are existing utility facilities located adjacent to the site, and these utilities will be discussed in more detail in Item E (Utilities) of this section.

B. EASEMENTS

Refer to Exhibit B – ALTA / ACSM Survey
The following existing easements are located on the site:

1. 25 feet wide Sewer Easement – There is a 25 feet wide sewer easement located across the frontage of the site on the south side of Upper Shelbyville Road. The purpose of this easement is to contain and protect the existing sanitary sewer main, and is granted to the City of Franklin.
2. 20 feet wide Water Line Easement – There is a 20 feet wide water line easement located across the frontage of site on the east side of Eastview Drive. The purpose of this easement is to contain and protect the existing water main, and is granted to Indiana American Water Company.
3. Electric Boxes Utility Easement – There is a utility easement located on the east side of Eastview Drive. The purpose of this easement is to contain and protect the existing electric boxes, and is granted to Hoosier Energy Rural Electric Cooperative, Inc.

It is anticipated that all existing easements shall remain intact and no alterations / modifications to those improvements are expected.

C. TOPOGRAPHY

Refer to Exhibit A – Topographic Survey.
The existing topography of the site consists of a grade that is primarily above the existing roads, with a maximum relief of twenty-five (25) feet across the site from east to west. The site includes four (4) main points of drainage discharge from the property. The majority of the site sheet flows towards swales in the middle of the property. The larger southern swale flows east to west and discharges into two (2) 30-inch diameter CMP twin culverts at the intersection of Eastview Drive and Upper Shelbyville Road. The northern swale also flows east to west and discharges into a 24-inch diameter CMP culvert crossing Upper Shelbyville Road, northeast of the twin culverts identified above. The southwest corner of the site discharges by sheet flow to an existing roadside ditch located in the right-of-way of Eastview Drive and then flows north towards Upper Shelbyville Road. Lastly, a small area at the northeast corner of the site discharges from the property by sheet flow to the east. Although there are multiple discharge points from the site, the entire property is located within the Hurricane Creek watershed. As indicated above, the existing site consists mainly of cultivated agricultural field with a few areas of clustered trees.

D. NATURAL FEATURES

Refer to Exhibit A – Topographic Survey.
There are two (2) natural, dry bottom, drainage swales that are present on the site, located in the middle of the property. These are the only defined conveyance points on the property. According to the U.S. Fish and Wildlife Service - National Wetlands Inventory, there are no wetlands present on the site. Also, the vast majority of the property lies within Zone 'X', areas outside of the 0.2% annual chance floodplain, as shown on the Flood Insurance Rate Map (FIRM) for Johnson County, Indiana, Community Panel No. 18081 C 0231D and 18081 C 0232D, dated August 2, 2007. A small portion of the site at the southeast corner of the Eastview Drive and Upper Shelbyville Road intersection does lay within Zone 'AE', special flood hazard areas subject to inundation by the 1% annual chance flood, with base flood elevations (BFE) determined. The BFE within this area is approximately 729.50. There are a few areas of clustered, mature trees across the site, and areas of tree lines along portions of the east and south property lines of site.

E. UTILITIES

The following utilities are located on, or adjacent to, the site:

1. Water – There is an existing 16-inch ductile iron water main across the entire western frontage of the property along the east side of Eastview Drive. There is also a 24-inch / 20-inch ductile iron water main across the entire northern frontage of the property along

the north side of Upper Shelbyville Road. The 24-inch main extends from the intersection to the access road for the Webb Water Treatment Plant, and the 20-inch main extends from the access road to the east. Therefore, it is anticipated that there are water facilities of sufficient capacity available to serve the development. The water utility provider within the project vicinity is Indiana American Water Company.

2. Sanitary – There is an existing 15-inch diameter sanitary main across the northern frontage of the property along the south side of Upper Shelbyville Road. Based upon the topographical survey that has been performed, it is expected that the depth of the existing sanitary sewer is sufficient to service the proposed development with gravity sewer, without the need for any supplemental lift stations. Therefore, there is a sanitary sewer facility readily available to serve the development. The wastewater utility within the project vicinity is the City of Franklin.
3. Electric – There are existing overhead electric facilities across both northern and western frontages of the site, along the east side of Eastview Drive and the north side of Upper Shelbyville Road. There is also an underground facility identified along the west side of Eastview Drive. Therefore, there are sufficient electric facilities readily available to serve the development. The electric utility provider within the project vicinity is Duke Energy.
4. Gas – There is an existing 4-inch plastic gas main across the northern frontage of the property on the north side of the Upper Shelbyville Road. Therefore, there are sufficient gas facilities readily available to serve the development. It has been indicated by the gas utility provider within the project vicinity, Vectren Energy, that an extension of the 4-inch main from the intersection extending south along Eastview Drive is likely to be required for the development.

F. HISTORIC FEATURES

The project site does not contain any known historic features and is not included on the Indiana Historic Sites and Structures Inventory – Johnson County Interim Report.

G. OTHER FEATURES

The design of the development will be influenced by the site being directly adjacent to the Hillview Country Club. Street layout will be accomplished in a manner to provide access to the existing golf course facilities. In addition, common areas will be provided to allow future pedestrian access to the golf course, and ponds will be designed to function with the existing golf course use.

PROPOSED DEVELOPMENT

The proposed development is to include 145 single-family homes with all necessary street, drainage and utility infrastructure. The development will include three (3) separate sections: Village Green, Homesteads, and Preserve. There will be a total of 33 lots within the Village Green section at a density of approximately 2.7 units/acre; 89 larger-sized lots are proposed within the Homesteads section at a density of approximately 1.7 units/acre; and 23 of the largest lots are proposed within the Preserve section at a density of approximately 1.4 units/acre. The overall density of the entire PUD is approximately 1.8 units/acre. Refer to Exhibit C –Detailed PUD Plan – Homesteads at Hillview.

A. STREET SYSTEMS

Refer to Exhibit C – Detailed PUD Plan – Homesteads at Hillview.
The proposed internal subdivision street system will include all local classification streets with two (2) entrances. One entrance will be a boulevard entrance connecting to Eastview Drive, and the other entrance will be a boulevard entrance from Upper Shelbyville Road. A street extension into the existing golf course property will always be provided. All local streets will consist of bituminous pavement with a minimum pavement width of twenty-four (24) feet, and two (2) feet wide concrete roll curbs on each side. All proposed local streets will be contained within a minimum fifty (50) feet wide right-of-way, and will be in conformance with the City of Franklin – Parking on 1-Side Typical Street Detail. Refer to Exhibit C – Detailed PUD Plan – Homesteads at Hillview.

B. LAND USES

The land use of the development will be mostly single-family residential, with a companion golf course use. The Village Green section will be of the highest density and feature smaller lots for no/low maintenance residences. The minimum lot area within the Village Green section will be 8,420 sq.ft (0.193 Ac), with a maximum impervious lot coverage percentage of 67%. There will be a total of 33 lots within the Village Green section at a density of approximately 2.7 units/acre. The Homesteads and Preserve sections will be of lesser density and feature larger estate-sized lots. The minimum lot area within the Homesteads section will be 13,000 sq.ft. (0.298 Ac), with a maximum lot coverage percentage of 60%. There will be a total of 89 lots within the Homesteads section at a density of approximately 1.7 units/acre. The minimum lot area within the Preserve section will be 14,500 sq.ft. (0.333 Ac), with a maximum lot coverage percentage of 60%. There will be a total of 23 lots within the Preserve section at a density of approximately 1.4 units/acre. The overall density of the entire PUD is approximately 1.8 units/acre.

C. OPEN SPACE

Refer to Exhibit D – Open Space Exhibit.
The Homesteads at Hillview development will include 22.591 Ac (28.4% of the total development) of open space / common areas. These areas are spread throughout the development, and can be seen on the enclosed Open Space Exhibit.

D. LANDSCAPING

Refer to Exhibit E – Conceptual PUD Landscape Plan.
Landscaping for the development will consist of bufferyard landscaping, boulevard street landscaping, and landscaping at the entrances to the subdivision. The following landscaped areas will be provided:

- 15 ft. bufferyard with Type 1 plantings (one (1) broad-leaf deciduous canopy tree per thirty (30) feet of boundary) will be provided in a common area behind the double frontage lots on the south side of Upper Shelbyville Road.
- 15 ft. bufferyard with Type 2 plantings (one (1) broad-leaf deciduous canopy tree per twenty-five (25) feet of boundary) will be provided in a common area behind the double frontage lots on the east side of Eastview Drive.
- 15 ft. bufferyard with Type 2 plantings (two (2) evergreen conifers per twenty-five (25) feet of boundary) will be provided in a common area along the south property line of the development.
- 30 ft. bufferyard with a four (4) feet tall undulating earthen mound and a row of evergreen conifers at one (1) evergreen tree per ten (10) feet of boundary will be provided in common areas behind the double frontage lots on both sides of ~~the southern boulevard entrance~~ Homestead Boulevard.
- 20 ft. bufferyard with a three (3) feet tall undulating earthen mound and a row of evergreen conifers at one (1) evergreen tree per ten (10) feet of boundary will be provided in the common area behind the double frontage lots within the Village Green section of the development (Lots 26-33).
- The medians of both boulevard entrances into the development will be landscaped with one (1) non-fruit bearing, ornamental canopy tree per fifty (50) feet of median.
- Both entrances will also include additional landscaping around the proposed development signage.
- Street tree landscaping requirements for all internal streets within the development will be satisfied by the following individual lot landscaping requirements that will be completed as the development is built out. No street tree plantings will be required along Eastview Drive and Upper Shelbyville Road. Each lot is required to have a minimum planting requirement of the following:

- Front and Side Yard**

2 Deciduous Shade Trees	2 – 2-1/2" caliper
1 Flowering Tree	1 – 1-1/2" caliper
3 Conifer Trees	6 – 8' height
6 Shrubs	3 – 4' height
10 Shrubs	18 – 24" spread

** Two (2) of the required deciduous tree plantings above shall be located ~~within~~ in the front yard of each lot, at a maximum distance of fifteen (15) feet from the Right-of-Way.

- Landscaping will also be provided by existing trees, as ~~the tree preservation limits for the project will include~~ healthy, mature trees within common areas on both sides of the northern boulevard entrance from Upper Shelbyville Road, and within the common area at the southeast corner of the Eastview Drive and Upper Shelbyville Road intersection that can be preserved by the project, will be preserved.

All landscaping, including tree/shrub plantings and berms/mounding, will be installed in compliance with Chapter 7 of the City of Franklin Zoning Ordinance. Tree selection shall be in conformance with the "Qualifying Broad Leaf / Deciduous Trees List" and "Non-Qualifying Trees List" within Section 7.16 of the City of Franklin Zoning Ordinance.

E. NATURAL FEATURES

As discussed in the existing site conditions section, a small portion of the site at the southeast corner of the Eastview Drive and Upper Shelbyville Road intersection lies within Zone 'AE', special flood hazard areas subject to inundation by the 1% annual chance flood, with base flood elevations determined. This area of the site will be maintained and the contours will be unaltered. Any asphalt path installation in this area will be constructed to not negatively impact the 100-year flood elevation. Also, the receiving culverts for the existing drainage swales will be maintained and preserved. Any off-site drainage areas will be managed by the development's proposed drainage facilities. Lastly, common areas will be provided to protect all possible existing trees.

F. HISTORIC FEATURES

The existing project site does not contain any historic features, and is not included on the Indiana Historic Sites and Structures Inventory – Johnson County Interim Report; therefore, no accommodations are required for the proposed development.

G. DEVELOPMENT REQUIREMENTS

LOT STANDARDS:

VILLAGE GREEN

Min. Lot Area = 8,420 sq.ft.
Max. Lot Area = N/A (same as RS-1 standards)
Min. Lot Width (*measured at front setback line*) = 57.66' = 57'
Max. Lot Depth = N/A (same as RS-1 standards)
Max. Lot Coverage = 67%
Min. Front Yard Setback = 20' when adjacent to a Local Street (same as RS-1 standards)
Min. Side Yard Setback = 5' (primary structure) / 5' (accessory structure)
Min. Rear Yard Setback = 15' (primary structure) / 5' (accessory structure)
Min. Living Area per Dwelling = 1,700 sq.ft.
~~Min. Ground Floor Living Area = 40% (same as RS-1 standards)~~
Max. Primary Structures per Lot = 1 (same as RS-1 standards)
Max. Height for Primary Structures = 48' (same as RS-1 standards)
~~No accessary structures will be permitted~~

HOMESTEAD

Min. Lot Area = 13,000 sq.ft.
Max. Lot Area = N/A (same as RS-1 standards)
Min. Lot Width (*measured at front setback line*) = 63.81' = 63'
Max. Lot Depth = N/A (same as RS-1 standards)
Max. Lot Coverage = 60% (Calculations shown below)
Min. Front Yard Setback = 20' when adjacent to a Local Street (same as RS-1 standards)
Min. Side Yard Setback = 10' (primary structure) / 5' (accessory structure)
Min. Rear Yard Setback = 25' (primary structure) / 5' (accessory structure)
Min. Living Area per Dwelling = 1,800 sq.ft.
~~Min. Ground Floor Living Area = 40% (same as RS-1 standards)~~
Max. Primary Structures per Lot = 1 (same as RS-1 standards)
Max. Height for Primary Structures = 48' (same as RS-1 standards)
~~No accessary structures will be permitted~~

PRESERVE

Min. Lot Area = 14,500 sq.ft.
Max. Lot Area = N/A (same as RS-1 standards)
Min. Lot Width (*measured at front setback line*) = 63.81' = 63'
Max. Lot Depth = N/A (same as RS-1 standards)
Max. Lot Coverage = 60% (Calculations shown below)
Min. Front Yard Setback = 20' when adjacent to a Local Street (same as RS-1 standards)
Min. Side Yard Setback = 10' (primary structure) / 5' (accessory structure)
Min. Rear Yard Setback = 25' (primary structure) / 5' (accessory structure)
Min. Living Area per Dwelling = 1,800 sq.ft.
~~Min. Ground Floor Living Area = 40% (same as RS-1 standards)~~

Max. Primary Structures per Lot = 1 (same as RS-1 standards)
Max. Height for Primary Structures = 48' (same as RS-1 standards)
~~No accessary structures will be permitted~~

LIGHTING STANDARDS:
Street lighting for the development shall be in accordance with Section 7.18 of the City of Franklin Zoning Ordinance, the Homesteads at Hillview Rules and Regulations, and the Guidelines for Architectural Approval and Construction. Refer to Exhibit C – Detailed PUD Plan – Homesteads at Hillview for a typical layout of street lighting throughout the development. Actual locations of street lighting may be revised as detailed construction plans for the developed are completed. Refer to Exhibit F – Street Lighting Examples for typical street lights for the development.

SIGNAGE STANDARDS:
Signage for the development shall be in accordance with the PUD Ordinance 2014-___, Homesteads at Hillview Rules and Regulations, the Guidelines for Architectural Approval and Construction, and if not covered within these documents, Article 8 of the City of Franklin Zoning Ordinance . Signage for the development shall consist of entry signage for the development on both sides of Homestead Boulevard at the intersection of Eastview Drive and on both sides of Meadowbrook Lane at the intersection of Upper Shelbyville Road. The signs may be a maximum of eight (8) feet tall in height, and a maximum of forty-eight (48) square feet per entry sign. Also, there will be neighborhood marker posts for signage of the three (3) sections of the development, and street signage throughout the development. Refer to Exhibit C – Detailed PUD Plan – Homesteads at Hillview for a typical layout of signage throughout the development. Actual signage locations and quantities may be revised as detailed construction plans for the developed are completed. Refer to Exhibit G – Signage Examples for typical entry signs, neighborhood marker posts, and street signage for the development.

H. WRITTEN COMMITMENTS

Draft copies of the proposed written commitments for the Homesteads at Hillview development are included within Exhibit H – Homesteads at Hillview Written Commitments.

I. COVENANTS

Draft copies of the proposed written commitments for the Homesteads at Hillview development are included within Exhibit I – Homesteads at Hillview Covenants.

J. DRAINAGE

Stormwater quantity and quality requirements of Section 6.19 of the City of Franklin Subdivision Control Ordinance will be satisfied by the installation of four (4) on-site wet

detention ponds with restrictive outlet control measures. All on-site impervious areas will be routed to, and treated by, the proposed ponds. All ponds will have an ultimate discharge into existing, working outlet points, including two (2) existing road culverts and an existing roadside ditch. To achieve water quantity detention standards, the pond and associated outlet structure will be sized to restrict the peak discharge rate of the 10-year post-developed storm to the peak 2-year pre-developed rate, and the peak discharge rate of the 100-year post-developed storm to the peak 10-year pre-developed rate. In addition, to achieve water quality standards, the ponds will also be designed to detain, for over 24 hours after the peak runoff from a 24-hour storm, at least 20% of the runoff from either a 1-1/4 inch rainfall depth storm or 1/2 inch direct runoff, whichever is greater. Please refer to the Preliminary Stormwater Calculations included within the Primary Plat submittal for all detention and water quality modeling and calculations. The wet detention ponds have been preliminarily designed to meet all requirements of Section 6.19, G and H of the Franklin SCO. Additionally, the on-site storm sewer will be designed in accordance with Section 6.19, A, C, E and F. The following is a summary indicating that the post-developed discharge rates from the development will be less than the allowable release rates, per the Franklin SCO:

ALLOWABLE DISCHARGE RATE
Allowable Discharge Rate for the 10-year post-development storm = **25.97 cfs**
Allowable Discharge Rate for the 100-year post-development storm = **76.39 cfs**

TOTAL POST-DEVELOPED DISCHARGE RATE
Post-Developed 10-Year Discharge Rate = **22.80 cfs** < **25.97 cfs** (allowable)
Post-Developed 100-Year Discharge Rate = **57.94 cfs** < **76.39 cfs** (allowable)

K. PROJECT PHASING

Refer to Exhibit J – Preliminary Phasing Plan.
Market conditions at the time of construction commencement of the Homesteads at Hillview development will dictate the order of development. However, it is anticipated that Phase #1 of the development will include the entire Village Green section (Lots 1-33); ~~Lots 23, 67 – 75, and 76 – 81~~ a portion of the Homesteads section (Lots 34, 65-70 and 114-122; the connection of Meadowbrook Lane to Upper Shelbyville, Road, Detention Pond #1; and all associated street and utility infrastructure. Next, it is anticipated that Phase #2 of the development will include the remainder of the lots within the Homesteads section; the connection of Homestead Boulevard to Eastview Drive; Detention Ponds #2 and #3; and all associated street and utility infrastructure. Lastly, it is anticipated that Phase #3 will include the entire Preserve section; Detention Pond #4; and all associated street and utility infrastructure.

SUPPLEMENTAL INFORMATION

A. TREE PRESERVATION

All existing, healthy, mature trees that can be preserved by the project will be preserved. Specifically, tree preservation limits will be provided on both sides of the proposed entrance from Upper Shelbyville Road. There are multiple mature trees that are located within this area that previously surrounded the former residences. Also, tree preservation limits will be provided at the southeast corner of the Eastview Drive and Upper Shelbyville Road intersection. These preservation limits will be protected by platted common areas.

B. FLOOD HAZARDS

As discussed in the existing site conditions section, a small portion of the site at the southeast corner of the Eastview Drive and Upper Shelbyville Road intersection lies within Zone 'AE', special flood hazard areas subject to inundation by the 1% annual chance flood, with base flood elevations determined. The site will be designed so that the existing contours will be unaltered within the floodplain area, or the storage volume within the floodplain will be maintained. Any filling necessary to install the required asphalt path in this area will be accomplished without raising the regulatory flood elevation by more than 0.1 feet.

C. ARCHITECTURAL DESIGN STANDARDS

Proposed architectural design standards for the Homesteads at Hillview development are as follows:

Residential Features and Standards

- Minimum Living Area per Unit:

  VILLAGE GREEN –

  1700 square feet for a ranch style

  2000 square feet in the aggregate for a multi-story residence but no less than 1200 square foot on the ground floor

  HOMESTEAD –

  1800 square feet for a ranch style

  2200 square feet in the aggregate for a multi-story residence but no less than 1400 square feet on the ground floor

PRESERVE –

1800 square feet for a ranch style

2200 square feet in the aggregate for a multi-story residence but no less than 1400 square feet on the ground floor

- Fence, Hedge & Wall Standards

  All fence, hedge and wall standards shall be in accordance with Section II.1 – FENCES, WALLS, and SCREENING of Exhibit K - Guidelines for Architectural Approval and Construction, and all Homesteads at Hillview Rules and Regulations

- Garage:

  No less than a two-car garage.

  All garages with vehicle entrances (garage doors) that face a public street on which the lot has frontage shall not be required to have a minimum or maximum distance offset behind the setback provided by the living area of the residence. Garages will be permitted to be offset either in front of, or behind, the living area of the residence.

- Entry Porches:

  There shall be no required minimum or maximum length or depth of entry porch for all dwelling units within the development.

- Primary Roof Pitch for New Residences - 8/12 minimum

- Exterior Materials - Brick, stone, cedar, EIFs, hardy plank and dimensional fiberglass shingles consistent in earthen tone coloration and otherwise with the projects interior theme of a custom themed community.

Refer to Exhibit K - Guidelines for Architectural Approval and Construction for additional architectural requirements for the development.

EXHIBIT SCHEDULE

- **EXHIBIT A-** Topographic Survey
- **EXHIBIT B-** ALTA / ACSM Survey
- **EXHIBIT C-** Detailed PUD Plan – Homesteads at Hillview
- **EXHIBIT D-** Open Space Exhibit
- **EXHIBIT E-** Conceptual PUD Landscape Plan
- **EXHIBIT F**– Street Lighting Examples
- **EXHIBIT G**– Signage Examples
- **EXHIBIT H**– Homesteads at Hillview Written Commitments, Covenants and Declarations
- **EXHIBIT I**– DELETED
- **EXHIBIT J**– Preliminary Phasing Plan
- **EXHIBIT K**– Guidelines for Architectural Approval and Construction
- **EXHIBIT L**– Preliminary PUD Ordinance

- **EXHIBIT A-** Topographic Survey

TOPOGRAPHICAL NOTES

1. CONTRACTOR SHALL DISPOSE OF ALL MATERIALS IN ACCORDANCE WITH FEDERAL, STATE, AND LOCAL REGULATIONS.
2. UTILITIES ARE GRAPHICAL REPRESENTATION PER SURVEY AND MAPPING. CONTRACTOR SHALL FIELD VERIFY ALL UTILITIES PRIOR TO CONSTRUCTION.
3. REMOVE EXISTING RESIDENTIAL STRUCTURE. WELLS AND SEPTIC SYSTEMS SHALL BE ABANDON PER ALL FEDERAL, STATE, AND LOCAL REGULATIONS. A REPRESENTATIVE FROM THE DAVIESS COUNTY HEALTH DEPARTMENT SHALL BE PRESENT DURING REMOVAL OPERATIONS. CONTRACTOR SHALL BE RESPONSIBLE FOR ALL HAZARDOUS MATERIAL TESTING AND REMOVAL (IF DEEMED NECESSARY) FOR THE EXISTING STRUCTURES.
4. CONTRACTOR SHALL COORDINATE WITH APPLICABLE UTILITY COMPANIES FOR SERVICE DIS-CONNECTIONS.

FLOODPLAIN INFORMATION

THE PROPERTY PLOTS BY SCALE AS BEING IN ZONE "AE" & "Z" OF THE FLOOD INSURANCE RATE MAP (FIRM) FOR JOHNSON COUNTY, INDIANA, COMMUNITY PANEL NO. 18081 C 0232D, DATED AUGUST 2, 2007. THE ACCURACY OF ALL FLOOD HAZARD DATA SHOWN ON THIS PROJECT IS SUBJECT TO MAP SCALE UNCERTAINTY AND TO ANY OTHER UNCERTAINTY IN LOCATION OF ELEVATION ON THE RECORDED FLOOD INSURANCE RATE MAP.

BENCHMARK INFORMATION

BENCHMARK – JON 6 – ELEVATION 721.534 FEET
IN JOHNSON COUNTY, FRANKLIN QUADRANGLE, IN THE SOUTHEAST QUARTER OF SECTION 14, TOWNSHIP 12 NORTH, RANGE 4 EAST, SECOND PRINCIPAL MERIDIAN; AT FRANKLIN; 0.2 NORTH ALONG FORSYTHE STREET FROM ITS INTERSECTION WITH STATE ROAD 44 TO AN ELECTRIC TOWER; SET IN THE TOP OF THE SOUTHWEST CONCRETE SUPPORT OF THE ELECTRIC POWER TAKE OFF TOWER, 110 FEET EAST OF THE CENTERLINE OF FORSYTHE STREET, 50 FEET SOUTH OF HURRICANE CREEK, 1.0 FOOT ABOVE THE GROUND; AN INDIANA FLOOD CONTROL AND WATER RESOURCES COMMISSION BRASS CONTROL STATION TABLET, STAMPED "JON 6"

EXISTING UTILITY SIZE AND MATERIAL INFORMATION SHOWN ON THESE PLANS ARE PER THE BEST GRAPHICAL AND VISIBLE INFORMATION AVAILABLE. CONFLICTS MAY EXIST AND IT SHALL BE THE CONTRACTOR'S RESPONSIBILITY TO FIELD VERIFY ALL SIZING AND MATERIAL INFORMATION PROVIDED. IF ACTUAL CONDITIONS DIFFER FROM THAT INFORMATION SHOWN ON THE PLANS, THE CONTRACTOR SHALL, PRIOR TO THE INSTALLATION OF ANY PROPOSED INFRASTRUCTURE, NOTIFY THE DESIGN ENGINEER IMMEDIATELY.

THESE PLANS ARE BASED UPON INFORMATION FROM AN ALTA/ACSM LAND TITLE SURVEY PERFORMED BY CKW LAND SURVEYING, INC. WITH WORK ORDER NO. 130100 AND DATED JUNE 7, 2013 AND SURVEY INFORMATION PROVIDED BY JERRY MIGGINS SURVEYING.

EXISTING LEGEND

POWERPOLE W/LIGHT
POWERPOLE GROUND
POWERPOLE UTILITY
POWERPOLE
LIGHTPOLE
ELECTRIC MANHOLE
ELECTRIC CABINET
GUYWIRE
TELEPHONE RISER
WATER METER
FIRE HYDRANT
WATER VALVE
SANITARY MANHOLE
SIGN
TREE
TEMP. BENCHMARK
MONUMENT FOUND

CONTOURS
PROPERTY LINE
SECTION LINE
RIGHT-OF-WAY
ADJOINER LINE
PAVEMENT LINE
EASEMENT LINE
FLOODPLAIN LINE
DITCH LINE
FARM FIELD FENCE
GUARDRAIL
ELECTRIC LINE
WATER LINE
STORM SEWER LINE
SANITARY SEWER LINE
TREE LINE

ASPHALT
BUILDING
CONCRETE
REMOVAL/DEMOLISH

LEGAL DESCRIPTION

LAND DESCRIPTION: INSTRUMENT NUMBER 97013506
PART OF TBE SOUTHEAST QUARTER OF SECTION 12 AND PART OR THE NORTHEAST QUARTER OF SECTION 13, ALL IN TOWNSHIP 12 NORTH, RANGE 4 EAST OF THE SECOND PRINCIPAL MERIDIAN IN JOHNSON COUNTY, INDIANA, DESCRIBED AS FOLLOWS:
BEGINNING AT STONE FOUND AT THE NORTHEAST CORNER OF THE NORTHEAST QUARTER OF THE NORTHEAST QUARTER OF THE SAID SECTION 13; THENCE SOUTH 00 DEGREES 07 MINUTES 53 SECONDS EAST ON AND ALONG THE EAST LINE THEREOF 432.04 FEET; THENCE SOUTH 89 DEGREES 23 MINUTES 00 SECONDS WEST 476.12 FEET TO AN IRON ROD FOUND; THENCE SOUTH 00 DEGREES 06 MINUTES 47 SECONDS EAST 1811.11 FEET TO AN IRON ROD FOUND; THENCE NORTH 87 DEGREES 11 MINUTES 04 SECONDS WEST 588.67 FEET TO AN IRON ROD FOUND; THENCE NORTH 86 DEGREES 14 MINUTES 12 SECONDS WEST 647.24 FEET TO AN IRON ROD FOUND AT THE EAST RIGHT-OF-WAY LINE OF EASTVIEW DRIVE; THENCE NORTH 00 DEGREES 16 MINUTES 00 SECONDS EAST ON AND ALONG THE SAID EAST RIGHT-OF-WAY LINE 438.05 FEET TO A RIGHT-OF-WAY FENCE POST; THENCE NORH 01 DEGREE 43 MINUTES 40 SECONDS EAST ON AND ALONG THE SAID RIGHT-OF-WAY LINE 391.75 FEET TO AN IRON ROD SET; THENCE NORTHWESTERLY ON AND ALONG THE SAID RIGHT-OF-WAY LINE ON A CURVE TO THE LEFT WHICH HAS A RADIUS OF 850.0 FEET A CURVED DISTANCE OF 646.40 FEET, SAID ARC BEING SUBTENDED BY A CHORD BEARING NORTH 21 DEGREES 31 MINUTES 10 SECONDS WEST 630.94 FEET TO AN IRON ROD SET; THENCE NORTH 01 DEGREE 40 MINUTES 58 SECONDS EAST ON AND ALONG THE SAID RIGHT-OF-WAY LINE 181.00 FEET TO A "P-K" NAIL SET IN THE CENTERLINE OF UPPER SHELBYVILLE ROAD; THENCE NORTHEASTERLY ON AND ALONG THE SAID CENTERLINE ON A CURVE TO THE LEFT WHICH HAS A RADIUS OF 450.00 FEET A CURVED DISTANCE OF 40.32 FEET, SAID ARC BEING SUBTENDED BY A CHORD BEARING NORTH 46 DEGREES 12 MINUTES 19 SECONDS EAST 40.31 FEET; THENCE NORTH 43 DEGREES 38 MINUTES 17 SECONDS EAST ON AND ALONG THE SAID CENTERLINE 482.28 FEET TO THE BEGINNING OF A TANGENT CURVE; THENCE NORTHEASTERLY ON AND ALONG THE SAID CENTERLINE ON A CURVE TO THE RIGHT WHICH HAS A RADIUS OF 2136.39 FEET A CURVED DISTANCE OF 370.49 FEET, SAID ARC BEING SUBTENDED BY A CHORD BEARING NORTH 48 DEGREES 36 MINUTES 22 SECONDS EAST 370.02 FEET; THENCE NORTH 53 DEGREES 34 MINUTES 27 SECONDS EAST ON AND ALONG THE SAID CENTERLINE 343.77 FEET TO A "P-K" NAIL SET; THENCE SOUTH 30 DEGREES 18 MINUTES 33 SECONDS EAST 200.00 FEET TO A "P-K" NAIL SET; THENCE SOUTH 53 DEGREES 34 MINUTES 27 SECONDS EAST 218.13 FEET; THENCE NORTH 30 DEGREES 18 MINUTES 33 SECONDS WEST 200.00 FEET TO A "P-K" NAIL SET IN THE CENTERLINE OF UPPER SHELBYVILLE ROAD; THENCE NORTH 53 DEGREES 34 MINUTES 27 SECONDS EAST ON AND ALONG SAID CENTERLINE 453.20 FEET TO THE BEGINNING POINT OF A TANGENT CURVE; THENCE NORTHEASTERLY ON AND ALONG THE SAID CENTERLINE ON A CURVE TO THE RIGHT WHICH HAS A RADIUS OF 772.90 FEET A CURVED DISTANCE OF 323.41 FEET, SAID ARC BEING SUBTENDED BY A CHORD BEARING NORTH 65 DEGREES 33 MINUTES 41 SECONDS EAST 321.05 FEET; THENCE NORTH 77 DEGREES 32 MINUTES 55 SECONDS EAST ON AND ALONG THE SAID CENTERLINE 173.04 FEET TO A RAILROAD SPIKE FOUND ON THE EAST LINE OF THE SOUTHEAST QUARTER OF THE SAID SECTION 12; THENCE SOUTH 00 DEGREES 05 MINUTES 14 SECONDS EAST ON AND ALONG THE SAID EAST LINE 815.10 FEET TO THE POINT OF BEGINNING, CONTAINING 81.4626 ACRES, MORE OR LESS.

MODERNIZED LEGAL DESCRIPTION: JOHNSON COUNTY LAND TITLE COMMITMENT NO. 13-6331I
A PART OF THE SOUTHEAST QUARTER OF SECTION 12, AND PART OF THE NORTHEAST QUARTER OF SECTION 13, ALL IN TOWNSHIP 12 NORTH, RANGE 4 EAST OF THE SECOND PRINCIPAL MERIDIAN, IN JOHNSON COUNTY, INDIANA, MORE PARTICULARLY DESCRIBED AS FOLLOWS:
COMMENCING AT A STONE FOUND AT THE NORTHEAST CORNER OF THE NORTHEAST QUARTER OF THE SAID SECTION 13; THENCE SOUTH 00 DEGREES 07 MINUTES 53 SECONDS EAST ON AND ALONG THE EAST LINE THEREOF 432.04 FEET; THENCE SOUTH 89 DEGREES 23 MINUTES 00 SECONDS WEST 107.32 FEET TO AN IRON ROD FOUND AT THE POINT OF BEGGING OF THIS DESCRIBED TRACT; THENCE CONTINUING SOUTH 89 DEGREES 23 MINUTES 00 SECONDS WEST 368.31; THENCE SOUTH 00 DEGREES 06 MINUTES 47 SECONDS EAST 1811.1 FEET TO AN IRON ROD FOUND; THENCE NORTH 87 DEGREES 11 MINUTES 04 SECONDS WEST 588.67 FEET TO AN IRON ROD FOUND; THENCE NORTH 86 DEGREES 14 MINUTES 12 SECONDS WEST 647.24 FEET TO AN IRON ROD FOUND AT THE EAST RIGHT-OF-WAY OF EASTVIEW DRIVE; THENCE NORTH 00 DEGREES 16 MINUTES 00 SECONDS EAST ON AND ALONG THE SAID EAST RIGHT-OF-WAY LINE 438.05 FEET TO A RIGHT-OF-WAY FENCE POST; THENCE NORTH 01 DEGREES 43 MINUTES 40 SECONDS EAST ON AND ALONG THE SAID RIGHT-OF-WAY LINE 391.75 FEET TO AN IRON ROD SET; THENCE NORTHWESTERLY ON AND ALONG THE SAID RIGHT-OF-WAY ON A CURVE TO THE LEFT WHICH HAS A RADIUS OF 850.00 FEET A CURVED DISTANCE OF 646.40 FEET, SAID ARC BEING SUBTENDED BY A CORD BEARING NORTH 21 DEGREES 31 MINUTES 10 SECONDS WEST 630.94 FEET TO AN IRON ROD SET; THENCE NORTH 01 DEGREES 40 MINUTES 58 SECONDS EAST ON AND ALONG THE SAID RIGHT-OF-WAY LINE 181.00 FEET TO A "P-K" NAIL SET IN THE CENTERLINE OF UPPER SHELBYVILLE ROAD; THENCE NORTHEASTERLY ON AND ALONG THE SAID CENTERLINE ON A CURVE TO THE LEFT WHICH HAS A RADIUS OF 450.00 FEET A CURVED DISTANCE OF 40.32 FEET, SAID ARC BEING SUBTENDED BY A CHORD BEARING NORTH 46 DEGREES 12 MINUTES 19 SECONDS EAST 40.31 FEET; THENCE NORTH 43 DEGREES 38 MINUTES 17 SECONDS EAST ON AND ALONG THE SAID CENTERLINE 482.28 FEET TO THE BEGINNING OF A TANGENT CURVE; THENCE NORTHEASTERLY ON AND ALONG THE SAID CENTERLINE ON A CURVE TO THE RIGHT WHICH HAS A RADIUS OF 2136.39 FEET A CURVED DISTANCE OF 370.49 FEET, SAID ARC BEING SUBTENDED BY A CHORD BEARING NORTH 48 DEGREES 36 MINUTES 22 SECONDS EAST 370.02 FEET; THENCE NORTH 53 DEGREES 34 MINUTES 27 SECONDS EAST ON AND ALONG THE SAID CENTERLINE 343.77 FEET TO A "P-K" NAIL SET; THENCE SOUTH 30 DEGREES 18 MINUTES 33 SECONDS EAST 200.00 FEET; THENCE NORTH 53 DEGREES 34 MINUTES 27 SECONDS EAST 218.13 FEET; THENCE NORTH 30 DEGREES 18 MINUTES 33 SECONDS WEST 200.00 FEET TO A "P-K" NAIL SET IN THE CENTERLINE OF UPPER SHELBYVILLE ROAD; THENCE NORTH 53 DEGREES 34 MINUTES 27 SECONDS EAST ON AND ALONG SAID CENTERLINE 453.20 FEET TO THE BEGINNING POINT OF A TANGENT CURVE; THENCE NORTHEASTERLY ON AND ALONG THE SAID CENTERLINE ON A CURVE TO THE RIGHT WHICH HAS A RADIUS OF 772.90 FEET A CURVED DISTANCE OF 323.41 FEET, SAID ARC BEING SUBTENDED BY A CHORD BEARING NORTH 65 DEGREES 33 MINUTES 41 SECONDS EAST 321.05 FEET; THENCE NORTH 77 DEGREES 32 MINUTES 55 SECONDS EAST 63.16 FEET; THENCE SOUTH 00 DEGREES 04 MINUTES 54 SECONDS WEST 791.25; THENCE SOUTH 00 DEGREES 13 MINUTES 11 SECONDS EAST 433.11 FEET TO THE POINT OF BEGINNING, CONTAINING 79.38 ACRES, MORE OR LESS.
CONTAINING 79.38 ACRES, MORE OR LESS; AND BEING SUBJECT TO ALL LEGAL EASEMENTS, RIGHTS OF WAY OR RESTRICTIONS OF RECORD OR OBSERVABLE.

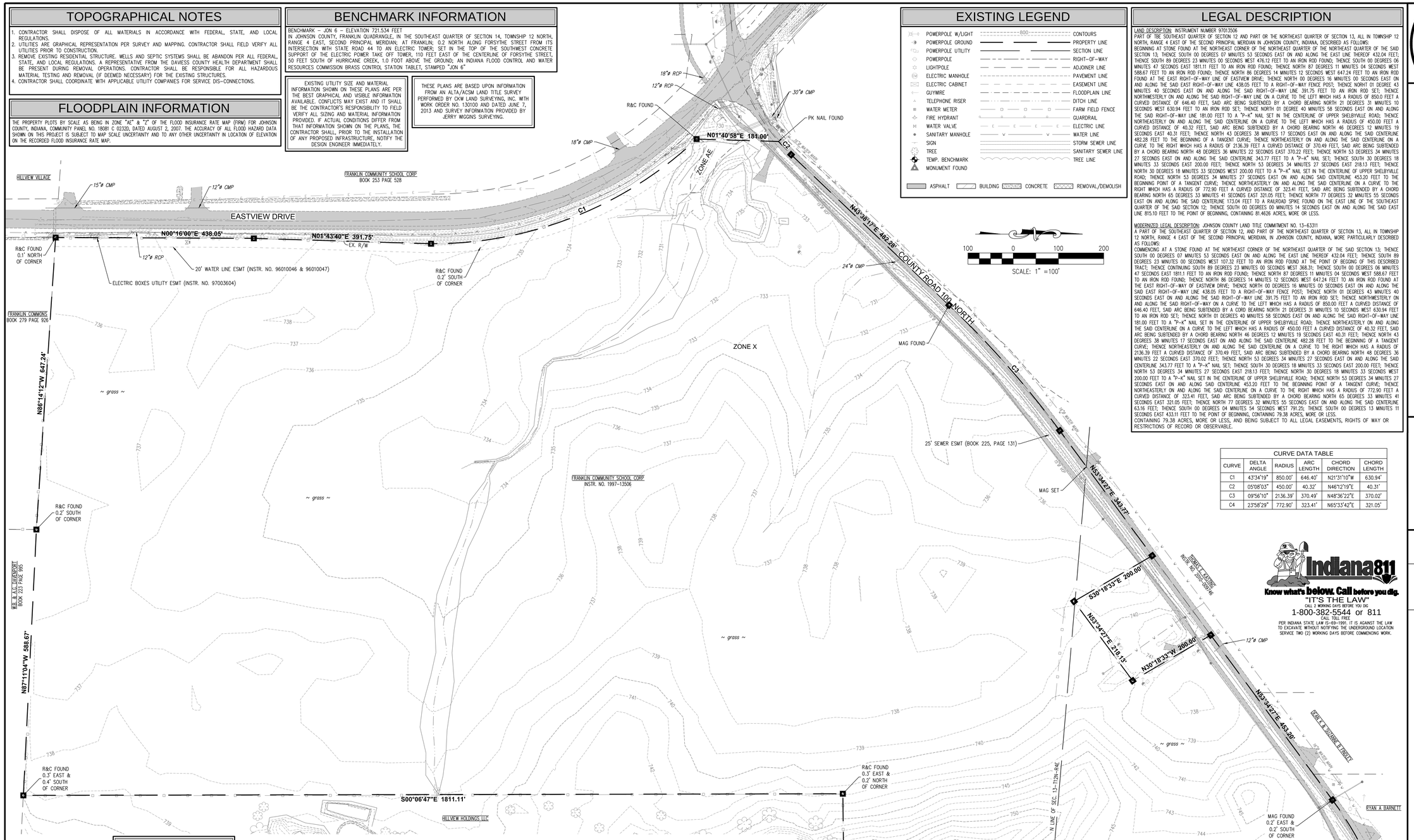

UTILITIES

Note: Listed below are the Indiana Underground Plant Protection Services Contacts; Others not listed may exist.

SEWER	WATER	CABLE
NAME	NAME	NAME
ADDRESS	ADDRESS	ADDRESS
PHONE: (317)	PHONE: (317)	PHONE: (317)
FAX: (317)	FAX: (317)	FAX: (317)
CONTACT:	CONTACT:	CONTACT:
GAS	**TELEPHONE**	**ELECTRIC**
NAME	NAME	NAME
ADDRESS	ADDRESS	ADDRESS
PHONE: (317)	PHONE: (317)	PHONE: (317)
FAX: (317)	FAX: (317)	FAX: (317)
CONTACT:	CONTACT:	CONTACT:
	FIRE DEPARTMENT	
	NAME	
	ADDRESS	
	PHONE: (317)	
	FAX: (317)	
	CONTACT:	

NOTE: The underground utilities shown have been located from field survey information and existing drawings. The surveyor makes no guarantees that the underground utilities comprise all such utilities in the area, either in-service or abandoned. The surveyor further does not warrant that the underground utilities shown are in the exact location indicated although the surveyor does certify that they are located as accurately as possible from information available. The surveyor has not physically located the underground utilities.

CURVE DATA TABLE

CURVE	DELTA ANGLE	RADIUS	ARC LENGTH	CHORD DIRECTION	CHORD LENGTH
C1	43°34'19"	850.00'	646.40'	N21°31'10"W	630.94'
C2	05°08'03"	450.00'	40.32'	N46°12'19"E	40.31'
C3	09°56'10"	2136.39'	370.49'	N48°36'22"E	370.02'
C4	23°58'29"	772.90'	323.41'	N65°33'42"E	321.05'

Indiana811
Know what's below. Call before you dig.
"IT'S THE LAW"
CALL 2 WORKING DAYS BEFORE YOU DIG
1-800-382-5544 or 811
CALL TOLL FREE
PER INDIANA STATE LAW IS-69-1991. IT IS AGAINST THE LAW TO EXCAVATE WITHOUT NOTIFYING THE UNDERGROUND LOCATION SERVICE TWO (2) WORKING DAYS BEFORE COMMENCING WORK.

CROSSROAD ENGINEERING, P.C.
Development Consultants
317.780.1555
317.780.1560
SHEET 200

TOPOGRAPHICAL SURVEY

HILLVIEW PROPERTY

JOB No.	.	CHECKED	TEN
DRAWN	LMC	APPR.	GJI
DESIGNED	GJI		
DATE	SEPT 2013		

NO.	DATE	REVISIONS	BY	APPR.
9				
8				
7				
6				
5				
4				
3				
2				
1				

SHEET 200

DIRECTORY PATH : R:\Active\John Gammer\Hillview CC Property\CAD\PLANS
FILENAME : 200 TOPOGRAPICAL SURVEY.dwg
DATE/USER : 9/5/2013 4:06 PM / Lisa Cox

- **EXHIBIT B-** ALTA / ACSM Survey

Franklin Community School Corp
Part of SE ¼ of S12-T12N-R4E
& Part of NE ¼ of S13-T12N-R4E
Johnson County, Indiana

A.L.T.A. / A.C.S.M. Survey

Pt of SE ¼ of S12-T12N-R4E & Pt of NE ¼ of S13-T12N-R4E

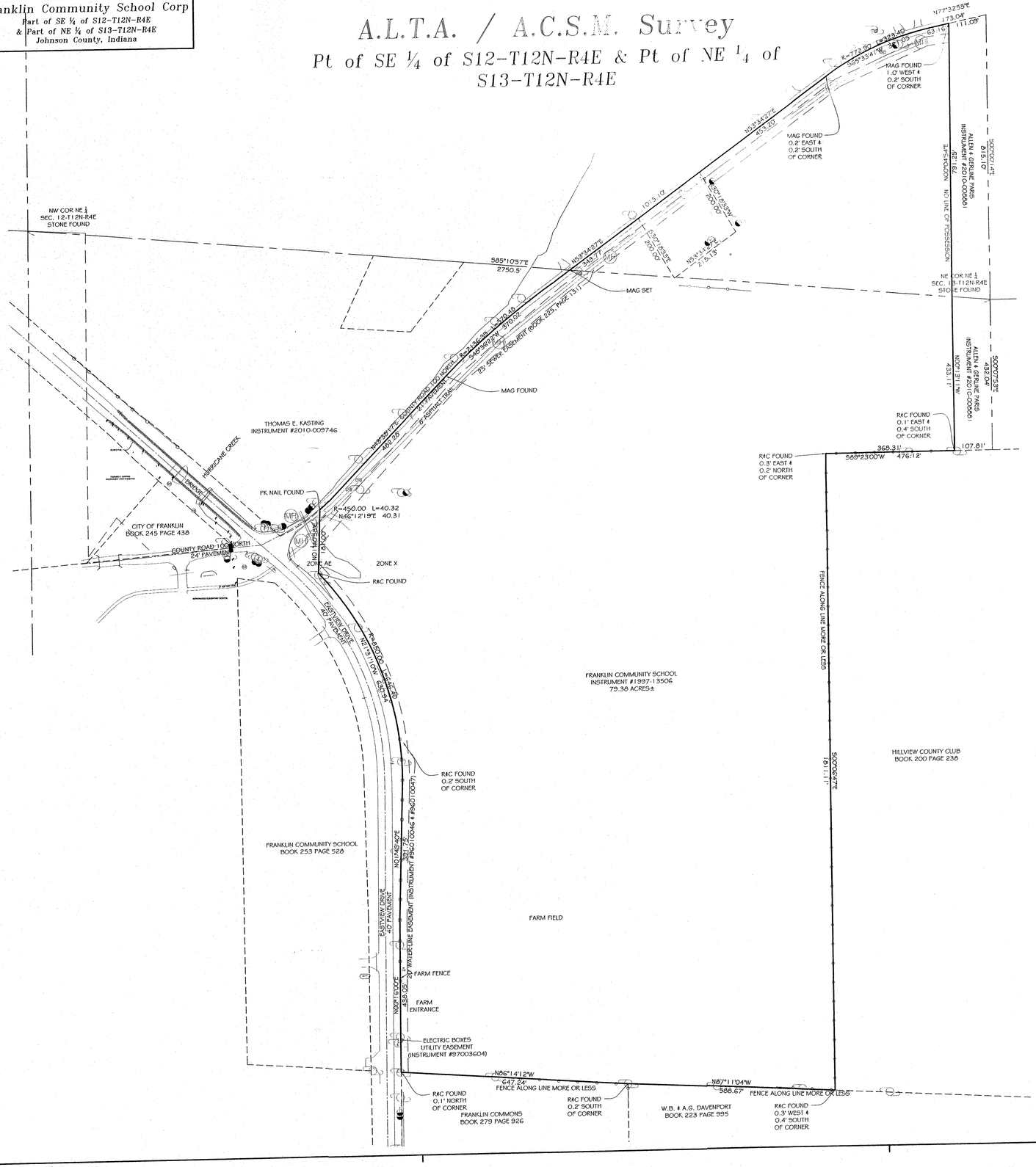

LAND DESCRIPTION: INSTRUMENT NUMBER 97013506

A PART OF THE SOUTHEAST QUARTER OF SECTION 12, AND A PART OF THE NORTHEAST QUARTER OF SECTION 13, ALL IN TOWNSHIP 12 NORTH, RANGE 4 EAST OF THE SECOND PRINCIPAL MERIDIAN, IN JOHNSON COUNTY, INDIANA, MORE PARTICULARLY DESCRIBED AS FOLLOWS:

BEGINNING AT A STONE FOUND AT THE NORTHEAST CORNER OF THE NORTHEAST QUARTER OF THE SAID SECTION 13; THENCE SOUTH 00 DEGREES 07 MINUTES 53 SECONDS EAST ON AND ALONG THE EAST LINE THEREOF 432.04 FEET; THENCE SOUTH 89 DEGREES 23 MINUTES 00 SECONDS WEST 476.12 FEET TO AN IRON ROD FOUND; THENCE SOUTH 00 DEGREES 06 MINUTES 47 SECONDS EAST 1811.11 FEET TO AN IRON ROD FOUND; THENCE NORTH 87 DEGREES 11 MINUTES 04 SECONDS WEST 588.67 FEET TO AN IRON ROD FOUND; THENCE NORTH 86 DEGREES 14 MINUTES 12 SECONDS WEST 647.24 FEET TO AN IRON ROD FOUND AT THE EAST RIGHT-OF-WAY LINE OF EASTVIEW DRIVE; THENCE NORTH 00 DEGREES 16 MINUTES 00 SECONDS EAST ON AND ALONG THE SAID RIGHT-OF-WAY LINE 391.75 FEET TO A RIGHT-OF-WAY FENCE POST; THENCE NORTH 01 DEGREES 43 MINUTES 40 SECONDS EAST ON AND ALONG THE SAID RIGHT-OF-WAY LINE ON A CURVE TO THE LEFT WHICH HAS A RADIUS OF 850.00 FEET FEET TO AN IRON ROD SET; THENCE NORTHWESTERLY ON AND ALONG THE SAID RIGHT-OF-WAY LINE ON A CURVE TO THE LEFT WHICH HAS A RADIUS OF 850.00 FEET A CURVED DISTANCE OF 646.40 FEET, SAID ARC BEING SUBTENDED BY A CORD BEARING NORTH 21 DEGREES 31 MINUTES 10 SECONDS WEST 630.94 FEET TO AN IRON ROD SET; THENCE NORTH 01 DEGREE 40 MINUTES 58 SECONDS EAST ON AND ALONG THE SAID RIGHT-OF-WAY LINE 181.00 FEET TO A "P-K" NAIL SET IN THE CENTERLINE OF UPPER SHELBYVILLE ROAD; THENCE NORTHEASTERLY ON AND ALONG THE SAID CENTERLINE ON A CURVE TO THE LEFT WHICH HAS A RADIUS OF 450.00 FEET A CURVED DISTANCE OF 40.32 FEET, SAID ARC BEING SUBTENDED BY A CHORD BEARING NORTH 46 DEGREES 12 MINUTES 19 SECONDS EAST 40.31 FEET; THENCE NORTH 43 DEGREES 38 MINUTES 17 SECONDS EAST ON AND ALONG THE SAID CENTERLINE 482.28 FEET TO THE BEGINNING OF A TANGENT CURVE; THENCE NORTHEASTERLY ON AND ALONG THE SAID CENTERLINE ON A CURVE TO THE RIGHT WHICH HAS A RADIUS OF 2136.39 FEET A CURVED DISTANCE OF 370.49 FEET, SAID ARC BEING SUBTENDED BY A CHORD BEARING NORTH 48 DEGREES 36 MINUTES 22 SECONDS EAST 370.02 FEET; THENCE NORTH 53 DEGREES 34 MINUTES 27 SECONDS EAST ON AND ALONG THE SAID CENTERLINE 343.77 FEET TO A "P-K" NAIL SET; THENCE SOUTH 30 DEGREES 18 MINUTES 33 SECONDS EAST 200.00 FEET; THENCE NORTH 53 DEGREES 34 MINUTES 27 SECONDS EAST 218.13 FEET; THENCE NORTH 30 DEGREES 18 MINUTES 33 SECONDS WEST 200.00 FEET TO A "P-K" NAIL SET IN THE CENTERLINE OF UPPER SHELBYVILLE ROAD; THENCE NORTH 53 DEGREES 34 MINUTES 27 SECONDS EAST ON AND ALONG SAID CENTERLINE 453.20 FEET TO THE BEGINNING POINT OF A TANGENT CURVE; THENCE NORTHEASTERLY ON AND ALONG THE SAID CENTERLINE ON A CURVE TO THE RIGHT WHICH HAS A RADIUS OF 772.90 FEET A CURVED DISTANCE OF 323.41 FEET, SAID ARC BEING SUBTENDED BY A CHORD BEARING NORTH 65 DEGREES 33 MINUTES 41 SECONDS EAST 321.05 FEET; THENCE NORTH 77 DEGREES 32 MINUTES 55 SECONDS EAST ON AND ALONG THE SAID CENTERLINE 173.04 FEET TO A RAILROAD SPIKE FOUND ON THE EAST LINE OF THE SOUTHEAST QUARTER OF THE SAID SECTION 12; THENCE SOUTH 00 DEGREES 00 MINUTES 14 SECONDS EAST ON AND ALONG THE SAID EAST LINE 815.10 FEET TO THE POINT OF BEGINNING, CONTAINING 81.4626 ACRES, MORE OR LESS.

MODERNIZED LEGAL DESCRIPTION: JOHNSON COUNTY LAND TITLE COMMITMENT NO. 13-63311

A PART OF THE SOUTHEAST QUARTER OF SECTION 12, AND A PART OF THE NORTHEAST QUARTER OF SECTION 13, ALL IN TOWNSHIP 12 NORTH, RANGE 4 EAST OF THE SECOND PRINCIPAL MERIDIAN, IN JOHNSON COUNTY, INDIANA, MORE PARTICULARLY DESCRIBED AS FOLLOWS:

COMMENCING AT A STONE FOUND AT THE NORTHEAST CORNER OF THE NORTHEAST QUARTER OF THE SAID SECTION 13; THENCE SOUTH 00 DEGREES 07 MINUTES 53 SECONDS EAST ON AND ALONG THE EAST LINE THEREOF 432.04 FEET; THENCE SOUTH 89 DEGREES 23 MINUTES 00 SECONDS WEST 368.31; THENCE ROD FOUND AT THE POINT OF BEGGING OF THIS DESCRIBED TRACT; THENCE CONTINUING SOUTH 89 DEGREES 23 MINUTES 00 SECONDS WEST 368.31; THENCE SOUTH 00 DEGREES 06 MINUTES 47 SECONDS EAST 1811.11 FEET TO AN IRON ROD FOUND; THENCE NORTH 87 DEGREES 11 MINUTES 04 SECONDS WEST 588.67 FEET TO AN IRON ROD FOUND; THENCE NORTH 86 DEGREES 14 MINUTES 12 SECONDS WEST 647.24 FEET TO AN IRON ROD FOUND AT THE EAST RIGHT-OF-WAY LINE OF EASTVIEW DRIVE; THENCE NORTH 00 DEGREES 16 MINUTES 00 SECONDS EAST ON AND ALONG THE SAID RIGHT-OF-WAY LINE 438.05 FEET TO A RIGHT-OF-WAY FENCE POST; THENCE NORTH 01 DEGREES 43 MINUTES 40 SECONDS EAST ON AND ALONG THE SAID RIGHT-OF-WAY LINE ON A CURVE TO THE LEFT WHICH HAS A RADIUS OF 850.00 FEET AN IRON ROD SET; THENCE NORTHWESTERLY ON AND ALONG THE SAID RIGHT-OF-WAY LINE ON A CURVE TO THE LEFT WHICH HAS A RADIUS OF 850.00 FEET A CURVED DISTANCE OF 646.40 FEET, SAID ARC BEING SUBTENDED BY A CORD BEARING NORTH 21 DEGREES 31 MINUTES 10 SECONDS WEST 630.94 FEET TO AN IRON ROD SET; THENCE NORTH 01 DEGREE 40 MINUTES 58 SECONDS EAST ON AND ALONG THE SAID RIGHT-OF-WAY LINE 181.00 FEET TO A "P-K" NAIL SET IN THE CENTERLINE OF UPPER SHELBYVILLE ROAD; THENCE NORTHEASTERLY ON AND ALONG THE SAID CENTERLINE ON A CURVE TO THE LEFT WHICH HAS A RADIUS OF 450.00 FEET A CURVED DISTANCE OF 40.32 FEET, SAID ARC BEING SUBTENDED BY A CHORD BEARING NORTH 46 DEGREES 12 MINUTES 19 SECONDS EAST 40.31 FEET; THENCE NORTH 43 DEGREES 38 MINUTES 17 SECONDS EAST ON AND ALONG THE SAID CENTERLINE 482.28 FEET TO THE BEGINNING OF A TANGENT CURVE; THENCE NORTHEASTERLY ON AND ALONG THE SAID CENTERLINE ON A CURVE TO THE RIGHT WHICH HAS A RADIUS OF 2136.39 FEET A CURVED DISTANCE OF 370.49 FEET, SAID ARC BEING SUBTENDED BY A CHORD BEARING NORTH 48 DEGREES 36 MINUTES 22 SECONDS EAST 370.02 FEET; THENCE NORTH 53 DEGREES 34 MINUTES 27 SECONDS EAST ON AND ALONG THE SAID CENTERLINE 343.77 FEET TO A "P-K" NAIL SET; THENCE SOUTH 30 DEGREES 18 MINUTES 33 SECONDS WEST EAST 200.00 FEET; THENCE NORTH 53 DEGREES 34 MINUTES 27 SECONDS EAST 218.13 FEET; THENCE NORTH 30 DEGREES 18 MINUTES 33 SECONDS WEST 200.00 FEET TO A "P-K" NAIL SET IN THE CENTERLINE OF UPPER SHELBYVILLE ROAD; THENCE NORTH 53 DEGREES 34 MINUTES 27 SECONDS EAST ON AND ALONG SAID CENTERLINE 453.20 FEET TO THE BEGINNING POINT OF A TANGENT CURVE; THENCE NORTHEASTERLY ON AND ALONG THE SAID CENTERLINE ON A CURVE TO THE RIGHT WHICH HAS A RADIUS OF 772.90 FEET A CURVED DISTANCE OF 323.41 FEET, SAID ARC BEING SUBTENDED BY A CHORD BEARING NORTH 65 DEGREES 33 MINUTES 41 SECONDS EAST 321.05 FEET; THENCE NORTH 77 DEGREES 32 MINUTES 55 SECONDS EAST ON AND ALONG THE SAID CENTERLINE 63.16 FEET; THENCE SOUTH 00 DEGREES 04 MINUTES 54 SECONDS WEST 791.25; THENCE SOUTH 00 DEGREES 13 MINUTES 11 SECONDS EAST 433.11 FEET TO THE POINT OF BEGINNING, CONTAINING 79.38 ACRES, MORE OR LESS.

FLOOD HAZARD STATEMENT:

THE PROPERTY PLOTS BY SCALE AS BEING IN ZONE "AE" & "X" OF THE FLOOD INSURANCE RATE MAP (FIRM) FOR JOHNSON COUNTY, INDIANA, COMMUNITY PANEL NO. 18081 C 0232D & 18081 C 0231D, DATED AUGUST 2, 2007. THE ACCURACY OF ALL FLOOD HAZARD DATA SHOWN ON THIS PROJECT IS SUBJECT TO MAP SCALE UNCERTAINTY AND TO ANY OTHER UNCERTAINTY IN LOCATION OF ELEVATION ON THE RECORDED FLOOD INSURANCE RATE MAP.

ZONING:

THE PROPERTY IS ZONED "RS-1" RESIDENTIAL SUBURBAN ONE, FIVE MINIMUM STANDARDS ARE AS FOLLOWS:
FRONT YARD SETBACK - ARTERIAL - 50 FEET FROM RIGHT-OF-WAY
COLLECTOR STREET - GREATER OF - 30 FEET FROM RIGHT-OF-WAY
LOCAL STREET - 20 FEET FROM RIGHT-OF-WAY
SIDE YARD SETBACK - 10 FEET
REAR YARD SETBACK - 25 FEET
BUILDING HEIGHT - PRIMARY BUILDING 48 FEET, ACCESSORY BUILDINGS 20 FEET

FOR ADDITIONAL INFORMATION CONTACT WWW.FRANKLIN.IN.GOV

SURVEYORS COMMENTS:

THE PURPOSE OF THIS SURVEY IS TO PERFORM AN A.L.T.A. MINIMUM STANDARDS SURVEY OF THE ABOVE DESCRIBED REAL ESTATE. A PREVIOUS ALTA SURVEY PERFORMED BY MID-STATES ENGINEERING IN 2001 WAS UTILIZED AS A BASIS FOR THIS ALTA PERFORMED UNDER NEW 2011 STANDARDS. CALLED FOR MONUMENTS WERE RECOVERED AND THE BOUNDARY WAS SET AND/OR VERIFIED IN ACCORDANCE WITH THE GEOMETRY SHOWN ON THE DESCRIPTION OF RECORD.

SCHEDULE B ITEMS:

14. GRANT OF SEWER EASEMENT RECORDED MARCH 26, 1981 IN DEED RECORD 225, PAGE 131 GRANTED TO THE CITY OF FRANKLIN. - DIFFICULT TO READ DOCUMENT.

15. GAS LINE EASEMENT RECORDED NOVEMBER 30, 1984 IN DEED RECORD 234, PAGE 436 GRANTED TO INDIANA GAS COMPANY, INC. - DOES NOT APPLY.

16. WATERLINE EASEMENT RECORDED OCTOBER 28, 1988 IN DEED RECORD 250, PAGE 551 GRANTED TO INDIANA CITIES WATER CORPORATION. - NOES NO APPLY.

17. RIGHT OF WAY AND EASEMENT RECORDED MAY 10, 1996 AS INSTRUMENT NUMBER 9610046 AND 9601 0047 GRANTED TO INDIANA AMERICAN WATER COMPANY. - AS SHOWN.

18. UTILITY EASEMENT RECORDED FEBRUARY 25, 1997 AS INSTRUMENT NUMBER 97003604 GRANTED TO HOOSIER ENERGY RURAL ELECTRIC COOPERATIVE, INC. - AS SHOWN.

SURVEYOR'S REPORT: IN ACCORDANCE WITH TITLE 865, ARTICLE 1, RULE 12, SECTION 1 THROUGH 19 OF THE INDIANA ADMINISTRATIVE CODE, THE FOLLOWING OBSERVATIONS AND OPINIONS ARE SUBMITTED REGARDING THE VARIOUS UNCERTAINTIES IN THE LOCATIONS OF THE LINES AND CORNERS ESTABLISHED ON THIS SURVEY AS A RESULT OF:

VARIANCE IN THE REFERENCED MONUMENTS;
DISCREPANCIES IN RECORDED DESCRIPTIONS AND PLATS;
INCONSISTENCIES IN LINES OF OCCUPATION;
THE ACCEPTABLE RELATIVE POSITIONAL ACCURACIES FOR EACH CLASSIFICATION OF SURVEY ARE AS FOLLOWS:
(1) URBAN SURVEYS: 0.07 FEET (21 MILLIMETERS) PLUS 50 PARTS PER MILLION.
(2) SUBURBAN SURVEYS: 0.13 FEET (40 MILLIMETERS) PLUS 100 PARTS PER MILLION.
(3) RURAL SURVEYS: 0.26 FEET (79 MILLIMETERS) PLUS 200 PARTS PER MILLION.
AS DEFINED IN IAC 865. THIS SURVEY IS A RETI. .EMENT SURVEY AS DEFINED IN IAC 865, OF A TRACT OF LAND.

FINDING OF FACTS:

WITHOUT ADDITIONAL PROOF, THE FACT THAT SURVEYS ACCEPT A MONUMENT DOES NOT MAKE IT CORRECT. THE MONUMENT MUST HAVE BEEN INITIALLY CORRECT. COMMON REPORT AND REPUTATION EVIDENCE DOES NOT OVERCOME CONTRARY PROOF. THEREFORE, THE LOCATION OF ANY OF THE ABOVE-DISCUSSED MONUMENTS MAY YET BE CONTRADICTED AND OVERCOME BY UNDISCOVERED EVIDENCE. AS A RESULT, ANY PROPERTY BOUNDARY, WHOSE LOCATION IS DEPENDENT ON THESE CORNER MONUMENTS, IS SUBJECT TO UNDISCOVERED EVIDENCE, WHICH MIGHT RESULT IN A DIFFERENT LOCATION FOR THE CORNERS. BECAUSE A DIMENSIONAL VALUE TO THE UNCERTAINTY OF THESE CORNERS IS SUBJECTIVE, AND FOR THESE REASONS CITED ABOVE, THE UNCERTAINTY OF THESE CORNERS IS UNKNOWN.

IF FENCES ARE TO BE INSTALLED, IT SHOULD BE KEPT IN MIND THE UNCERTAINTIES OF CORNERS FOUND AND SET. AS A RESULT OF THE ABOVE OBSERVATIONS, IT IS TO THE BEST OF MY KNOWLEDGE AND BELIEF THAT THE UNCERTAINTIES IN THE LOCATIONS OF THE LINES AND CORNERS ESTABLISHED ON THIS SURVEY AREA AS FOLLOWS:

DUE TO VARIANCES IN REFERENCE MONUMENTS: 0.5 FEET ±
DUE TO DISCREPANCIES IN THE RECORD DESCRIPTIONS: NONE
DUE TO INCONSISTENCIES IN LINES OF OCCUPATION: 3.9 FEET ±

REFERENCE INFORMATION:

JOHNSON COUNTY LAND TITLE COMMITMENT NO. 13-63311, DATED MAY 29, 2013
MID-STATES ENGINEERING ALTA, DATED MAY 22, 2001
SUBJECT AND ADJOINER DEEDS
TAX MAPS, & EASEMENT RECORDS

CERTIFICATION: TO CHICAGO TITLE INSURANCE COMPANY; JOHNSON COUNTY LAND TITLE; YOUNG AND YOUNG; FRANKLIN COMMUNITY SCHOOL CORPORATION;

THIS IS TO CERTIFY THAT THIS MAP OR PLAT AND THE SURVEY ON WHICH IT IS BASED WERE MADE IN ACCORDANCE WITH "MINIMUM STANDARD DETAIL REQUIREMENTS FOR ALTA/ACSM AND NSPS IN 2011, AND INCLUDES ITEMS 1, 2, 3, 4, 7A, 8, 11A, & 13 OF TABLE "A" THEREOF. PURSUANT TO THE ACCURACY STANDARDS AS ADOPTED BY ALTA, NSPS, AND ACSM AND IN EFFECT ON THE DATE OF THIS CERTIFICATION, UNDERSIGNED FURTHER CERTIFIES THAT THE SURVEY MEASUREMENTS WERE MADE IN ACCORDANCE WITH THE "MINIMUM ANGLE, DISTANCE, AND CLOSURE REQUIREMENTS FOR SURVEY MEASUREMENTS WHICH CONTROL LAND BOUNDARIES FOR ALTA/ACSM LAND TITLE SURVEYS".

"I AFFIRM UNDER THE PENALTIES FOR PERJURY, THAT I HAVE TAKEN REASONABLE CARE TO REDACT EACH SOCIAL SECURITY NUMBER IN THIS DOCUMENT, UNLESS REQUIRED BY LAW." - JEFFREY J. KONDY

DATE OF LAST FIELD WORK: JUNE 5, 2013.

DATE CERTIFIED: JUNE 7, 2013.

SURVEYORS SIGNATURE _____ JEFFREY J. KONDY PROFESSIONAL LAND SURVEYOR NO. 201 0068

Site Map

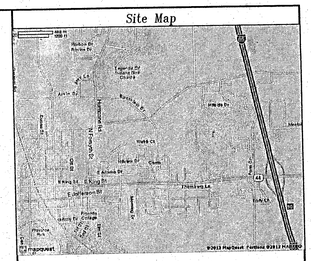

Graphic Scale
150 0 75 150 300
1 Inch = 150 Feet

Revisions

JEFFREY J. KONDY REGISTERED No. LS20100068 STATE OF INDIANA LAND SURVEYOR

JEFFREY J. KONDY PROFESSIONAL LAND SURVEYOR NO. 201 0068

THIS DRAWING/COMPUTER FILE, IDEAS, DESIGN AND CONCEPTS CONTAINED HEREIN ARE THE EXCLUSIVE INTELLECTUAL PROPERTY OF CKW LAND SURVEYING, INC. © ANY REPRODUCTION OR REUSE OF THIS DOCUMENT IN WHOLE OR IN PART, WITHOUT WRITTEN PERMISSION FROM CKW LAND SURVEYING, INC. IS PROHIBITED. &

CKW Land Surveying, Inc.
301 East Jefferson St.
Franklin, Indiana 46131
(317) 736-0781 - Office
(317) 736-0791 - Fax

Prepared For:

Franklin Community School Corp
998 Grizzly Cub Drive
Franklin, Indiana 46131

Project:

Upper Shelbyville Rd
Franklin, Indiana,
Needham Township,
Johnson County

Sheet Title
A.L.T.A. / A.C.S.M. Survey

Scale	Drawn	Designed	Checked
1" = 150'	CAP	N/A	JJK

Work Order No. 130100

Date: June 7, 2013

Sheet Number 1 of 1

June 07, 2013 - 9:39am

Q:\Users\Public\Documents\CKW 2013\130100\dwg\130100.dwg

- **EXHIBIT C-** Detailed PUD Plan – Homesteads at Hillview

DETAILED PUD PLAN
HOMESTEADS AT HILLVIEW

A PART OF THE SOUTHEAST QUARTER OF SECTION 12, AND A PART OF THE NORTHEAST QUARTER OF SECTION 13, ALL IN TOWNSHIP 12 NORTH, RANGE 4 EAST OF THE SECOND PRINCIPAL MERIDIAN, IN JOHNSON COUNTY, INDIANA

120 0 120 240

SCALE: 1"=120'

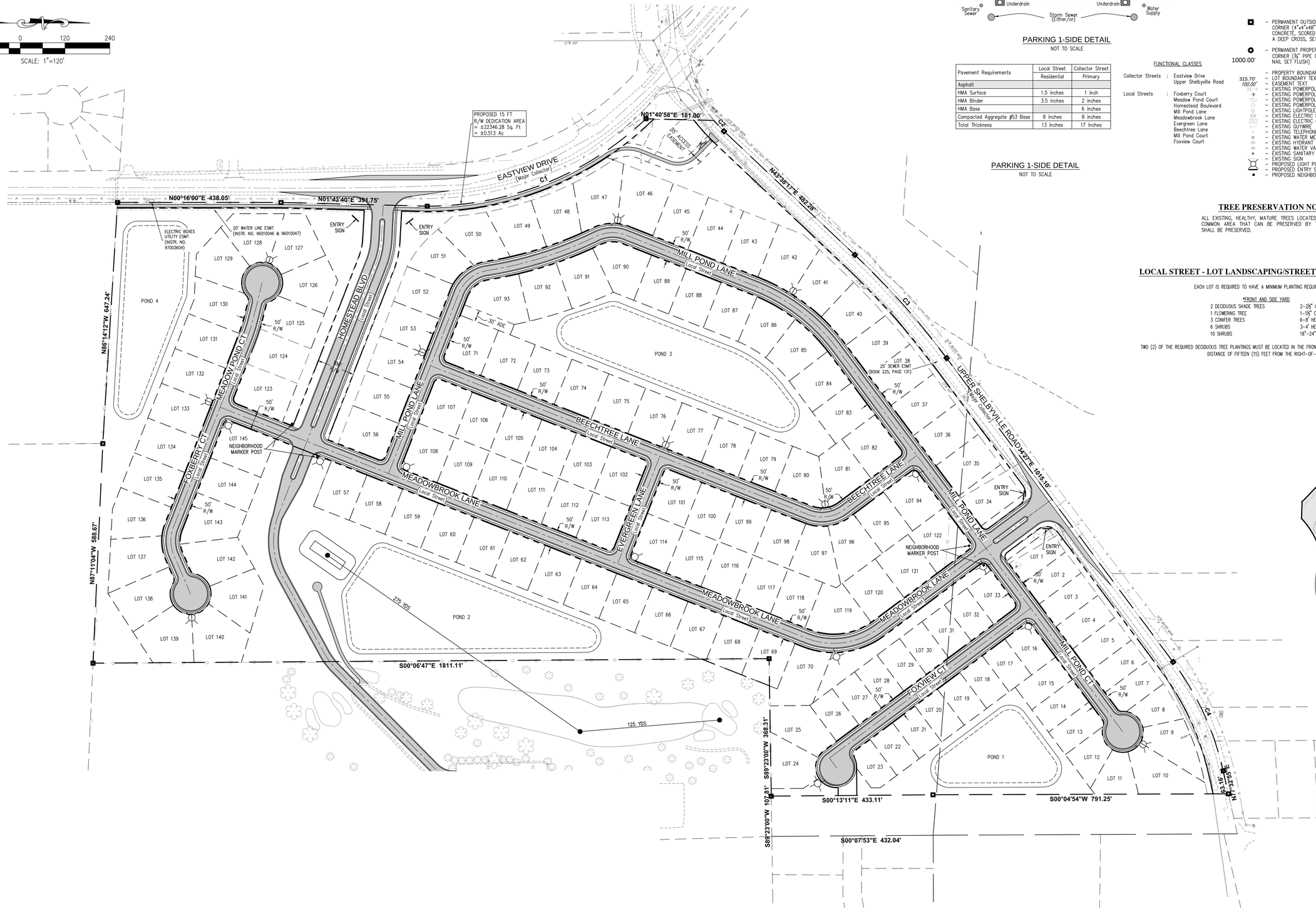

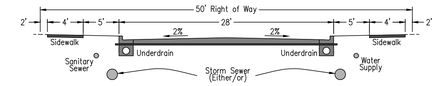

PARKING 1-SIDE DETAIL

NOT TO SCALE

Pavement Requirements	Local Street Residential	Collector Street Primary
Asphalt		
HMA Surface	1.5 inches	1 inch
HMA Binder	3.5 inches	2 inches
HMA Base		6 inches
Compacted Aggregate #53 Base	8 inches	8 inches
Total Thickness	13 inches	17 inches

FUNCTIONAL CLASSES

Collector Streets : Eastview Drive, Upper Shelbyville Road

Local Streets : Foxberry Court, Meadow Pond Court, Homestead Boulevard, Mill Pond Lane, Meadowbrook Lane, Evergreen Lane, Beechtree Lane, Mill Pond Court, Foxview Court

PARKING 1-SIDE DETAIL

NOT TO SCALE

LEGEND

- PERMANENT OUTSIDE BOUNDARY CORNER (4"x4"x48" PRECAST CONCRETE, SCORED ON TOP WITH A DEEP CROSS, SET FLUSH)
- 1000.00' PERMANENT PROPERTY LOT CORNER (¾" PIPE OR 2" MAG NAIL SET FLUSH)
- PROPERTY BOUNDARY TEXT
- 315.70' /100.00' LOT BOUNDARY TEXT
- EASEMENT TEXT
- EXISTING POWERPOLE WITH LIGHT
- EXISTING POWERPOLE GROUND
- EXISTING POWERPOLE UTILITY
- EXISTING POWERPOLE
- EXISTING LIGHTPOLE
- EXISTING ELECTRIC MANHOLE
- EXISTING ELECTRIC CABINET
- EXISTING GUYWIRE
- EXISTING TELEPHONE RISER
- EXISTING WATER METER
- EXISTING HYDRANT
- EXISTING WATER VALVE
- EXISTING SANITARY MANHOLE
- EXISTING SIGN
- PROPOSED LIGHT POLE
- PROPOSED ENTRY SIGNS
- PROPOSED NEIGHBORHOOD MARKER POST
- RIGHT-OF-WAY
- SETBACKS
- SECTION LINE
- EASEMENT
- PROPOSED LOT LINE
- EXISTING ADJOINERS
- EXISTING PAVEMENT
- FLOODPLAIN
- PROPOSED EASEMENT
- PROPOSED RIGHT-OF-WAY
- PROPERTY LINE
- EXISTING DITCH
- PROPOSED DITCH
- EXISTING TREE LINE
- EXISTING FARM FIELD FENCE
- EXISTING GUARDRAIL
- EXISTING ELECTRIC LINE
- EXISTING WATER LINE
- EXISTING STORM SEWER
- EXISTING SANITARY SEWER
- EXISTING ASPHALT
- EXISTING CONCRETE

TREE PRESERVATION NOTE

ALL EXISTING, HEALTHY, MATURE TREES LOCATED WITHIN ANY COMMON AREA THAT CAN BE PRESERVED BY THE PROJECT SHALL BE PRESERVED.

LOCAL STREET - LOT LANDSCAPING/STREET TREE REQUIREMENT

EACH LOT IS REQUIRED TO HAVE A MINIMUM PLANTING REQUIREMENT OF:

*FRONT AND SIDE YARD	
2 DECIDUOUS SHADE TREES	2-2½" CALIPER
1 FLOWERING TREE	1-1½" CALIPER
3 CONIFER TREES	6-8' HEIGHT
6 SHRUBS	3-4' HEIGHT
10 SHRUBS	18"-24" HEIGHT

TWO (2) OF THE REQUIRED DECIDUOUS TREE PLANTINGS MUST BE LOCATED IN THE FRONT YARD OF EACH LOT, AT A MAXIMUM DISTANCE OF FIFTEEN (15) FEET FROM THE RIGHT-OF-WAY.

- **EXHIBIT D-** Open Space Exhibit

OPEN SPACE EXHIBIT
HOMESTEADS AT HILLVIEW

TOTAL ACREAGE	=	79.551 Acres
COMMON AREA ACREAGE	=	22.591 Acres

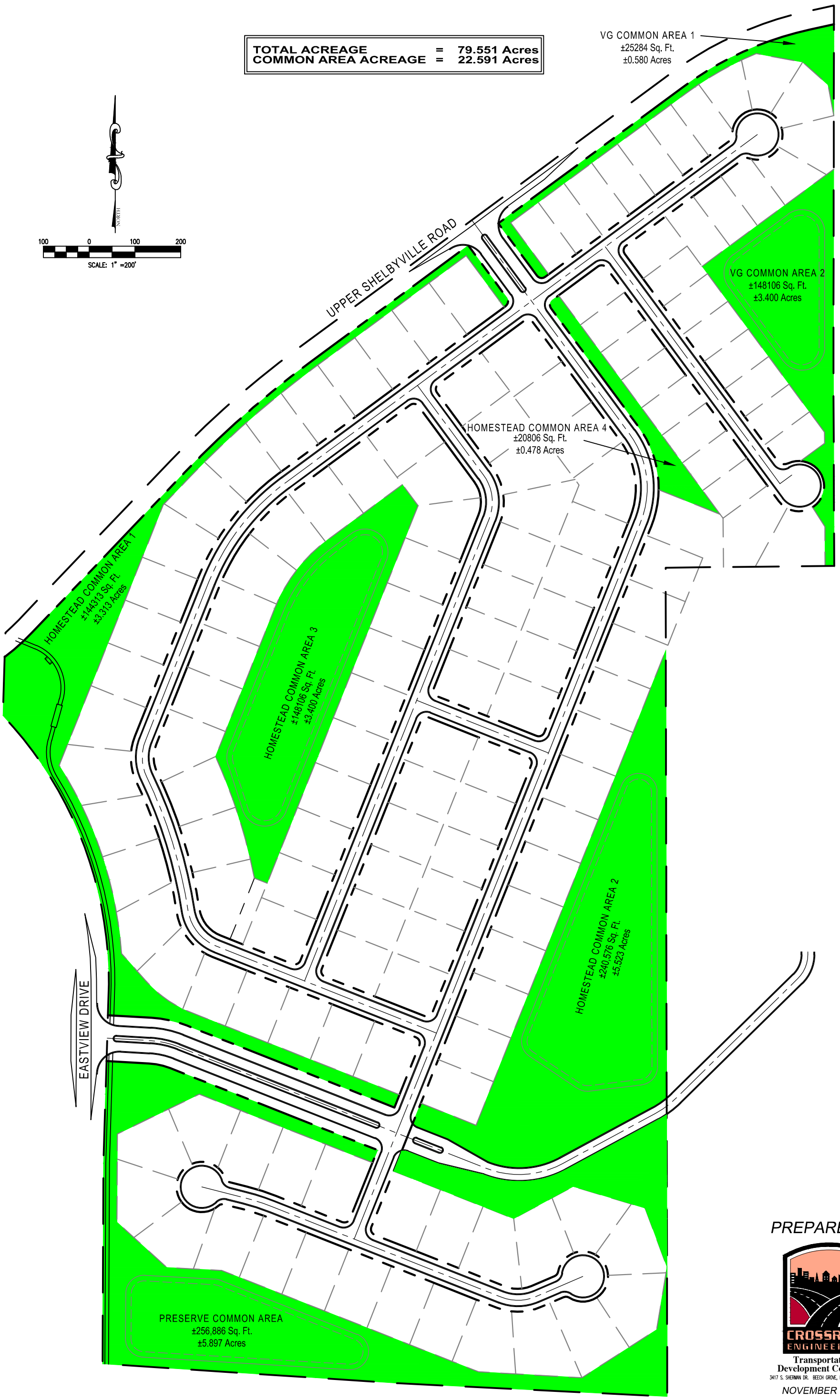

PREPARED BY:

CROSSROAD ENGINEERS, PC

Transportation & Development Consultants

3417 S. SHERMAN DR. BEECH GROVE, IN 46107 (317) 780-1555

NOVEMBER 13, 2013

- **EXHIBIT E-** Conceptual PUD Landscape Plan

LANDSCAPE NOTES:

1. THE GENERAL CONTRACTOR IS RESPONSIBLE FOR REMOVING ALL VEGETATION AND LEAVING ALL LANDSCAPE AREAS AT TWO INCHES BELOW FINAL GRADE, EXCEPT FOR THE DETENTION POND AREA; GENERAL CONTRACTOR IS RESPONSIBLE FOR BRINGING THE POND AREA TO FINAL GRADE. THE LANDSCAPE CONTRACTOR WILL PROVIDE AND SPREAD A COMPACTED TWO INCH DEPTH OF LOAMY TOPSOIL IN ALL TURF AREAS – BRINGING THESE AREAS TO TOP OF CURB/FINAL GRADE (COMPACTED). THE LANDSCAPE CONTRACTOR WILL PROVIDE AND INSTALL A FOUR INCH DEPTH OF PLANTING MIX TO ALL PLANTING BEDS – CROWNING FOR PROPER DRAINAGE. (SEE SPECIFICATIONS FOR MORE DETAILED INSTRUCTION ON TURF AREA AND PLANTING BED PREPARATION.)
2. A THREE INCH DEPTH OF SHREDDED HARDWOOD BARK MULCH WILL BE USED AS A TOPDRESSING FOR ALL PLANTING BEDS AND TREE RINGS.
3. LANDSCAPE CONTRACTOR SHALL MAKE OWN PLANT QUANTITY TAKEOFFS USING DRAWINGS, SPECIFICATIONS AND PLANT SCHEDULE. PLANT SCHEDULE REQUIREMENTS (I.E. SPACING) DICTATE, UNLESS OTHERWISE DIRECTED BY THE LANDSCAPE DESIGNER. LANDSCAPE CONTRACTOR TO VERIFY BED MEASUREMENTS AND INSTALL APPROPRIATE QUANTITIES AS GOVERNED BY THE THE PLANT SPACING PER THE SCHEDULE. ENSURE ALL MINIMUM REQUIREMENTS OF THE LOCAL GOVERNING AUTHORITY ARE MET (I.E. MINIMUM PLANT QUANTITIES.)
4. NO SUBSTITUTIONS OF PLANT MATERIALS WILL BE ALLOWED. IF PLANTS ARE NOT AVAILABLE, THE LANDSCAPE CONTRACTOR SHALL NOTIFY THE LANDSCAPE DESIGNER IN WRITING (VIA PROPER CHANNELS). PLANTS MAY BE INSPECTED AND APPROVED OR REJECTED ON THE JOBSITE BY THE OWNER OR THE OWNER'S REPRESENTATIVE.
5. LANDSCAPE CONTRACTOR IS RESPONSIBLE FOR THE LANDSCAPE MAINTENANCE OF THIS PROJECT UNTIL FINAL ACCEPTANCE. TURF AREAS WILL NOT BE ACCEPTED UNTIL THEY AREA AT A MINIMUM OF 1–1/2 INCHES TALL, AND NO BARE AREAS LARGER THAN 12 SQUARE INCHES.

LANDSCAPE LEGEND

SMALL TREES

28 SNOWDRIFT CRABAPPLE
MALUS 'SNOWDRIFT'
2–1/2" CALIPER

31 EASTERN REDBUD
CERCIS CANADENSIS
2–1/2" CALIPER

EVERGREEN TREES

114 LACEBARK PINE
PINUS BUNGEANA
5' HEIGHT

202 BLACK HILLS SPRUCE
PICEA GLAUCA VAR. DENSATA
5' HEIGHT

LARGE TREES

25 'RED SUNSET' RED MAPLE
ACER RUBRUM 'RED SUNSET'
2–1/2" CALIPER

32 'ACCOLADE' ELM
ULMUS JAPONICA X WILSONIANA 'MORTON'
2–1/2" CALIPER

52 LAUREL OAK
QUERCUS HEMISPHAERICA
2–1/2" CALIPER

GRAPHIC SCALE
0 50 100 200 300 400
SCALE IN FEET

NOVEMBER 13, 2013
DECEMBER 5, 2013

CROSSROAD ENGINEERS, PC
Transportation & Development Consultants

SHEET 701

CONCEPTUAL PUD LANDSCAPE PLAN

HOMESTEADS AT HILLVIEW

JOB No.	.	DRAWN	LMC	CHECKED	TEN
DATE	NOVEMBER 14, 2013	DESIGNED	GJI	APPR.	GJI

EVERGREEN DESIGN GROUP
Landscape Designers & Consultants
1 (800) 680 6630
519 IH-30, Ste 123
Rockwall, TX 75087
www.evergreendesigngroup.net

NO.	DATE	REVISIONS	BY	APPR.
1	12/5/13	PER TAC COMMENTS – ADDED EVERGREEN TREES AND BERM	ADH	RDM
2				
3				
4				
5				
6				
7				
8				
9				

SHEET 701

DATE/USER : 12/5/2013 10:21 AM / ANt

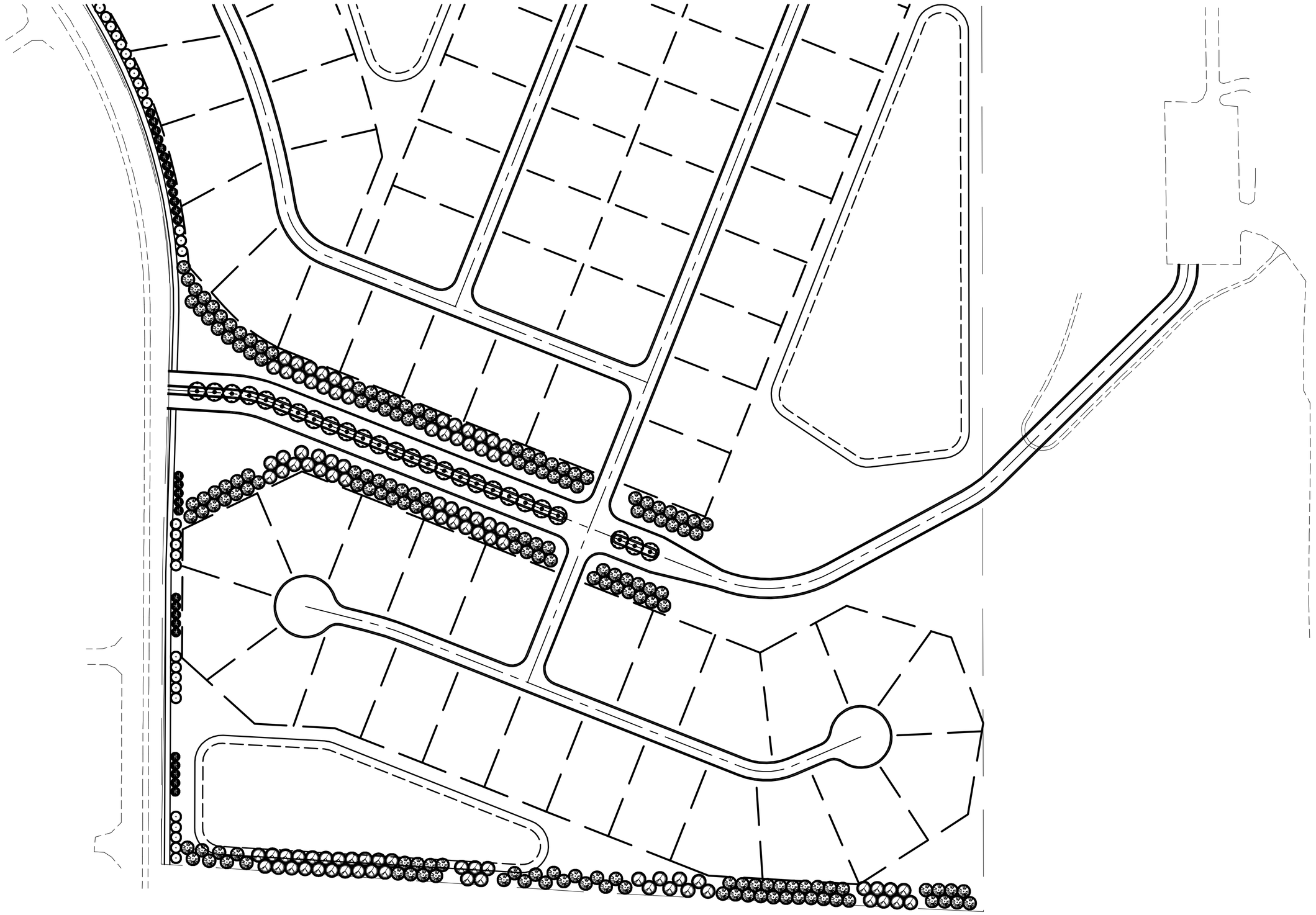

LANDSCAPE LEGEND

SMALL TREES

28 SNOWDRIFT CRABAPPLE
MALUS 'SNOWDRIFT'
2-1/2" CALIPER

31 EASTERN REDBUD
CERCIS CANADENSIS
2-1/2" CALIPER

EVERGREEN TREES

114 LACEBARK PINE
PINUS BUNGEANA
5' HEIGHT

202 BLACK HILLS SPRUCE
PICEA GLAUCA VAR. DENSATA
5' HEIGHT

LARGE TREES

25 'RED SUNSET' RED MAPLE
ACER RUBRUM 'RED SUNSET'
2-1/2" CALIPER

32 'ACCOLADE' ELM
ULMUS JAPONICA X WILSONIANA 'MORTON'
2-1/2" CALIPER

52 LAUREL OAK
QUERCUS HEMISPHAERICA
2-1/2" CALIPER

GRAPHIC SCALE

0 50 100 200 300 400

SCALE IN FEET

NOVEMBER 13, 2013
DECEMBER 5, 2013

CROSSROAD ENGINEERS, PE
Transportation & Development Consultants

SHEET 702

CONCEPTUAL PUD LANDSCAPE PLAN

HOMESTEADS AT HILLVIEW

JOB No.	.	DRAWN	LMC	CHECKED	TEN
DATE	NOVEMBER 14, 2013	DESIGNED	GJI	APPR.	GJI

EVERGREEN DESIGN GROUP
Landscape Designers & Consultants
1 (800) 680 6630
519 IH-30, Ste 123
Rockwall, TX 75087
www.evergreendesigngroup.net

NO.	DATE	REVISIONS	BY	APPR.
1	12/5/13	PER TAC COMMENTS - ADDED EVERGREEN TREES AND BERM	ADH	RDM
2				
3				
4				
5				
6				
7				
8				
9				

SHEET 702

DATE/USER : 12/5/2013 10:21 AM / AHK

LANDSCAPE PLANTING SPECIFICATIONS

QUALIFICATIONS OF LANDSCAPE CONTRACTOR

1. The landscaping shall be performed by a single firm specializing in landscape planting.
2. A list of successfully completed projects of this type, size and nature may be requested by the Owner for further qualification measures.
3. The Landscape Contractor must hold a valid Nursery and Floral Certificate issued by the Indiana Department of Agriculture, as well as operate under a Commercial Pesticide Applicator License - issued by either the Indiana Department of Agriculture or the Indiana Structural Pest Control Board.

SCOPE OF WORK

1. Work covered by these sections includes the furnishing of any paying for all materials, labor, services, equipment, licenses, taxes and any other items that are necessary for the execution, installation and completion of all work, specified herein and / or shown on the Landscape Plan.
2. All work shall be performed in accordance with all applicable laws, codes and regulations required by authorities having jurisdiction over such work and provide all inspections and permits required by federal, state and local authorities in supply, transportation and installation of materials.
3. The Landscape Contractor is responsible for the verification of all underground utility lines (telephone, gas, water, electrical, cable, television, etc...) prior to the start of any work.

PLANT MATERIALS

1. Provide plants typical of their species or variety, with normal, densely developed branches and vigorous, fibrous root systems.
2. Provide only sound, healthy, vigorous plants free from defects, disfiguring knots, sunscald injuries, frost cracks, abrasions of the bark, plant disease, insect eggs, borers and all other forms of infestation.
3. All plants shall be balled and burlapped or container grown as specified. No container grown stock will be accepted if it is root bound. All root wrapping material made of synthetics shall be removed at time of planting.
4. All material shall conform to the guidelines established by the American Association of Nurseryman.
5. Cracked or mushroomed rootballs are not acceptable.
6. Caliper measurement for standard (single trunk) trees shall be taken as follows: Six inches above the natural grade line for trees up to and including four inches in caliper; and twelve inches above the natural grade line for trees exceeding four inches in caliper - unless specified differently on the Landscape Plan.
7. Multi-trunk trees shall be measured by their overall planted height.

PRODUCTS

1. All manufactured products will be new.
2. Topsoil: A friable, loamy topsoil (or silty sand) with minimal clay clods.
3. Planting Mix: An equal part mixture of topsoil, sand and compost.
4. Starter Fertilizer: A 13-13-13 ratio with 25% scu, 5% sulfur, 2% iron and additional micronutrients.
5. Pre-Emergence: Any granular, non-staining pre-emergence that is labeled for the specific ornamentals or turf it will be utilized on. A pre-emergence herbicide is to be applied per the manufacturer's labeled rates.
6. Mulch: As specified on the planting plan - well decomposed.
7. Steel Edging: Professional steel edging, 14 gauge thick x 4 inches wide factory painted dark green. Acceptable manufacturers include Col-Met or approved equal.
8. Weed Barrier: A 5 ounce, woven, needle-punched fabric. Acceptable product includes DeWitt' Pro 5, or approved equal.
9. Tree Stakes: 6' green metal t-posts
10. Tree Chain: 1" wide plastic tree chain

TREE PLANTING

1. Tree holes shall be excavated to a width of two times the width of the rootball, and to a depth equal to the depth of the rootball (less two inches).
2. Scarify the sides and bottom of the tree hole prior to the placement of the tree. Remove any glazing that may have been caused during the excavation of the hole.
3. Install the tree so the top of the rootball is one to two inches above the surrounding grade.
4. Backfill the tree hole utilizing the existing topsoil from on-site. Clay, rocks and other debris shall be removed from the soil prior to the backfill. Should additional soil be required to accomplish this task, import additional topsoil from off-site, add no additional cost to the Owner.
5. The total number of tree stakes (beyond the minimum's listed below) will be left to the Landscape Contractor's discretion. Should any trees fall or lean, it will be the responsibility of the Landscape Contractor to straighten the tree, or replace it should it become damaged. Tree staking will consists of, at a minimum:

15 - 30 gal Trees	(2) Stakes per Tree
45 - 100 gal Trees	(3) Stakes per Tree
Multi-Trunk Trees	No Minimum

6. Upon completion of the planting, an earth watering basin will be constructed around the tree. The interior of the tree ring will then be covered with the weed barrier cloth, and topdressed with a three inch layer of mulch.

SHRUB AND GROUNDCOVER PLANTING

1. Upon approval of the grade left by the General Contractor, the Landscape Contractor will rototill the proposed bed locations (BEFORE adding the imported soil). A four inch depth of the specified planting mix will then be evenly spread over the designated bed area. The planting bed will then be rototilled AGAIN , and a pre-emerence and starter fertilizer will be applied.
2. The planting bed will then be hand raked smooth and crowned for proper drainage.
3. Dig the hold twice as wide as the plant's rootball. Install the plant in the hole. Backfill around the plant.
4. Install the weed barrier cloth, overlapping it at the ends. Utilize steel staples to keep the weed barrier cloth in place.
5. A two inch depth of mulch will then be installed as a top dressing, covering the entire planting area.

TURF AREA PREPARATION

1. The General Contractor will leave all turf areas (excluding the detention ponds) at two (2) inches below final grade. The Landscape Contractor shall import and spread a compacted two inch depth of loamy topsoil - ensuring the soil is compacted.
2. Landscape Contractor will ensure all areas are crowned for proper drainage
3. Apply the starter fertilizer.

SODDING

1. Sod variety to be as specified on the Landscape Plan.
2. Lay sod within 24 hours from the time of stripping. Do not lay if the ground is frozen.
3. Lay the sod to form a solid mass with tightly fitted joints. Butt ends and sides of sod strips - do not overlap. Stagger strips to offset joints in adjacent courses.
4. Water the sod thoroughly with a fine spray immediately after planting to obtain at least six inches of penetration into the soil below the sod.
5. Roll the sod to ensure good contact of the sod's root system with the soil underneath.

HYDROMULCHING

1. The hydromulch mix (per 1,000 sf) shall be as follows:

35#	Cellulose Fiber Mulch
2#	Fescue Seed
1#	Annual Rye Seed
10#	15-15-15 Water Soluble Fertilizer

CLEAN UP

1. During landscape preparation and planting, keep all pavement clean and all work areas in a neat, orderly condition.
2. All excavated materialswill be disposed of legally off the project site.

INSPECTION AND ACCEPTANCE

1. Upon completion of the work, provide the site clean and free of materials and suitable fro use as intended.
2. When the planting work is completed, the Owner will make an inspection to determine acceptability.
3. When the inspected planting work does not comply with the contract documents, replace the rejected work within 24 hours.
4. Landscape maintenance will continue until re-inspected by the Owner and found to be acceptable. Once acceptable, Final Acceptance will be issued, and the required maintenance period will commence.

LANDSCAPE MAINTENANCE

1. The maintenance period shall commence once Final Acceptance has been issued by the Owner, and shall continue for a period of ninety (90) days.
2. The monitoring and scheduling of the irrigation system will be the responsibility of the Landscape Contractor during this time. Coordinate all scheduling and any access requirements with the Owner.
3. Landscape maintenance shall include, but not be limited to: WEEKLY SITE VISITS FOR mowing, edging, blowing, weeding, trimming, pruning, fertilizing, weed control, insect control, disease control, re-staking, re-setting of plants to their proper grade or their upright position, and any other means to keep the plantings healthy, free of insects and diseases, and in a continual thriving condition.

WARRANTY PERIOD, PLANT GUARANTEE AND REPLACEMENTS

1. Plant materials supplied shall be warrantied to remain alive and healthy for a period of twelve (12) months after the date of Final Acceptance by Owner {seasonal annuals for 90 days from Final Acceptance}. Plants in an impaired, dead or dying condition after initial acceptance or within the warranty period shall be removed and replaced immediately to the satisfaction of the Owner.

RECORD DRAWINGS

1. Provide a minimum of (2) copies of record drawings to the Owner upon completion of work. A record drawing is a record of all changes that occurred in the field and that are documented through change orders, addenda, or contractor/consultant drawing markups.

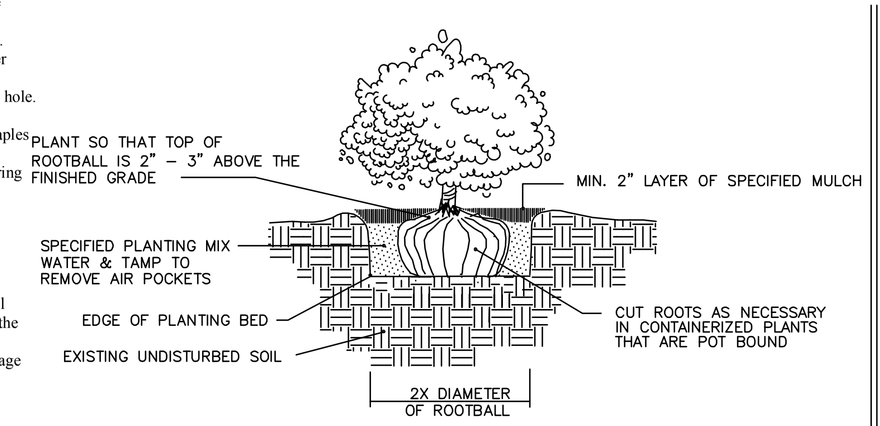

SHRUB/GROUNDCOVER PLANTING DETAIL

SCALE: NOT TO SCALE

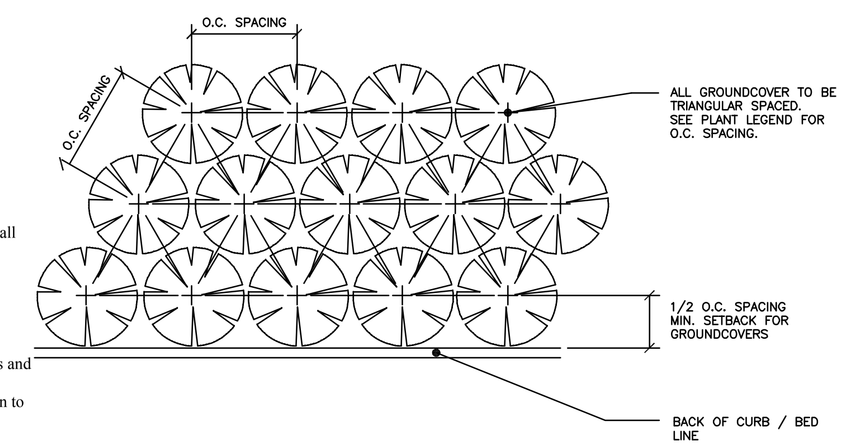

GROUNDCOVER SPACING DETAIL

SCALE: NOT TO SCALE

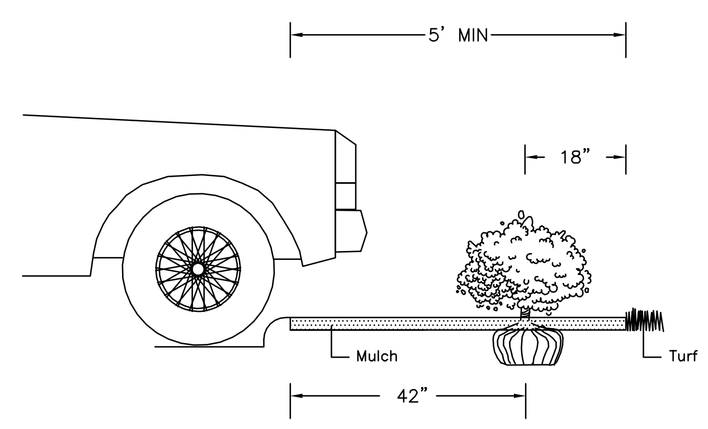

HEDGE PLANTING AT PARKING CURB

SCALE: NOT TO SCALE

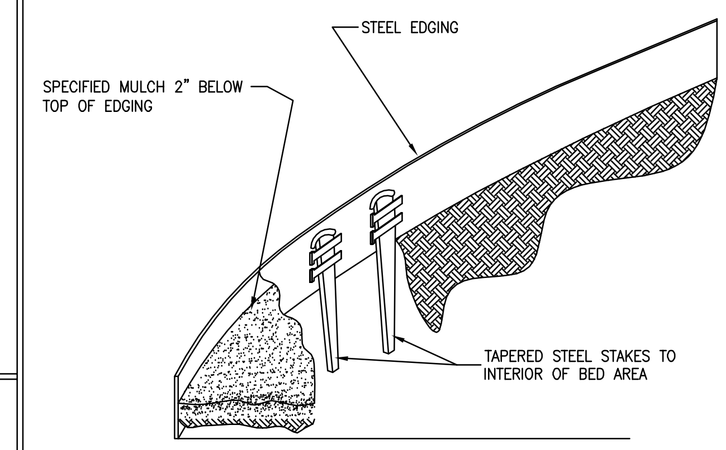

LANDSCAPE EDGING DETAIL

SCALE: NOT TO SCALE

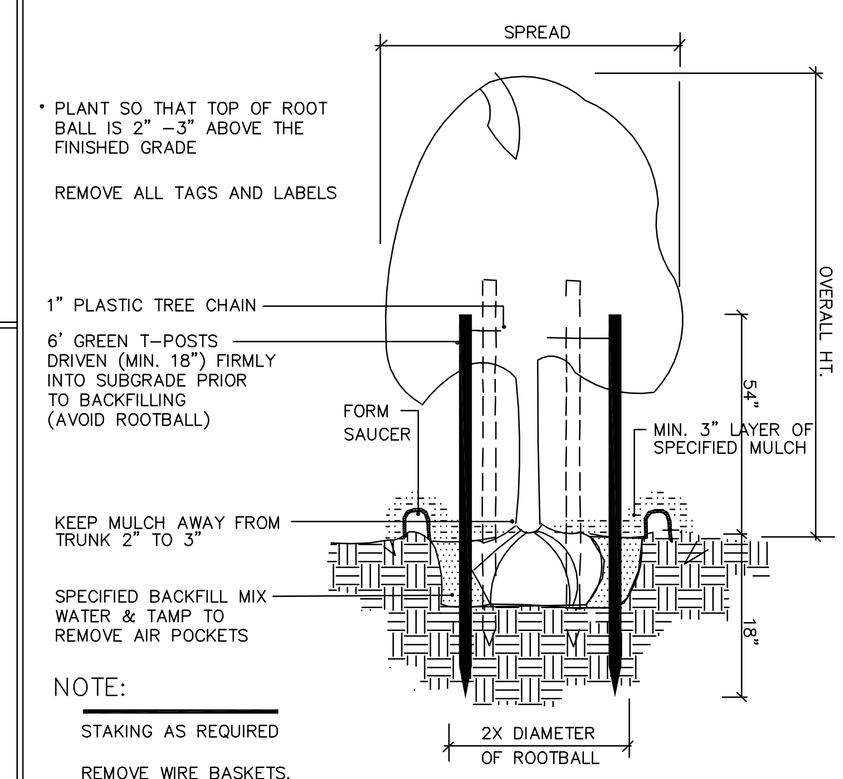

NOTE:

STAKING AS REQUIRED

REMOVE WIRE BASKETS. BEFORE TREE IS IN PIT REMOVE BOTTOM OF BASKET CUTTING HORIZONTALLY. AFTER TREE IS IN PIT REMOVE THE REST OF THE BASKET CUTTING VERTICALLY.

TREE PLANTING AND STAKING DETAIL

SCALE: NOT TO SCALE

NOVEMBER 13, 2013
DECEMBER 5, 2013

CROSSROAD ENGINEERS, PC
Transportation & Development Consultants

SHEET 703

CONCEPTUAL PUD LANDSCAPE PLAN

HOMESTEADS AT HILLVIEW

JOB No.	.	DRAWN	LMC	CHECKED	TEN
DATE	NOVEMBER 14, 2013	DESIGNED	GJI	APPR.	GJI

EVERGREEN DESIGN GROUP
Landscape Designers & Consultants
1 (800) 680 6630
519 IH-30, Ste 123
Rockwall, TX 75087
www.evergreendesigngroup.net

NO.	DATE	REVISIONS	BY	APPR.
1	12/5/13	PER TAC COMMENTS – ADDED EVERGREEN TREES AND BERM	ADH	RGM
2				
3				
4				
5				
6				
7				
8				
9				

SHEET 703

DATE/USER : 12/5/2013 10:21 AM / Alt

- **EXHIBIT F**– Street Lighting Examples

Post Top Luminaire – Acorn Shaped

This luminaire is referred to as an acorn because it is shaped similar to the small acorn that is produced by the oak tree.

This acorn shaped luminaire features a glass globe with prismatic ridges for precision photometrics and efficient lighting pattern output .

When this luminaire is mounted on a decorative pole it suggests an elegant and historical era that enhances the theme of a lighting area during both the daytime and nighttime hours.

Today this bygone era can be recaptured with the convenience of electricity and automatic controls for the lighting hours. Current technology allows the lighting output to be more energy efficient, reliable and effective than it has ever been.

The poles used for mounting this luminaire resemble the styles of the past...while producing an aesthetic appearance with practicality and durability.

Two different anchor base, foundation mounted, decorative aluminum poles are being offered for this luminaire. Both poles have fluted shafts but each has a unique shape on the lower portion. They each have a 12 foot shaft length which results in a 13 foot luminaire mounting height from ground level.

Hamilton Style Pole

Duke Energy®

Post Top Luminaire – Acorn Shaped

Application

This post top mounted luminaire is used in residential subdivisions, apartment or condominium complexes, downtown pedestrian areas, city parks, river walks, etc.

Photometrics

Lighting Output Distribution or Pattern for the Acorn Luminaire- The pole is located where the two center lines intersect. HPS or High Pressure Sodium provides a soft golden yellow light while the MH or Metal Halide provides a white light source.

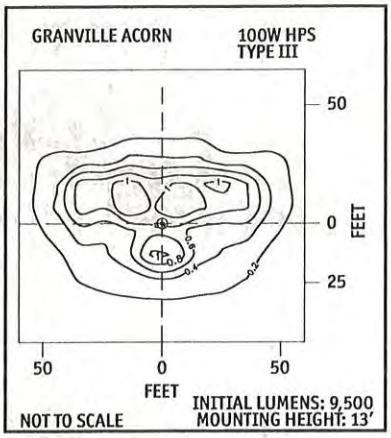

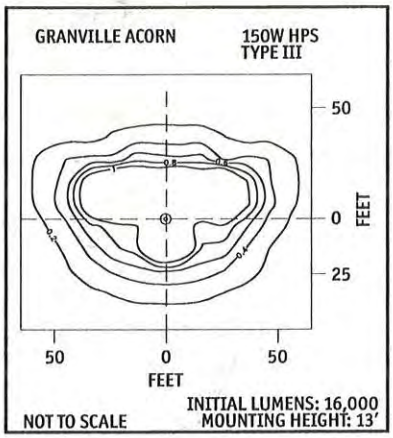

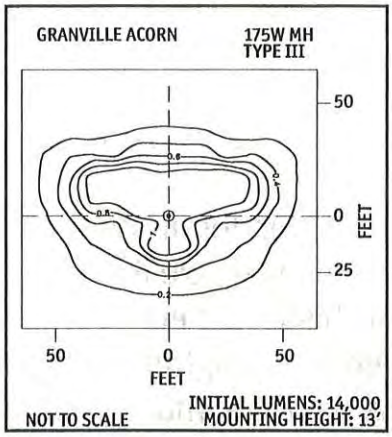

Wattage – Voltage-120V

High Pressure Sodium – 100W, 150W
Metal Halide–175W

Luminaire Construction

This acorn luminaire has cast aluminum housing with black, polyester, powder coat finish. The pull out power module, holds the ballast, terminal block, and plug-in starter, along with the hidden twistlock photocontrol, which uses a small window to measure outside light for off and on control.

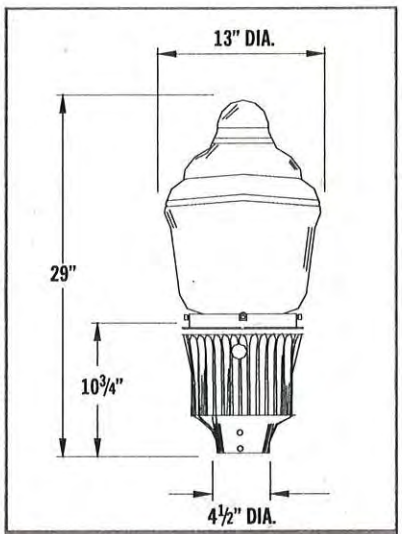

Approximate dimensions and features of this luminaire style.

Photometrics

The most common photometric pattern for this luminaire is Type III and this is considered a semi-cutoff off. (See above photometric patterns for examples.)

Mounting

This luminaire mounts directly onto a three- inch diameter tenon at the top of the pole.

Installation

This lighting equipment is installed with underground conductor and electrical facilities.

Washington Style Pole

Duke Energy®

- **EXHIBIT G**– Signage Examples

Serenity
Woods

CLAYBOURNE

Whitetail
Woods

STOP
422-9000

Serenity Woods Ln
DUKE
422-9000
FOR SALE

SPEED
LIMIT
20
NO
SOLICITING

- **EXHIBIT H**– Homesteads at Hillview Written Commitments, Covenants and Declarations

DECLARATION OF COVENANTS AND RESTRICTIONS
OF
HOMESTEADS AT HILLVIEW (VILLAGE GREEN, HOMESTEAD, AND PRESERVE)

TABLE OF CONTENTS

ARTICLE I DEFINITIONS 2
Section 1. 2
Section 2. 6

ARTICLE II APPLICATION OF COVENANTS AND RESTRICTIONS 6
Section 1. Residential and Golf Course Use 6
Section 2. Occupants Bound 6

ARTICLE III OWNERS' DUTIES AS TO LOT MAINTENANCE 6
Section 1. Sidewalks 6
Section 2. Sight Distances at Intersections 6

Section 3. Ground Elevations and Erosion Control 7
Section 4. Ditches and Swales and Erosion Control 7

ARTICLE IV DECLARATION: COMMON AREAS AND RIGHTS THEREIN 7
Section 1. Declaration 7
Section 2. Easement to Owner 7
Section 3. Landscape Easement 7

Section 4. Sales Office 8

ARTICLE V OBLIGATIONS OF DECLARANT AS TO COMMON AREAS 8
Section 1. Agreement to Construct and Convey Other Common Areass 8
Section 2. Additional Common Areass at Declarant's Option 9

ARTICLE VI ASSOCIATION; MEMBERSHIP; VOTING; FUNCTIONS 9
Section 1. Membership in Association 9
Section 2. Voting Rights 9
Section 3. Functions 10

ARTICLE VII BOARD OF DIRECTORS 10
Section 1. Management 10
Section 2. Initial Board of Directors 10
Section 3. Additional Qualifications 11
Section 4. Term of Office, Vacancy and Number of Directors after the Applicable Date 11
Section 5. Removal of Directors 11
Section 6. Duties of the Board of Directors 12
Section 7. Powers of the Board of Directors 13
Section 8. Limitation on Board Action 14
Section 9. Compensation 14
Section 10. Non-Liability of Directors 14
Section 11. Additional Indemnity of Directors 14
Section 12. Bond 15

Section 13. Initial Management 15

ARTICLE VIII REAL ESTATE TAXES; UTILITIES 15
Section 1. Real Estate Taxes 15
Section 2. Utilities 16

ARTICLE IX MAINTENANCE, REPAIR AND REPLACEMENT 16
Section 1. By the Owner 16
Section 2. By the Association 16
Section 3. Declarant's and the Association's Right to Perform Certain Maintenance and Removal 17

ARTICLE X POND COVENANTS 17
Section 1. Ownership of Ponds 17
Section 2. Limitations on Use of Ponds 17
Section 3. Costs of Maintenance 18

ARTICLE XI ARCHITECTURAL STANDARDS 18
Section 1. Architectural Control Committee 19
Section 2. Approval Process 19
Section 3. Power of Disapproval 19
Section 4. Duties of Committee 20
Section 5. No Waiver of Future Approvals 20
Section 6. Variance 20
Section 7. Compliance with Guidelines 20
Section 8. Non-Liability of Declarant, Committee 21
Section 9. Inspection 21
Section 10. No Compensation 21
Section 11. Rules Governing Building on Several Contiguous Lots Having One Owner 21

ARTICLE XII USE RESTRICTIONS 22
Section 1. Quiet Enjoyment 22
Secton 2. Business Use or Trade 22

Section 3. Drilling 23
Section 4. Occupancy and Residential Use of Partially Completed Residences Prohibited 23

ARTICLE XIII ASSESSMENTS 23
Section 1. Annual Accounting 23
Section 2. Proposed Annual Budget 24
Section 3. Regular Assessments 24
Section 4. Special Assessments 26
Section 5. Failure of Owner to Pay Assessments 26
Section 6. Initial Budgets and Assessments 27
Section 7. Initial Working Capital and Start-Up Fund 28

ARTICLE XIV MORTGAGES 28
Section 1. Notice to Association 28
Section 2. Notice of Unpaid Assessments 29

ARTICLE XV INSURANCE 29
Section 1. Casualty Insurance 29
Section 2. Public Liability Insurance 30
Section 3. Other Insurance 31
Section 4. General Provisions 31
Section 5. Insurance Impact 31
Section 6. Insurance by Owners 31

ARTICLE XVI CASUALTY AND RESTORATION 32

ARTICLE XVII AMENDMENT OF DECLARATION 33
Section 1. Generally 33
Section 2. Amendments by Declarant Only 33

ARTICLE XVIII ACCEPTANCE AND RATIFICATION 34

ARTICLE XIX NEGLIGENCE 35

ARTICLE XXX BENEFIT AND ENFORCEMENT 35
Section 1. Covenants Appurtenant to Land 35
Section 2. Prosecution of Violations 35

ARTICLE XXI NON-LIABILITY OF JOHNSON COUNTY DRAINAGE BOARD 36

ARTICLE XXII MISCELLANEOUS 36
Section 1. Costs and Attorneys' Fees 36
Section 2. Waiver 36
Section 3. Severability Clause 36
Section 4. Pronouns 36
Section 5. Interpretation 37

DECLARATION OF COVENANTS AND RESTRICTIONS
OF
HOMESTEADS AT HILLVIEW "COMMUNITY"

This Declaration of Covenants and Restrictions of Homesteads at Hillview "Community" ("Declaration") is made this _____ day of _____, 2014, by Homesteads at Hillview, LLC (the "Declarant").

WITNESSETH:

WHEREAS, Declarant is the Owner of real estate in City of Franklin, Johnson County, State of Indiana. which is more particularly described in Exhibit "A" attached hereto and hereby incorporated herein by reference (hereinafter referred to as the "Real Estate" or the Homesteads at Hillview Subdivision); and

WHEREAS, Declarant desires and intends to create on the Real Estate a residential community with public streets, drainage retention areas (either by Common Areas or easement), a landscaped area and identification signage fronting Eastview Drive and Upper Shelbyville Roads, and landscaping appointments within the right-of-way of the splitter island design at the entrances of Homesteads at Hillview for the benefit of such residential community, to be known as "Homesteads at Hillview Subdivision"; and

WHEREAS, Declarant desires to provide for the preservation and enhancement of the values in such community and the Common Areas and common maintenance areas therein contained, and, to this end, Declarant desires to subject the Real Estate to certain rights, privileges, covenants, restrictions, easements according to the procedure set out in Article XV, assessments, charges and liens, each and all to the extent herein provided, for the benefit of the Real Estate and each Owner of all or part thereof; and

WHEREAS, Declarant deems it desirable, for the efficient preservation of the values in said community, to create an agency to which shall be delegated and assigned the powers of supervising, maintaining and administering any Common Areas and common maintenance areas located on the Real Estate, administering and enforcing the covenants and restrictions contained in this Declaration, collecting and disbursing the assessments and charges imposed and created hereby and hereunder, and promoting the health, safety and welfare of the Owners of the Real Estate, and all parts thereof: and

WHEREAS, Declarant has caused, or will cause, to be incorporated under the Indiana Code 23-17-1, et seq., under the name "Homesteads at Hillview Homeowners Association, Inc.", or a similar name, as such agency for the purpose of exercising such functions:

NOW, THEREFORE, Declarant, as owner of the Real Estate and any Additional Property which is hereafter made subject to this Declaration hereby declares that the Real Estate is and shall be held, transferred, sold, conveyed, hypothecated, encumbered, leased, rented, used,

improved and occupied subject to the provisions, agreements, conditions, covenants, restrictions, easements, assessments, charges and liens hereinafter set forth, all of which are declared to be in furtherance of a plan for preservation and enhancement of the Real Estate, and are established and agreed upon for the purpose of enhancing and protecting the value, desirability and attractiveness of the Real Estate as a whole and of each of the Lots situated therein.

RECITALS

The Recitals are incorporated herein as if set out in full.

ARTICLE I
DEFINITIONS

Section 1. The following words and terms, when used herein or in any supplement or amendment hereto, unless the context clearly requires otherwise, shall have the following meanings:

(a) "Act" shall mean and refer to the Indiana Nonprofit Corporation Act of 1991, as amended;

(b) "Applicable Date" shall mean and refer to the date determined pursuant to Article IV, Section 2(b) of this Declaration;

(c) "Applicable Date or Declarant Turnover Date" refers to the time at which the Declarant relinquishes control of the governance of the Association as detailed on Article IV.

(d) "Articles" shall mean and refer to the Articles of Incorporation of the Association, as the same may be amended from time to time;

(e) "Association" shall mean and refer to Homesteads at Hillview Homeowners Association, Inc., an Indiana corporation organized under Indiana Code 23-17-1, et seq., which Declarant has caused, or will cause, to be incorporated under said name or a similar name, its successors and assigns;

(f) "Board" or "Board of Directors" shall mean and refer to the governing body of the Association elected, selected or appointed as provided for in the Articles, Bylaws and this Declaration;

(g) "Bylaws" shall mean and refer to the Code of Bylaws of the Association, as the same may be amended from time to time:

(h) "Committee" shall mean and refer to the "Homesteads at Hillview Architectural Control Committee", the same being the committee or entity established pursuant to Article IX of this Declaration for the purposes herein stated;

(i) "Common Areas" – reference is made to the Detailed PUD Plan for the Homesteads at Hillview project which is attached hereto as Exhibit C and made a part hereof.

Common Areas #5, Pond #3, is interior to Lots 57-70 and Hillview Country Club Golf Course, Common Areas #6, Pond #2, is interior to Lot's 71-93, Common Areas #8, Pond #4, is interior to Lots 128-139, Common Areas # 2, Pond #1, is interior to Lot's 11-23 are inclusive and are not general Common Areas but is limited area for the use of the lot owners and guests and invitees of these specific lots that surround these noted ponds, and which are part of the drainage system of the entire subdivision.

As respects the Ponds herein detailed are located in an easement as hereafter detailed, "NEITHER THE DECLARANT OR THE ASSOCIATION MAKE ANY REPRESENTATION THAT ANY CERTAIN LEVEL OF WATER WILL BE MAINTAINED IN THE PONDS." The exclusive use of the designated Pond by the designated owners, their guests and invitees is, however, subject to Association rules, regulations and restrictions and subject to access by the Declarant, the Association and authorities who oversee surface water drainage, with the former requiring access to comply with their obligation of upkeep, maintenance and repair.

Homestead Boulevard runs through The Homesteads and into the Hillview Country Club Golf Course. Homestead Boulevard may be used by Owners and their guests for ingress/egress, as well as visitors and members of the Hillview Country Club as an entrance to the Country Club. In addition, there shall be a cross walk and/or cross path allowing golf cart ingress / egress and/or pedestrian traffic to cross the road for access to the Hillview Country Club Golf Course hole #11.

Common Area #5 contains a tee box, pond and golf cart drive which the members and guests of Hillview Country Club Golf Course are permitted to use for ingress/egress to adjacent golf course hole #11.

(j) "Common Expenses" shall mean and refer to expenses of administration of the Association, and expenses for the upkeep, maintenance, repair and replacement of the Common Areas [subsection (i)] and the common maintenance areas [subsection (k)], and all sums lawfully assessed against the Owners by the Association, and all sums, costs and expenses now declared by this Declaration to be Common Expenses. The Common Expenses arise out of and concern, but are not limited to, the following:

(k) "Common Maintenance Areas" This definition refers to easement areas within the subdivision, some of which are within or outside platted lot, with others located within dedicated street rights-of-way by virtue of encroachment permits.

Reference is made to the Conceptual Plan, Exhibit B, for the details of these areas.

Ponds - The Ponds are within an easement that is also part of the surface water drainage system of the entire subdivision. The use of these Ponds is limited to the owners and guests and invitees of these specific lots noted but subject in like manner to rules, regulations, restrictions, access and maintenance as detailed above for the Ponds.

Landscape, Easement, Utility Easement and Sign Easement Area Parallel/Angled to Eastview Drive and Upper Shelbyville Roads and Entrances from. - Entrance identification signage and complementary landscaping at the entrance to Homesteads at Hillview Drive will be provided by the Declarant along with mounding and landscape materials parallel to Eastview Drive and Upper Shelbyville Road which blends into the natural foliage within the easement areas. The Declarant/Association reserve the right, without the obligation, to electrify the identification sign and to irrigate the complementary landscaping of the sign and any other landscaping within the easements of Lot #1 and Lot #34.

The maintenance and manicure of grass once installed shall be the obligation of the Lot owner within these easement areas with the maintenance and/or replacement of landscaping shrubs and trees being the obligation of the Association, unless otherwise notified.

Landscaping Appointments within Dedicated Rights-of-Way (by Encroachment Permits) - This island at the entranceway and the roundabout island and four separate splinter islands in the roundabout at the intersection of Homesteads at Hillview Drive and Homesteads at Hillview Court shall have landscaping installed by the Declarant and thereafter maintained by the Association.

Street Lights (if any) - If the Declarant or the Association should enter into a lease for subdivision street lighting, the lease payments occasioned thereby shall be an obligation of the Association.

Utility Fees - All utility user fees to serve the Common Areas and Common Maintenance Areas.

Fifty percent (50%) of the cost of counsel expenses to create this Declaration and Homesteads at Hillview Homeowners Association, including, but not limited to, Articles of Incorporation, By-Laws, Secretary of State file fee and initial minutes.

(l) "Community or Project" refers to the Homesteads at Hillview project as it is developed and as it continues to exist after the Applicable Date.

(m) "Declarant"/"Developer" shall mean and refer to Homesteads at Hillview, LLC, an Indiana limited liability company, and any successors and assigns of Homesteads at Hillview, LLC whom it designates in one or more written recorded instruments to have the rights of Declarant hereunder, including, but not limited to, any mortgagee acquiring title, to any portion

of the Real Estate pursuant to the exercise of rights under, or foreclosure of, a mortgage executed by Declarant;

(n) "Dwelling Unit" shall mean and refer to any building, structure or portion thereof situated on the Real Estate designed and intended for use and occupancy as a residence by one (1) single family;

(o) "Lot" shall mean and refer to any and each portion of the Real Estate (excluding any part of the Common Areas) designed and intended for use as a building site for, or developed and improved for use as, a Dwelling Unit (which shall be deemed to include any other buildings or improvements appurtenant to such Dwelling Unit), as designated by Declarant by its deed of the same to another Person. A Lot will not necessarily be the same as any single numbered parcel of land shown upon, and identified as a Lot on, any recorded subdivision plat of the Real Estate or any part thereof. For purposes of this Declaration, a "Lot" may be (i) any single numbered parcel of land identified as a Lot on such subdivision plat, (ii) part of such a numbered parcel of land, (iii) such a numbered parcel of land combined with part or all of another such numbered parcel of land, or (iv) parts or all of two (2) or more of such numbered parcels of land combined. The determination of what portion of the Real Estate constitutes a "Lot" for purposes of this Declaration shall be made by reference to, and shall mean, each tract of land conveyed by Declarant to another Person for use as a building site for, or developed and improved for use as, a Dwelling Unit (which shall be deemed to include any other buildings or improvements appurtenant to such Dwelling Unit). Notwithstanding the foregoing, if after the initial conveyance of a portion of the Real Estate by Declarant to another Person it is agreed between Declarant and such Person to enlarge or reduce or otherwise change the portion of the Real Estate so originally conveyed to such Person as a "Lot", then the determination of what portion of the Real Estate constitutes such "Lot" for purposes of this Declaration shall be made by reference to, and shall mean, such "Lot" initially so conveyed by Declarant, as the same has been adjusted or changed at any time by conveyances by and between Declarant and such Person. Any deed or other instrument of conveyance so adjusting or changing the description of a "Lot" shall state on its face that it is made for such purpose. Any part of a "Lot" reconveyed to Declarant shall, upon such reconveyance, lose its character as part of a "Lot" and may thereafter be conveyed by Declarant as part of another "Lot". The foregoing procedures may be used to correct errors in descriptions, to adjust boundary lines of "Lots" or for any other reason;

(p) "Member" means a member of the Association.

(q) "Mortgages" shall mean and refer to the holder of a recorded first mortgage lien on a Lot or Dwelling Unit;

(r) "Owner" shall mean and refer to the record Owner, whether one or more Persons, of the fee simple title to any Lot, but in any event shall not include or mean or refer to a mortgagee or tenant unless and until such mortgagee or tenant has acquired title to any Lot, but upon so acquiring title to any Lot a mortgagee or tenant shall be an Owner;

(s) "Person" shall mean and refer to an individual, firm, corporation, partnership, association, trust, or other legal entity, or any combination thereof;

(t) "Properties" shall mean and refer to the real property described in Exhibit "A" attached hereto;

(u) "The Real Estate" shall mean and refer to the parcel of real estate in Johnson County, Indiana, described in Exhibit "A" attached to this Declaration, as referred to in the first recital clause of this Declaration, and defined therein as the Real Estate;

(v) "Restrictions" shall mean and refer to the agreements, conditions, covenants, restrictions, easements, assessments, charges, liens and all other provisions set forth in this Declaration, as the same may be amended from time to time;

(w) "Rules and Regulations" – rules and regulations relative to the use, occupancy, operation and enjoyment of the Real Estate and the Common Areas as authorized under Article V, Section 7(g).

Section 2. Other terms and words defined elsewhere in this Declaration shall have the meanings herein attributed to them.

ARTICLE II
APPLICATION OF COVENANTS AND RESTRICTIONS

Section 1. Residential and Golf Course Use. The Properties shall be used for single family residential purposes and a golf course in Homestead Common Area #5; provided, however, that such restriction shall not apply to any Lot or part thereof or any other part of the Properties at any time owned by the Association which constitutes a part of the Common Areas and upon which no Dwelling Unit is located.

Section 2. Occupants Bound. All provisions of the Declaration, Bylaws and of any rules and regulations or use restrictions promulgated pursuant thereto which govern the conduct of Owners and which provide for sanctions against Owners shall also apply to all occupants, guests and invitees of any Owner. Every Owner shall cause all occupants of his or her Lot to comply with the Declaration, Bylaws and the rules and regulations adopted pursuant thereto, and shall be responsible for all violations and losses to the Association caused by such occupants, notwithstanding the fact that such occupants of a Lot are fully liable and may be sanctioned for any violation of the Declaration, Bylaws and rules and regulations adopted pursuant thereto.

ARTICLE III
OWNERS DUTIES AS TO LOT MAINTENANCE

Section 1. Sidewalks. Sidewalks shall be constructed as required by the sidewalk plan approved by the City of Franklin Plan Commission, which construction shall be the responsibility of the lot owner upon whose lot the sidewalk is to be constructed; provided,

however, that any Common Area sidewalks shall be constructed by the Developer as designated on the final development sidewalk plan. All sidewalks to be constructed by lot owners shall be completed at such times as the driveway on the lot is constructed. All sidewalks shall be poured concrete, with expansion joints, such construction to be perpetual and continuous along the street frontages and across the driveway of each Lot. In the event any Owner, or parties with whom Owner contracts for work on the Owner's Lot, causes damage to a sidewalk or street curb, such Owner shall be responsible for repairing said damages.

Section 2. Sight Distances at Intersections. All property located at street intersections shall be landscaped so as to permit safe sight across the street corners. No fence, wall, hedge, or shrub planting shall be placed or permitted to remain where it would create a traffic or sight problem.

Section 3. Ground Elevations and Erosion Control. It shall be the lot Owner's responsibility to maintain and comply with all building and site finish ground elevations and erosion control as finally required and approved by the City of Franklin Drainage Board and the Department of Planning and Zoning as evidenced upon the final construction plans for the development of this Subdivision.

Section 4. Ditches and Swales and Erosion Control. It shall be the duty of the Owner of any Lot on which any part of an open storm drainage ditch or swale is situated to keep such portion thereof as may be situated upon his Lot continuously unobstructed (both by improvements and plant material) and in good repair, and to provide for the installation of such culverts upon said Lot as may be reasonably necessary. It shall be the duty of the Owner of any Lot to establish as needed and to maintain all erosion control on his or her respective Lot.

ARTICLE IV
DECLARATION: COMMON AREAS AND RIGHTS THEREIN

Section 3. Declaration. Declarant hereby expressly declares that the Properties shall be held, transferred and occupied subject to the Restrictions as Covenants running with the Real Estate. The Owners of any Lot subject to these Restrictions, and all other Persons, by (i) acceptance of a deed conveying title thereto, or the execution of a contract for the purchase thereof, whether from Declarant or a subsequent Owner of such Lot, or (ii) by the act of occupancy of any Lot, shall conclusively be deemed to have accepted such deed, executed such contract and undertaken such occupancy subject to each Restriction and agreement herein contained. By acceptance of such deed, or execution of such contract, or undertaking such occupancy, each Owner and all other Persons acknowledge the rights and powers of Declarant, the Committee and of the Association with respect to these Restrictions, and also for itself, its heirs, personal representatives, successors and assigns, covenant, agree and consent to and with Declarant, the Committee, the Association, and the Owners and subsequent Owners of each of the Lots affected by these Restrictions to keep, observe, comply with and perform such Restrictions and agreement.

Section 4. Easement to Owner. Declarant hereby grants a non-exclusive easement in favor of the Owners of Lots noted in Article I, Section (i) for the use, enjoyment and benefit of

the single Common Areas herein referred to as Ponds. This use, enjoyment and benefit is limited to the Owners of these designated Lots to the exclusion of other Lots) subject to all of the Restrictions of this Declaration, and such easement shall be an easement running with and appurtenant to each Lot.

Section 5. Landscape Easement. There are strips and areas of ground shown titled as various easements on the Final Plat for the Real Estate which are hereby reserved for the use of owners of Lots to the extent and limited for the purposes set forth in the Declaration and for the use of Declarant and Association for the installation, maintenance, repair and replacement of the matters detailed in the Declaration requiring maintenance. Except as installed and maintained by Lot owners, pursuant to the requirements of the Declarations, or by Declarant and the Association, no permanent or other structure (except walls, sidewalks and fences otherwise permitted hereby or by the Declarant and approved by the Committee) shall be erected or maintained on said strips and areas by the owner of any Lot subject to any such "Landscape Easement", and the owners of such Lots affected by any such "Landscape Easement" shall take and hold title to their Lots subject to the foregoing rights of the Declarant and the Association and shall not do or permit to be done anything which will obstruct or interfere with or remove any installations or landscaping made by the Declarant or Association in any such "Landscape Easement". The foregoing grant of rights to the Declarant shall not impose an obligation on the Declarant to undertake such maintenance unless it elects to do so.

Section 6. Sales Office. To the extent deemed necessary or desirable by Developer, Developer shall be permitted to place sales offices and construction and storage facilities for uses attributable to the construction, development, marketing and maintenance of the Subdivision on any unsold Lot in the Subdivision until 180 days following the sale, closing and deed transfer to a Lot owner other than Developer of the last Lot in the Subdivision.

ARTICLE V
OBLIGATIONS OF DECLARANT AS TO COMMON AREASS

Section 1. Agreement to Construct and Convey Other Common Areas. Declarant has constructed or provided for, or will prior to the Applicable Date construct or provide for, Common Areas consisting of the following items:

(a) a storm drainage system for the Real Estate which may include Ponds, inlet pipes, open ditches, swales, pipes and other structures and drainage courses.

(b) the installation in the landscape easements of landscaping;

(c) the installation of identification signage and complementary landscaping in the landscape easements;

(d) the installation of landscaping, within the street rights-of-way areas for the entrance island and interior splinter islands;

(e) the installation of such utilities as Declarant, in its discretion, chooses to install to serve (a), (b), (c) or (d) above.

Upon substantial completion of what is described in this Section 1, or earlier if the Association and the Declarant are willing to convey and accept same subject to agreed conditions, when Owner Board Members (excluding Declarant) are at least equal to Declarant Board Members (non-owners, including Declarant). In no event will the single Common Areas be conveyed lien free and completely constructed later than the Applicable Date. Declarant covenants to convey by quitclaim deed all of its right, title and interest in and to said Common Areas to the Association and all Declarant's right, title and interest in and to said items (whether owned in fee or by easements) which thereafter shall be the property of the Association, whether or not the same may be located entirely or partially on any one or more of the Lots.

Section 2. Additional Common Areas at Declarant's Option. Declarant may, at its option but without obligation to do so, construct, install or provide for other items for or on, or services to serve, the Real Estate as amenities for, the mutual benefit, use or enjoyment of the Owners.

ARTICLE VI
ASSOCIATION; MEMBERSHIP; VOTING; FUNCTIONS

Section 1. Membership in Association. Declarant and each Owner of a Lot shall, automatically upon becoming an Owner, be and become a member of the Association and shall remain a member until such time as his ownership of a Lot ceases, but membership shall terminate when such Owner ceases to be an Owner, and membership will be transferred to the new Owner of his Lot; provided, however, that any Person who holds the interest of an Owner in a Lot merely as security for the performance of an obligation shall not be a member until and unless he realizes upon his security, at which time he shall automatically be and become an Owner and a member of the Association.

Section 2. Voting Rights. The Association shall have the following classes of membership, with the following voting rights:

(f) Class A. Class A members shall be all Owners except Class B members. Each Class A member shall be entitled to one (1) vote for each Lot of which such member is the Owner with respect to each matter submitted to a vote of members upon which the Class A members are entitled to vote. When more than one (1) Person constitutes the Owner of a particular Lot, all such Persons shall be members of the Association, but all of such Persons shall have only one (1) vote for such Lot, which vote shall be exercised as they among themselves determine, but in no event shall more than one (1) vote be cast with respect to any such Lot.

(g) Class B. Class B members shall be Declarant and all successors and assigns of Declarant designated by Declarant as Class B members in a written notice mailed or delivered to the resident agent of the Association. Each Class B member shall be entitled to four (4) votes for each Lot of which it is the Owner on the recorded subdivision plat of the Real Estate, on all

matters requiring a vote of the members of the Association. THE CLASS B MEMBERSHIP SHALL CEASE AND TERMINATE UPON THE FIRST TO OCCUR OF

(i) THIRTY (30) DAYS AFTER THE DATE UPON WHICH THE WRITTEN RESIGNATION OF THE CLASS B MEMBERS IS DELIVERED TO THE RESIDENT AGENT OF THE ASSOCIATION, OR

(ii) THIRTY (30) DAYS AFTER THE DATE WHEN THE CLASS A VOTES EQUAL THE CLASS B VOTES.

(iii) TEN (10) YEARS AFTER THE DATE OF RECORDATION OF THIS DECLARATION.

The Date applicable to the above is hereinafter referred to as the Applicable Date.

After the Applicable Date, Class B memberships shall be converted to Class A memberships, and each former Class B member shall be entitled to one, (1) Class A membership for each Lot owned.

Section 3. Functions. The Association has been (or will be) formed for the purpose of providing for the maintenance, repair, replacement, administration, operation and ownership of the Common Areass as and to the extent provided herein, to pay taxes assessed against and payable with respect to these Common Areass, to pay any other necessary expenses and costs in connection with these Common Areass, and to perform such other functions as may be designated for it to perform under this Declaration.

ARTICLE VII
BOARD OF DIRECTORS

Section 1. Management. The business and affairs of the Association shall be governed and managed by the Board of Directors. No person shall be eligible to serve as a member of the Board of Directors unless he is, or is deemed in accordance with this Declaration to be, an Owner, or a person appointed by Declarant as provided in Section 2 of this Article V.

Section 2. Initial Board of Directors. The initial Board of Directors shall be composed of the persons designated or to be designated, in the Articles, to-wit: Michael J. Duke as the sole director (herein referred to as the "Initial Board"), who has been or shall be appointed by Declarant. Notwithstanding anything to the contrary contained in, or any other provision of, this Declaration, the Articles, the Bylaws or the Act (a) the Initial Board shall hold office until the first annual meeting of the members of the Association occurring on or after the Applicable Date, and (b) in the event of any vacancy or vacancies occurring in the Initial Board for any reason or cause whatsoever prior to such first annual meeting occurring on or after the Applicable Date determined as provided above, every such vacancy shall be filled by a person appointed by Declarant, who shall thereafter be deemed a member of the Initial Board. Each Owner, by acceptance of a deed to a Lot, or by acquisition of any interest in a Dwelling Unit by any type of juridic acts inter vivos or causa mortis, or otherwise, shall be deemed to have

appointed Declarant as such Owner's agent, attorney-in-fact and proxy, which shall be deemed coupled with an interest and irrevocable until the Applicable Date determined as provided above, to exercise all of said Owner's right to vote, and to vote as Declarant determines, on all matters as to which members of the Association are entitled to vote under the Declaration, the Articles, the Bylaws, the Act or otherwise. This appointment of Declarant as such Owner's agent, attorney-in-fact and proxy shall not be affected by incompetence of the Owner granting the same. Each Person serving on the Initial Board, whether as an original member thereof or as a member thereof appointed by Declarant to fill a vacancy, shall be deemed a Special member of the Association and an Owner solely for the purpose of qualifying to act as a member of the Board of Directors and for no other purpose. No such person serving on the Initial Board shall be deemed or considered a member of the Association nor an Owner of a Lot for any other purpose (unless he is actually the Owner of a Lot and thereby a member of the Association).

Section 3. Additional Qualifications. Where an Owner consists of more than one Person or is a partnership, corporation, trust or other legal entity, then one of the Persons constituting the multiple Owner, or a partner or an officer or trustee shall be eligible to serve on the Board of Directors, except that no single Lot or Dwelling Unit may be represented on the Board of Directors by more than one Person at a time.

Section 4. Term of Office, Vacancy and Number of Directors after the Applicable Date.

(h) Term. Subject to the provisions of Section 2 of this Article V, the entire membership of the Board of Directors shall be elected at each annual meeting of the Association. The Initial Board shall be deemed to be elected and re-elected as the Board of Directors at each annual meeting until the first annual meeting of the members occurring on or after the Applicable Date provided herein. After the Applicable Date, each member of the Board of Directors shall be elected for a term of one (1) year. Each Director shall hold office throughout the term of his election and until his successor is elected and qualified.

(i) Number of Directors after Applicable Date. The number of Directors to serve on the Board after the Applicable Date shall be a minimum of three (3) with a maximum of five (5) directors.

(j) Vacancies. Subject to the provisions of Section 2 of this Article V as to the Initial Board, any vacancy or vacancies occurring in the Board shall be filled by a vote of a majority of the remaining members of the Board or by vote of the Owners if a Director is removed in accordance with Section 5 of this Article V. The Director so filling a vacancy shall serve until the next annual meeting of the members and until his successor is elected and qualified. At the first annual meeting following any such vacancy, a Director shall be elected for the balance of the term of the Director so removed or in respect to whom there has otherwise been a vacancy.

Section 5. Removal of Directors. A Director or Directors, except the members of the Initial Board, may be removed with or without cause by vote of a majority of the votes entitled to be cast at a special meeting of the Owners duly called and constituted for such purpose. In such case, his successor shall be elected at the same meeting from eligible Owners

nominated at the meeting. A Director so elected shall serve until the next annual meeting of the Owners or until his successor is duly elected and qualified.

Section 6. Duties of the Board of Directors. The Board of Directors shall be the governing body of the Association representing all of the Owners and being responsible for the functions and duties of the Association, including but not limited to providing for the administration of the Real Estate, the management, maintenance, repair, upkeep and replacement of the Common Areas and Common Maintenance Areas (unless the same are otherwise the responsibility or duty of Owners), and the collection and disbursement of the Common Expenses. After the Applicable Date, the Board may employ a Managing Agent upon such terms as the Board shall find, in its discretion, reasonable and customary. The Managing Agent, if one is employed, shall assist the Board in carrying out its duties, which include, but are not limited to:

(k) protection and surveillance of the Common Areas and Common Maintenance Areas, unless the same are otherwise the responsibility or duty of Owners of Lots; provided, however, that this duty shall not include or be deemed or interpreted as a requirement that the Association, the Board or any Managing Agent must provide any on-site or roving guards, security service or security system for protection or surveillance, and the same need not be furnished;

(l) procuring of utilities used in connection with the Lots, Dwelling Units and Common Areas and Common Maintenance Areas (to the extent the same are not provided and billed directly to Owners of Lots and Dwelling Units by utility companies);

(m) landscaping, maintenance and upkeep of, the Common Areas and the Common Maintenance Areas;

(n) assessment and collection from the Owners of the Owners' respective shares of the Common Expenses;

(o) preparation of the proposed annual budget, a copy of which will be mailed or delivered to each Owner at the same time as the notice of the annual or special meeting at which the same is to be acted upon is mailed or delivered;

(p) preparing and delivering annually to the Owners a full accounting of all receipts and expenses incurred in the prior year; if possible, such accounting shall be delivered to each Owner simultaneously with delivery of the proposed annual budget for the current year;

(q) keeping a current, accurate and detailed record of receipts and expenditures affecting the Common Areas and Common Maintenance Areas and the business and affairs of the Association, specifying and itemizing the Common Expenses; all records and vouchers shall be available for examination by an Owner at any time during normal business hours by reasonable pre-arrangement;

(r) procuring and maintaining for the benefit of the Association, the Owners, any Managing Agent and the Board the insurance coverage's required under this Declaration and

such other insurance coverage's as the Board, in its sole discretion, may deem necessary or advisable;

(s) paying taxes and assessments assessed against and payable with respect to the Common Areas and Common Maintenance Areas and paying any other necessary expenses and costs in connection with the Common Areas and the Common Maintenance Areas; and

(t) all duties and obligations imposed upon the Association or the Board under this Declaration, the Articles, the Bylaws or the Act.

Section 7. Powers of the Board of Directors. The Board of Directors shall have such powers as are reasonable and necessary to accomplish the performance of their duties. These power include, but are not limited to, the power:

(u) to employ a Managing Agent to assist the Board in performing its duties;

(v) to purchase, lease or otherwise obtain for the Association, to enable it to perform its functions and duties, such equipment, materials, labor and services as may be necessary in the judgment of the Board of Directors.

(w) to employ legal counsel, architects, Contractors, accountants and others as in the judgment of the Board of Directors may be necessary or desirable in connection with the business and affairs of the Association;

(x) to employ, designate, discharge and remove such personnel as in the judgment of the Board of Directors may be necessary for the maintenance, upkeep, repair and replacement of the Common Areas and Common Maintenance Areas, and to perform all other maintenance, upkeep, repair and replacement duties of the Association and the Board;

(y) to include the costs of performing all of its functions, duties and obligations as Common Expenses and to pay all of such costs therefrom;

(z) to open and maintain a bank account or accounts in the name of the Association;

(aa) to promulgate, adopt, revise, amend and alter from time to time such additional Rules and Regulations with respect to use, occupancy, operation and enjoyment of the Real Estate, the Common Areas (in addition to those set forth in this Declaration) as the Board, in its discretion, deems necessary or advisable; provided, however, that copies of any such additional rules and regulations so adopted by the Board shall be promptly delivered to all Owners; and

(bb) to grant to such public or private companies, entities or bodies as the Board may approve, such easements as may be necessary to provide the Lots, Dwelling Units and Common Areas and Common Maintenance Areas with facilities for utility and similar services, including but not limited to cable television facilities and service, provided that such easements are located within or are coextensive with any one or more utility easements, maintenance and access easement, landscape and maintenance easements, or Common Areas shown upon, and identified as such on, or provided for in, the subdivision plat of the Real Estate.

(cc) to borrow funds to perform its duties for the benefit of the Association and Owners and use the assessments as collateral, if collateral is required, to secure such financing.

Section 8. Limitation on Board Action. After the Applicable Date, the authority of the Board to enter into contracts shall be limited to contracts involving a total expenditure of less than $10,000.00 per year without obtaining the prior approval of a majority of the cumulative vote of the Owners, except that in the following cases such approval shall not be necessary;

(dd) contracts for replacing or restoring portions of the Common Areas or Common Maintenance Areas damaged or destroyed by fire or other casualty where the cost thereof is payable out of insurance proceeds actually received or for which the insurance carrier has acknowledged coverage;

(ee) proposed contracts and proposed expenditures expressly set forth in the proposed annual budget as approved by the Owners at the annual meeting; and

(ff) expenditures necessary to deal with emergency conditions in which the Board of Directors reasonably believes there is insufficient time to call a meeting of the Owners.

Section 9. Compensation. No Director shall receive any compensation for his services as such except to such extent as may be expressly authorized by a majority vote of the Owners. The Managing Agent, if any is employed, shall be entitled to reasonable compensation for its services, the cost of which shall be a Common Expense.

Section 10. Non-Liability of Directors. The Directors shall not be liable to the Owners or any other Persons for any error or mistake of judgment exercised in carrying out their duties and responsibilities as Directors, except for their own individual willful misconduct, bad faith or gross negligence. The Association shall indemnify and hold harmless and defend each of the Directors against any and all liability to any person, firm or corporation arising of contracts made by the Board on behalf of the Association, unless any such contract shall have been made in bad faith. It is intended that the Directors shall have no personal liability with respect to any contract made by them on behalf of the Association.

Section 11. Additional Indemnity of Directors. The Association shall indemnify, hold harmless and defend any Person, his heirs, assigns and legal representatives, made a party to any action, suit or proceeding by reason of the fact that he is or was a Director of the Association, against the reasonable expenses, including attorneys' fees, actually and necessarily incurred by him in connection with the defense of such action, suit or proceeding, or in connection with any appeal therein, except as otherwise specifically provided herein in relation to matters as to which it shall be adjudged in such action, suit or proceeding that such Director is liable for gross negligence or misconduct in the performance of his duties. The Association shall also reimburse to any such Director the reasonable costs of settlement of or judgment rendered in any action, suit or proceeding, if it shall be found by a majority vote of the Owners that such Director was not guilty of gross negligence or misconduct. In making such findings and notwithstanding the adjudication in any action, suit or proceeding against a Director, no Director shall be considered or deemed to be guilty of or liable for negligence or misconduct in the performance of his duties where, acting in good faith, such Director relied on the books and

records of the Association or statements or advice made by or prepared by the Managing Agent (if any) or any officer or employee thereof, or any accountant, attorney or other person, firm or corporation employed by the Association to render advice or service unless such Director had actual knowledge of the falsity or incorrectness thereof; nor shall a Director be deemed guilty of or liable for negligence or misconduct by virtue of the fact that he failed or neglected to attend a meeting or meetings of the Board of Directors.

Section 12. Bond. The Board of Directors may provide surety bonds and may require the Managing Agent (if any), the treasurer of the Association, and such other officers as the Board deems necessary, to provide surety bonds, indemnifying the Association against larceny, theft, embezzlement, forgery, misappropriation, wrongful, abstraction, willful misapplication and other acts of fraud or dishonesty, in such sums and with such sureties as may be approved by the Board of Directors and any such bond shall specifically include protection for any insurance proceeds received for any reason by the Board. The expense of any such bonds shall be a Common Expense.

Section 13. Initial Management. Notwithstanding anything to the contrary contained in this Declaration, Declarant shall have, and Declarant hereby reserves to itself, the exclusive right to manage or designate a Managing Agent for the Real Estate, Common Areass and Common Maintenance Areas, and to perform all the functions of the Association, until the Applicable Date. Declarant may, at its option, engage a Managing Agent affiliated with it to perform such functions and, in either case, Declarant or such Managing Agent shall be entitled to reasonable compensation for its services.

ARTICLE VIII
REAL ESTATE TAXES; UTILITIES

Section 1. Real Estate Taxes. Real estate taxes on each Lot, and on any Dwelling Unit or other improvements on each Lot, are to be separately assessed and taxed to each Lot and shall be paid by the Owner of such Lot. Any real estate taxes or other assessments against the Common Areas shall be paid by the Association and treated as a Common Expense.

Section 2. Utilities. Each Owner shall pay for his own utilities which, to the extent possible, shall be separately metered to each Lot and Dwelling Unit. Utilities which are not separately metered to an Owner's Lot or Dwelling Unit shall be treated as and paid as part of the Common Expense, unless otherwise determined by the Association. Utility expenses, if any, associated with the Common Areass and/or the Common Maintenance Areas shall be common expenses of the Association.

ARTICLE IX
MAINTENANCE, REPAIR AND REPLACEMENT

Section 3. By the Owner. Each Owner shall be responsible for, if the need therefor arises, all maintenance, repairs, decoration and replacement of his own Dwelling Unit, both interior and exterior. In addition, each Owner shall furnish and be responsible for the

maintenance of all portions of his Lot, except for such portions thereof as may, in accordance with the terms of this Declaration, be designated as a part of the Common Areass for purposes of maintenance only. All fixtures and equipment installed within or as part of a Dwelling Unit, commencing at the points where the utility lines, pipes, wires, conduits or systems enter the Lot upon which said Dwelling Unit is located, shall be maintained and kept in repair by the Owner thereof. Each Owner shall promptly perform all maintenance and repair of his Lot and Dwelling Unit which, if neglected, might adversely affect any other Lot or Dwelling or any part of the Common Areass or in the judgment of the Board negatively impact on the preservation and enhancement of values in the Homesteads at Hillview "Community" project. Such maintenance and repairs include but are not limited internal water lines, plumbing, electric lines, gas lines, appliances and other fixtures, equipment and accessories belonging to the Owner and a part of or appurtenant to his Dwelling Unit or Lot.

Section 2. By the Association. Maintenance, repairs, replacements and upkeep of the Common Areass and the Common Maintenance Areas shall (except to the extent provided herein as the obligation of Owners) be furnished by the Association, as a part of its duties, and the cost thereof shall constitute a part of the Common Expenses as detailed in 1(j).

The Board of Directors may adopt such other rules and regulations concerning maintenance, repair, use and enjoyment of the Common Areas and of Ponds as it deems necessary, provided that the same are not inconsistent with the express provisions of this Declaration.

Notwithstanding any obligation or duty of the Association to repair or maintain any of the Common Areas and Common Maintenance Areas, if, due to the willful, intentional or negligent acts or omissions of an Owner or of a member of his family or of a guest, tenant, invitee, or other occupant or visitor of such Owner, damage shall be caused to the Common Areas or the Common Maintenance Areas, or if maintenance, repairs or replacements shall be required thereby which would otherwise be at the Common Expense, then such Owner shall pay for such damage and such maintenance, repairs and replacements, as may be determined by the Association, unless such loss is covered by the Association's insurance with such policy having a waiver of subrogation clause. If not paid by such Owner upon demand by the Association, the cost of repairing such damage shall be added to and become a part of the assessment to which such Owner's Lot is subject.

The authorized representatives of the Association, the Board and the Managing Agent for the Association (if any) shall be entitled to reasonable access to any Lot as may be required in connection with maintenance, repairs or replacements of or to the Common Areas or the Common Maintenance Areas for purposes of maintenance, including, but not limited to, access to any easements reserved, granted or created by the Homesteads at Hillview subdivision plat.

Section 3. Declarant's and the Association's Right to Perform Certain Maintenance and Removal. In the event that any Owner of a Lot shall fail to maintain his Lot and any improvements, or remove any unauthorized item or structure, situated thereon in accordance with the provisions of these Restrictions and the provisions of any recorded plat of the Real Estate, the Declarant, until the Applicable Date, and, thereafter, the Association through its agents and employees or contractors, should have the right to enter upon said Lot and repair,

mow, clean, remove or perform such other acts as may be reasonably necessary, to make such Lot and improvements situated thereon, if any, conform to the requirements of these Restrictions and the provisions contained in any such plat. The cost thereof to the Declarant or the Association shall be collected as a special assessment against such Owner and his Lot in the manner provided for herein for the collection of Common Expenses. Neither the Declarant nor the Association, nor any of its agents, employees or contractors, shall be liable for any damage which may result from any maintenance work performed hereunder.

ARTICLE X
POND COVENANTS

Section 4. Ownership of Ponds. As detailed in Item 1(i) hereof, Ponds surrounded by Lots as noted is the sole Common Areas in the Homesteads at Hillview subdivision and limited in use as therein described. Homestead Common Area #2 Pond shall also be shared with Hillview Country Club as part of golfing hole and fairway usage.

Section 5. Limitations on Use of Ponds. No person shall do or permit to be done any action or activity which could result in pollution of the Ponds, diversion of water, elevation of Pond levels, earth disturbance resulting in silting or any conduct which could result in an adverse affect upon water quality, drainage of the subdivision or proper pond management.

The Ponds are and will be an integral part of the storm water drainage system serving the Real Estate and are intended to be used for such purpose and primarily as visual and aesthetic amenities and not as recreational amenities. Accordingly, no use shall be made of any of the Ponds which in any way interfere with their proper functioning as part of such storm water drainage system.

The Ponds shall be kept free and clean of rubbish, debris and other unsightly materials. No structure of any kind shall be placed in the Ponds or on the Pond property without the prior written approval of the Committee.

No boating, swimming, diving, skiing or ice skating shall be permitted in or on said Ponds except as permitted by the Board of Directors under written and promulgated Rules and Regulations.

No sewage, garbage, refuse or other solid, liquid, gaseous or other materials or items (other than storm and surface water drainage) shall be put into said ponds, except the Board of Directors may take steps to clear and purify the waters thereof by the addition of chemicals or other substances commonly used for such purposes or by providing therein structures and equipment to aerate the same.

Fishing from the shores of such ponds shall be permitted subject to obeyance and compliance with all applicable fishing and game laws, ordinances, Rules and Regulations.

Section 6. Costs of Maintenance. Estimated costs of maintenance and repair of the Pond property related to the storm water drainage system shall be included in the Common Expenses subject to general assessment for all Lots in the Homesteads at Hillview Project.

ARTICLE XI
ARCHITECTURAL STANDARDS

Nothing, including any fence, deck, recreational equipment (including basketball goals), or any structure, storage shed, doghouse or other improvements, shall be erected on any Lot, and no construction, which term shall include within its definition staking, clearing, excavation, grading, and other site work, no exterior alteration or modification of existing improvements, and no plantings or removal of plants, trees, or shrubs shall take place except in strict compliance with this Article, until the requirements below have been fully met, and until the approval of the Committee has been obtained pursuant to Section 1 below.

THIS ARTICLE SHALL NOT APPLY TO THE ACTIVITIES OF THE DECLARANT, NOR TO CONSTRUCTION OR IMPROVEMENTS OR MODIFICATIONS TO THE COMMON AREAS AND THE COMMON MAINTENANCE AREAS BY OR ON BEHALF OF THE ASSOCIATION.

THIS ARTICLE MAY NOT BE AMENDED WITHOUT THE DECLARANT'S WRITTEN CONSENT SO LONG AS THE DECLARANT OWNS ANY LAND SUBJECT TO THIS DECLARATION.

Section 1. Architectural Control Committee. There shall be, and hereby is, created and established the "Homesteads at Hillview Architectural Control Committee" ("Committee") which shall have exclusive jurisdiction over all construction on any portion of the Properties. UNTIL 100% OF THE PROPERTIES HAVE BEEN DEVELOPED AND CONVEYED TO PURCHASERS in the normal course of development and sale, the DECLARANT, or not more than five, nor less than three, persons designated by it, SHALL CONSTITUTE THE COMMITTEE AND SHALL SERVE AT THE DISCRETION OF THE DECLARANT. THERE SHALL BE NO SURRENDER OF THIS RIGHT PRIOR TO THAT TIME EXCEPT IN A WRITTEN INSTRUMENT IN RECORDABLE FORM EXECUTED BY THE DECLARANT. After the sale of 100% of the Properties, the Committee shall be a standing committee of the Association, consisting of not more than five, nor less than three, persons as may, from time to time, be provided in the Bylaws. If the Bylaws do not at any time provide for the Committee, then the Board shall be and constitute the Committee.

Section 2. Approval Process. The Committee has prepared and promulgated, on behalf of the Board of Directors, design and development guidelines and application and review procedures. Copies are on file in the office of the Declarant (or the Association, as the case may be) which are incorporated into this Declaration by reference. The guidelines and procedures shall be those of the Association, and the Committee shall have sole and full authority to prepare and to amend them. It shall make the guidelines and procedures available to Owners, builders, and developers who seek to engage in development of or construction, modification, addition or alteration made on or to any existing structure, upon all or any portion of the Properties and such

Owners and builders shall conduct their operations strictly in accordance therewith. The Committee, or its designee, must give written approval for any building contractor selected by the Lot Owner for construction.

Prior to any construction on any Lot, the approval of the Committee must be obtained after written application has been made to the Committee by the Owner of the Lot requesting authorization from the Committee. Such written application shall be made in the manner and form prescribed from time to time by the Committee in its guidelines and procedures which will contain requirements to promote the standard of quality of workmanship and design and harmony of external design with existing structures, location in relation to surrounding structures, topography and finish grade elevation as determined by the Committee.

Section 3. Power of Disapproval. The Committee may refuse to grant permission to construct, place or make the requested improvement, when:

(gg) the plans, specifications, drawings or other material submitted are, themselves, inadequate or incomplete, or show the proposed improvement to be in violation of these Declarations, the plat restrictions or any rules, regulations or guidelines adopted by tile Committee:

(hh) the design or color scheme of a proposed improvement or the materials proposed to be used are not in harmony with the general surroundings of the Lot or with adjacent buildings or structures in the sole opinion of the Committee; or

(ii) the proposed improvement, or any part thereof, would, in the sole opinion of the Committee, be contrary to the interest, welfare or rights of all or part of other Owners.

Section 4. Duties of Committee. The Committee shall approve or disapprove proposed improvements within fourteen (14) calendar days after all required information shall have been submitted to it. One copy of submitted material shall be retained by the Committee for its permanent files. All notifications to applicants shall be in writing, and in the event that such notification is one of disapproval, it shall specify the reason or reasons therefor. In the event that the Committee fails to approve or disapprove such plans or to request additional information reasonably required within 45 days after submission of all required or requested information, the plans shall be deemed approved.

Section 5. No Waiver of Future Approvals. The approval of the Committee of any proposals or plans and specifications or drawings for any work done or proposed, or in connection with any other matter requiring the approval and consent of such Committee, shall not be deemed to constitute a waiver of any right to withhold approval or consent as to any similar proposals, plans and specifications, drawings, or matters whatever subsequently or additionally submitted for approval or consent.

Section 6. Variance. The Committee may authorize variances from compliance with any of its guidelines and procedures when circumstances such as topography, natural obstructions, hardship, or aesthetic or environmental considerations require, but only in accordance with duly adopted rules and applicable zoning laws, ordinances and regulations. Such

variances may only be granted, however, when unique circumstances dictate and no variance shall (a) be effective unless in writing, (b) be contrary to the restrictions set forth in the body of this Declaration, or (c) estop the Committee from denying a variance in other circumstances. For purposes of this Section, the inability to obtain approval of any governmental agency, the issuance of any permit, the terms of any financing, or the initiation of work without the required approval of the Committee shall not be considered hardships warranting a variance.

Section 7. Compliance with Guidelines. Any contractor, subcontractor, agent, employee, or other invitee of an Owner who fails to comply with the terms and provisions of the guidelines and procedures promulgated by the Committee may be excluded by the Board from the Properties without liability to any person, subject to the notice and hearing procedures contained in the Bylaws. Further, if any approval required by this Declaration is not granted in writing with respect to any item prior to its installation, the respective Owner thereof shall remove promptly the unapproved item or structure, upon request by Declarant or the Association.

Section 8. Non-Liability of Declarant, Committee. Neither the Declarant nor the Committee shall be responsible in any way for any defect in any plans, specifications or other materials submitted to it, nor for any defects in any work done according thereto. Further, the Committee or the Declarant does not make, and shall not be deemed by virtue of any action of approval or disapproval taken by it to have made, any representation or warranty as to the suitability or advisability of the design, the engineering, the method of construction involved, or the materials to be used or as to the compliance of any plans submitted for approval with these Restrictions, any recorded plat governing the Real Estate or any applicable code, regulation or law.

Section 9. Inspection. The Committee and the Declarant may inspect work being performed to assure compliance with these Restrictions, the plat restrictions and applicable regulations. However, neither the Committee, nor any member thereof, nor the Declarant, nor any agent or contractor employed or engaged by the Committee or the Declarant, shall be liable or responsible for defects, nonconformity or deficiencies in any work inspected or approved by it or them, or on its or their behalf. Further, no such inspection or approval given by or on behalf of the Committee or the Declarant shall be taken or deemed to be or constitute a warranty or guaranty of the work so inspected or approved.

Section 10. No Compensation. Neither the Committee nor any of its members shall be entitled to any compensation for performing its duties or obligations set forth in this Declaration.

Section 11. Rules Governing Building on Several Contiguous Lots Having One Owner. Whenever two or more contiguous Lots shall be owned by the same Person, and such Owner shall desire to use two or more of said Lots as a site for a single Dwelling Unit, he shall apply in writing to the Committee for permission to so use said Lots. If permission for such a use shall be granted, the Lots constituting the site for such single Dwelling Unit shall be treated as a single Lot for the purpose of applying these Restrictions to said Lots, so long as, and only so long as, the Lots remain improved with one single Dwelling Unit; provided, however, that any dues, fees or other charges shall be assessed against each Lot individually.

ARTICLE XII
USE RESTRICTIONS

The following covenants and restrictions concerning the use and enjoyment of the Lots, Dwelling Units, Common Areas and Common Maintenance Areas (Article I, Section 1(i) and 1(k)) are in addition to any other covenants or restrictions contained herein and in the Final Plat of Homesteads at Hillview. All such covenants and restrictions are for the mutual benefit and protection of the present and future Owners and shall run with the land and inure to the benefit of and are enforceable by an Owner, or by the Association. Present or future Owners or the Association shall be entitled to injunctive relief against any violation or attempted violation of any such covenants and restrictions, and shall, in addition, be entitled to damages for any injuries or losses resulting from any violations thereof including reasonable attorney fees, but there shall be no right or reversion or forfeiture resulting from such violation.

Notwithstanding anything to the contrary contained herein or in the Articles or Bylaws, including, but not limited to, any covenants and restrictions set forth herein or otherwise, Declarant shall have the right to use and maintain any Lots and Dwelling Units owned by Declarant in and on the Real Estate and the Additional Property (other than individual Dwelling Units and Lots owned by persons other than Declarant), all of such number and size and at such locations as Declarant in its sole discretion may determine, as Declarant may deem advisable or necessary in its sole discretion to aid in the construction of Dwelling Units and the sale of Lots and Dwelling Units or for the conducting of any business or activity attendant thereto, including, but not limited to model Dwelling Units, storage areas, construction yards, signs, construction offices, sales offices, management offices and business offices. Declarant shall have the right to relocate any or all of the same from time to time as it desires. Declarant shall have the right to remove the same from the Real Estate and Additional Property at any time.

Section 1. Quiet Enjoyment. No portion of the Properties shall be used, in whole or in part, for the storage of any property or thing that will cause it to appear to be in an unclean or untidy condition or that will be obnoxious to the eye; nor shall any substance, thing, or material be kept upon any portion of the Properties that will emit foul or obnoxious odors or that will cause any noise or other condition that will or might disturb the peace, quiet, safety, comfort, or serenity of the occupants of surrounding property. No noxious, illegal, or offensive activity shall be carried on upon any portion of the Properties. For greater clarification, no Owner shall knowingly or willfully make or create any unnecessary, excessive or offensive noise or disturbance which destroys the peace, quiet and/or comfort of the Owners or allow any such noise or disturbance to be made on his or her Lot, including any noise by the use of musical instruments, radio, television, loud speakers, electrical equipment, amplifiers or other machines or equipment. There shall not be maintained any plants or animals or device or thing of any sort whose activities or existence is in any way obnoxious, dangerous, unsightly, unpleasant, or of a nature as may diminish or destroy the enjoyment of the Properties. No outside burning of wood, leaves, trash, garbage or household refuse shall be permitted within the Properties. Also, excessive grass clippings from the mowing of lawns or other lawn/tree rubbish will not be allowed to be left on any street within the development.

Section 2. Business Use or Trade. No garage sale, moving sale, rummage sale or similar activity and no trade or business may be conducted in or from any Lot, except that an

Owner or occupant of a Lot may conduct business activities within the Unit so long as: (a) the existence or operation of the business activity is not apparent or detectable by sight, sound or smell from outside the Unit; (b) the business activity conforms to all zoning requirements for the Properties; (c) the business activity does not involve persons coming onto the Properties who do not reside in the Properties or door-to-door solicitation of residents of the Properties; and (d) the business activity is consistent with the residential character of the Properties and does not constitute a nuisance, or a hazardous or offensive use, or threaten the security or safety of other residents of the Properties, as may be determined in the sole discretion of the Board.

The terms "business" and "trade", as used in this provision, shall be construed to have their ordinary, generally accepted meanings, and shall include, without limitation, any occupation, work or activity undertaken on an ongoing basis which involves the provision of goods or services to persons other than the provider's family and for which the provider receives a fee, compensation, or other form of consideration, regardless of whether: (i) such activity is engaged in full or part-time; (ii) such activity is intended to or does generate a profit; or (iii) a license is required therefor. Notwithstanding the above, the leasing of a Lot shall not be considered a trade or business within the meaning of this section. This section shall not apply to any activity conducted by the Declarant or a builder approved by the Declarant with respect to its development and sale of or use of any Lots which such entity owns within the Subdivision.

Section 3. Drilling. No oil or water drillings, oil development operations, oil refining, quarries or mining operations of any kind shall be permitted upon or in any Lot, nor shall oil wells, tanks, tunnels, mineral excavations or shafts be permitted upon or in any Lot. No derrick or other structure designed for use in boring for oil, water or natural gas shall be erected, maintained or permitted on any Lot.

Section 4. Occupancy and Residential Use of Partially Completed Residence Prohibited. No Residence constructed on any of the Lots shall be occupied or used for residential purposes or human habitation until it shall have been substantially completed. The determination of whether the Residence has been substantially completed shall be made by the Committee and such decision shall be binding on all parties.

ARTICLE XIII
ASSESSMENTS

Section 1. Annual Accounting. Annually, after the close of each fiscal year of the Association and prior to the date of the annual meeting of the Association next following the end of such fiscal year, the Board shall cause to be prepared and furnish the Owners with a financial statement of operations by the Association, which statement shall show all receipts and expenses received, incurred and paid during the preceding fiscal year.

Section 2. Proposed Annual Budget. Annually, on or before the date of the annual or special meeting of the Association at which the budget is to be acted upon, the Board of Directors shall cause to be prepared a proposed annual budget for the next ensuing fiscal year estimating the total amount of the Common Expenses for such next ensuing fiscal year and shall furnish a copy of such proposed budget to each Owner at or prior to the time the notice of such annual or special meeting is mailed or delivered to such Owners. The annual budget shall be submitted to the Owners at the annual or special meeting of the Association for adoption and, if so adopted, shall be the basis for the Regular Assessments (hereinafter defined) for the next ensuing fiscal year. At such annual or special meeting of the Owners, the budget may be approved in whole or in part or may be amended in whole or in part by a majority vote of the Owners attending such meeting (i.e. majority of a quorum as defined in the By-Laws); provided, however, that in no event shall such annual or special meeting of the Owners be adjourned until an annual budget is approved and adopted at such meeting, either the proposed annual budget or the proposed annual budget as amended. The annual budget, the Regular Assessments and all sums assessed by the Association shall be established by using generally accepted accounting principles applied on a consistent basis. The annual budget and the Regular Assessments shall, in addition, be established to include the establishment and maintenance of a replacement reserve fund for capital expenditures and replacement and repair of the Common Areas and Common Maintenance Areas, which replacement reserve fund shall be used for those purposes and not for usual and ordinary repair expenses of the Common Areas and Common Maintenance Areas. Such replacement reserve fund for capital expenditures and replacement repair of the Common Areass shall be maintained by the Association in a separate interest bearing account or accounts with one or more banks: or savings and loan associations authorized to conduct business in Johnson County or Marion County, Indiana selected from time to time by the Board. The failure or delay of the Board of Directors to prepare a proposed annual budget and to furnish a copy thereof to the Owners shall not constitute a waiver or release in any manner of the obligations of the Owners to pay the Common Expenses as herein provided, whenever determined. Whenever, whether before or after the annual or special meeting of the Association at which the budget is to be acted upon, there is no annual budget approved by the Owners as herein provided for the current fiscal year, the Owners shall continue to pay Regular Assessments based upon the last approved budget or, at the option of the Board, based upon one hundred and ten percent (10 %) of such last approved budget, as a temporary budget.

Section 3. Regular Assessments. The annual budget as adopted by the Owners shall, based on the estimated cash requirement for the Common Expenses in the fiscal year covered thereby as set forth in said budget, contain a proposed assessment against each Lot, which shall be the same amount for each Lot, provided, immediately following the adoption of the annual budget, each Owner shall be given written notice of the assessment against his respective Lot (herein called the "Regular Assessment"). In the event the Regular Assessment for a particular fiscal year is initially based upon a temporary budget, each Regular Assessment shall be revised, within fifteen (15) days following adoption of the final annual budget by the Owners, to reflect the assessment against each Lot based upon such annual budget as finally adopted by the Owners. The aggregate amount of the Regular Assessments shall be equal to the total amount of expenses provided and included in the final annual budget, including reserve funds as hereinabove provided. The Regular Assessment against each Lot shall be paid, in full in advance by a date specified by the Board which date shall not be earlier than fifteen (15) days after the

written notice of such Regular Assessment is given to the Owners. However, at the option of the Board, the Regular Assessment against each Lot may be paid in advance in equal quarterly installments commencing on the first day of the first month of each fiscal year and quarterly thereafter through and including the first day of the last quarter of such fiscal year. Payment of the Regular Assessment, whether in one payment or in quarterly installments, shall be made to the Board of Directors or the Managing Agent, as directed by the Board of Directors.

In the event the Regular Assessment for a particular fiscal year of the Association was initially based upon a temporary budget,

(jj) if the Regular Assessment based upon the final annual budget adopted by the Owners exceeds the amount of the Regular Assessment based upon the temporary budget, that portion of such excess applicable to the period from the first day of the current fiscal year to the date of the next payment of the Regular Assessment which is due shall be paid with such next payment and such next payment, and all payments thereafter during such fiscal year, whether annual or quarterly, shall be increased so that the Regular Assessment as finally determined shall be paid in full by the remaining payments due in such fiscal year, or

(kk) if the Regular Assessment based upon the temporary budget exceeds the Regular Assessment based upon the final annual budget adopted by the Owners, such excess shall be credited against the next payment or payments of the Regular Assessment coming due, whether annual or quarterly, until the entire amount of such excess has been so credited: provided, however, that if an Owner had paid his Regular Assessment in full in advance, then the adjustments set forth under (a) above or (b) shall be made by a cash payment by, or refund to, the Owner or the first day of the second month following the determination of the Regular Assessment based upon the annual budget finally adopted by the Owners. The Regular Assessment for each fiscal year of the Association shall become a lien on each separate Lot as of the first day of each fiscal year of the Association, even though the final determination of the amount of such Regular Assessment may not have been made by that date. The fact that an Owner has paid his Regular Assessment for the current fiscal year in whole or in part based upon a temporary budget and thereafter, before the annual budget and Regular Assessment are finally determined, approved and adjusted as herein provided, sells, conveys or transfer his Lot or any interest therein, shall not relieve or release such Owner or his successor as Owner of such Lot from payment of the Regular Assessment for the Lot as finally determined, and such Owner and his successor as Owner of such Lot shall be jointly and severally liable for the Regular Assessment as finally determined. Any statement of unpaid assessments furnished by the Association pursuant to Section 2 of Article X hereof prior to the final determination and adoption of the annual budget and Regular Assessment for the year with respect to which such statement is made shall state that the matters set forth therein are subject to adjustment upon determination and adoption of the final budget and Regular Assessment for such year, and all parties to whom any such statement may be delivered or who may rely thereon shall be bound by such final determinations. Annual or quarterly (if so determined by the Board) installments of Regular Assessments shall be due and payable automatically on their respective due dates without any notice from the Board or the Association, and neither the Board nor the Association shall be responsible for providing any notice or statements to Owners for the same. The initial Regular Assessment is $900 per year (based on and proratable at $75 per month).

(ll) Notwithstanding anything to the contrary above concerning Declarant not being obligated for Regular Assessment, the Declarant after the Applicable Date will contribute twenty-five percent (25%) of the Regular Assessment for unimproved Lots in Declarant's name, but only if the Applicable Date is not earlier than when Declarant has conveyed eighty percent (80%) of the Lots on Exhibit B to others or ten (10) years after the date this Declaration has been recorded, whichever first occurs.

Section 4. Special Assessments. From time to time Common Expenses of an unusual or extraordinary nature or not otherwise anticipated may arise. At such time and without the approval of the Owners, unless otherwise provided in this Declaration, the Articles, the Bylaws or the Act, the Board of Directors shall have the full right, power and authority to make special assessments which, upon resolution of the Board, shall become a lien on each Lot, but not on Lots owned by Declarant, prorated in equal shares (herein called "Special Assessment"). Without limiting the generality of the foregoing provisions, Special Assessments may be made by the Board of Directors from time to time to pay for capital expenditures and to pay for the cost of any repair or reconstruction of damage caused by fire or other casualty or disaster to the extent insurance proceeds are insufficient therefor under the circumstances described in this Declaration. THE DECLARANT SHALL ONLY BE RESPONSIBLE FOR SPECIAL ASSESSMENTS AFTER THE "APPLICABLE DATE" OCCASIONED BY EXTRAORDINARY REPAIRS TO ORIGINALLY INSTALLED INFRASTRUCTURE, BUT SHALL NOT BE RESPONSIBLE FOR NEW INFRASTRUCTURE OR AMENITIES DESIRED BY OTHER OWNERS UNLESS DECLARANT SPECIFICALLY AGREES OTHERWISE IN WRITING.

Section 5. Failure of Owner to Pay Assessments.

(mm) No Owner may exempt himself from paying Regular Assessments and Special Assessments, or from contributing toward the expenses of administration and of maintenance and repair of the Common Areas and Common Maintenance Areas for purposes of maintenance, and toward any other expense lawfully agreed upon, by waiver of the use or enjoyment of the Common Areas or by abandonment of the Lot belonging to him. Each Owner shall be personally liable for the payment of all Regular and Special Assessments against his Lot. Where the Owner constitutes or consists of more than one Person, the liability of such Persons shall be joint and several. Regular and special assessments should constitute a lien against the Lots and Dwelling Units thereon. If any Owner shall fail, refuse or neglect to make any payment of any Regular Assessments or Special Assessments against his Lot when due, the lien for such Assessment on the Owner's Lot and Dwelling Unit may be filed and foreclosed by the Board for and on behalf of the Association as a mechanic's lien on real property or as otherwise provided or permitted by law. Upon the failure of an Owner to make timely payments of any such Regular Assessments or Special Assessments, when due, the Board may, in its discretion, accelerate the entire balance of the unpaid Assessments and declare the same immediately due and payable, notwithstanding any other provisions hereof to the contrary. The Board may, at its option, bring a suit to recover a money judgment for any unpaid Regular Assessment or Special Assessment without foreclosing (and without thereby waiving) the lien securing the same. In any action to recover a Regular Assessment or Special Assessment, or any other charges due the Association, whether by foreclosure or otherwise, the Board, for and on behalf of the Association, shall be entitled to

recover from the Owner of the respective Lot and Dwelling Unit all of the costs and expenses of such action incurred (including but not limited to reasonable attorneys' fees) and interest from the date such Assessments or charges were due, until paid, at a rate equal to the "prime interest rate" then in effect as publicly announced or published by Heartland Bank or its successors (or if said Bank is no longer in existence, then such rate charged by another national bank in Johnson or Marion County, Indiana selected by the Board) plus 4% but in no event more than the maximum rate allowable under applicable usury laws.

(nn) Notwithstanding anything contained in this Section or elsewhere in this Declaration, the Articles or the Bylaws, any sale or transfer of a Lot and Dwelling Unit to a Mortgagee pursuant to a foreclosure on its mortgage or conveyance in lieu thereof, or a conveyance to any person at a public sale in the manner provided by law with respect to mortgage foreclosures, shall extinguish the lien of any unpaid installment of any Regular Assessment or Special Assessment or other changes as to such installments which became due prior to such sale, transfer or conveyance; provided, however, that the extinguishment of such lien shall not relieve the prior Owner from personal liability therefor. No such sale, transfer or conveyance shall relieve the Lot and Dwelling Unit or the purchaser at such foreclosure sale, or grantee in the event of conveyance in lieu thereof, from liability for any installments of Regular Assessments or Special Assessments or other charges thereafter becoming due or from the lien therefor. Such unpaid share of any Regular Assessments or Special Assessments or other charges, the lien for which has been divested as aforesaid, shall, if not collected from the party personally liable therefore, be deemed to be a Common Expense, collectible from all Owners (including the party acquiring the subject Lot and Dwelling Unit from which it arose).

(oo) In addition to the remedies above stated for failure to pay assessments, the Association may disqualify a delinquent Owner from his right to vote and to hold office or committee membership in the Association while Assessment are delinquent in addition to charging a late fee of $25.00 per day of delinquency to among other things, cover the administrative expense of addressing the delinquency.

Section 6. Initial Budgets and Assessments. Notwithstanding anything to the contrary contained herein, in the Articles, in the Bylaws, in the Act or otherwise, until the Applicable Date the annual budget and all Regular Assessments and Special Assessments shall be established by the Initial Board without meetings of or concurrence of the Owners. The agency, power of attorney and proxy granted to the Declarant by each Owner pursuant to Section 2 of Article V hereof shall be deemed to cover and include each Owner's right to vote on and approve the annual budget and any Regular Assessments and Special Assessments until the Applicable Date.

Further, until the Applicable Date and notwithstanding the foregoing or anything else contained herein, no Regular Assessments, Special Assessments or other charges shall be owed or payable by Declarant with respect to any Lot or other portion of the Real Estate owned by Declarant while the same is owned by Declarant, nor shall any such Assessments or Charges become a lien on any such Lot or other portion of the Real Estate owned by Declarant, nor shall any such Assessments or charges become a lien on any such Lot or other portion of the Real Estate owned by Declarant, except as specifically detailed in the last paragraph of subsection 3 herein. Assessments against a Lot shall commence to accrue from the date each Lot is conveyed

by Declarant to another Person, and a prorated portion of the Regular Assessment for the balance of the fiscal year of the Association against each Lot so conveyed by Declarant shall be paid by each purchaser upon such conveyance.

Section 7. Initial Working Capital and Start-Up Fund. Upon the closing of the initial conveyance of each Lot by Declarant to another Person, the purchaser of such Lot shall pay to the Association, in addition to any other amount then owed or due to the Association, as a contribution to its working, capital and start-up fund, an amount equal to one-sixth (1/6th) of the then current annual Regular Assessment against such Lot, which payment shall be nonrefundable and shall not be considered as an advance payment of any Assessment or other charge owed the Association with respect to such Lot. Such working capital and start-up fund shall be held and used by the Association for payment of, or reimbursement to Declarant for advances made to pay expenses of the Association for its early period of operation of the Real Estate, to enable the Association to have cash available to meet unforeseen expenditures, or to acquire additional equipment or services deemed necessary by the Board.

ARTICLE XIV
MORTGAGES

Section 1. Notice to Association. Any Owner who places a first mortgage lien upon his Lot, or the Mortgagee, may notify the Secretary of the Association thereof and provide the name and address of the Mortgagee. A record of each such first mortgage, and name and address of the Mortgagee, shall be maintained by the Secretary and any notice required to be given to the Mortgagee pursuant to the terms of this Declaration, the Bylaws or otherwise shall be deemed effectively given if mailed to such Mortgagee at the address shown in such record or in the time provided. Unless notification of any such mortgage and the name and address of Mortgagee are furnished to the Secretary, either by the Owner or the Mortgagee, no notice to any Mortgagee as may be otherwise required by this Declaration, the Bylaws or otherwise shall be required and no Mortgagee shall be entitled to vote on any matter to which he otherwise may be entitled by virtue of this Declaration, the Bylaws, a proxy granted to such Mortgage in connection with the mortgage, or otherwise.

The Association shall, upon written request of a Mortgagee who has furnished the Association with its name and address as hereinabove provided, furnish such Mortgagee with written notice of any default in the performance by its borrower of any obligations of such borrower under this Declaration or the Bylaws which is not cured within sixty (60) days.

Section 2. Notice of Unpaid Assessments. The Association shall, upon request of a Mortgagee, a proposed mortgagee, or a proposed purchaser who has a contractual right to purchase a Lot, furnish to such Mortgagee or purchaser a statement setting forth the amount of the unpaid Regular Assessments or Special Assessments or other charges against the Lot, which statement shall be binding upon the Association and the Owners, and any Mortgagee or grantee of the Lot shall not be liable for nor shall the Lot conveyed be subject to a lien for any unpaid assessments or charges in excess of the amounts set forth in such statement except as such assessments may be adjusted upon adoption of the final annual budget, as referred to in Section 3 of Article IV hereof.

ARTICLE XV
INSURANCE

Preface

NOTWITHSTANDING ANYTHING TO THE CONTRARY IN THIS ARTICLE (INSURANCE), THE ASSOCIATION WILL SEEK TO OBTAIN THE COVERAGES INDICATED SUBJECT HOWEVER TO THE LIMITATION OF WHAT'S AVAILABLE FROM INSURANCE CARRIERS FOR HOMESTEADS AT HILLVIEW COUPLED WITH CONSIDERATION AS TO EXCEPTIONS AND EXCLUSIONS OF COVERAGE, AND DEDUCTABLES TO MAINTAIN CONTROL OF THIS ITEM OF COMMON EXPENSE.

THE ASSOCIATION WELCOMES THE OWNERS' INPUT REGARDING THE BEST COVERAGE FOR THE BEST PRICE AND WILL SUPPLY OWNERS WITH A SUMMARY FROM THE ASSOCIATION'S INSURANCE PROFESSIONAL WHICH WE URGE OWNERS TO SHARE AND CHALLENGE THEIR OWN INSURANCE PROFESSIONAL FOR RECOMMENDATIONS AS TO THEIR REQUIRED INSURANCE AND ANY ADVISABLE ADDITIONAL COVERAGE (GAP OR OTHERWISE) FOR DIRECT PURCHASE BY OWNERS.

Section 1. Casualty Insurance. The Association shall purchase a master casualty insurance policy affording fire and extended coverage insurance insuring only the Common Areas in the Homesteads at Hillview Subdivision Ponds and the Common Maintenance Areas in an amount consonant with the full replacement value of the improvements, if any, which, in whole or in part, comprise said Common Areas and Common Maintenance Areas. If the Board of Directors can obtain such coverage for reasonable amounts they shall also obtain "all risk" coverage. The Board of Directors shall be responsible for reviewing at least annually the amount and type of such insurance and shall purchase such additional insurance as is necessary to provide the insurance required above. If deemed advisable by the Board, the Board may cause such full replacement value to be determined by a qualified appraiser. The cost of any such appraisal shall be a Common Expense. Such insurance coverage shall name the Association as the insured, for the benefit of each Owner (to the extent, if any, that individual Owners have an independent interest in the property covered thereby).

All proceeds payable as a result of casualty losses sustained which are covered by insurance purchased by the Association as hereinabove set forth shall be paid to it or to the Board of Directors. In the event that the Board of Directors has not posted surety bonds for the faithful performance of their duties as such Directors or if such bonds do not exceed the funds which will come into its hands, and there is damage to a part or all of the Common Areas or Common Maintenance Areas resulting in a loss, the Board of Directors shall obtain and post a bond for the faithful performance of its duties in an amount to be determined by the Board, but not less than 150% of the loss, before the Board shall be entitled to receive the proceeds of the insurance payable as a result of such loss. The sole duty on the Board in connection with any such insurance proceeds shall be to receive such proceeds as are paid and to hold the same for

the purposes elsewhere stated herein, and for the benefit of the Owners. The proceeds shall be used or distributed by the Association or the Board, as appropriate, only in accordance with the provisions of this Declaration.

Such master casualty insurance policy, and "all risk" coverage if obtained, shall (to the extent the same are obtainable) contain provisions that the insurer (a) waives its right to subrogation as to any claim against the Association, the Board of Directors, its agents and employees. Owners, their respective agents and guests, and (b) waives any defense based on the invalidity arising from the acts of the insured, and providing further, if the Board of Directors is able to obtain such insurance upon reasonable terms (i) that the insurer shall not be entitled to contribution against casualty insurance which may be purchased by individual Owners, and (ii) that notwithstanding any provision thereof giving the insurer an election to restore damage in lieu of a cash settlement, such option shall not be exercisable in the event the Association does not elect to restore.

Section 2. Public Liability Insurance. The Association shall also purchase a master comprehensive public liability insurance policy in such amount or amounts as the Board of Directors shall deem appropriate from time to time, but in any event with a minimum combined limit of $1,000,000.00 per occurrence. Such comprehensive public liability insurance policy shall cover the Common Areas and Common Maintenance Areas and shall insure the Association, the Board of Directors, Officers, any committee or organ of the Association or Board, any Managing Agent appointed or employed by the Association, the Declarant and all persons acting or who may come to act as agents or employees of any of the foregoing with respect to the Real Estate, all Owners of Lots and all other persons entitled to occupy any Lot or Dwelling Unit. Such public liability insurance policy shall contain a "severability of interest" clause or endorsement which shall preclude the insurer from denying the claim of an Owner because of negligent acts of the Association or other Owners.

Section 3. Other Insurance. The Association shall also obtain any other insurance required by law to be maintained, including but not limited to workmen's compensation and occupational disease insurance, and such other insurance as the Board of Directors may from time to time deem necessary, advisable or appropriate, including but not limited to, liability insurance on vehicles owned or leased by the Association and officers' and directors' liability policies. Such insurance coverage shall also provide for and cover cross liability claims of one insured party against another insured party. Such insurance shall inure to the benefit of each Owner, the Association, the Board of Directors and any Managing Agent acting on behalf of the Association. Each Owner shall be deemed to have delegated to the Board of Directors his right to adjust with the insurance companies all losses under the policies purchased by the Board of Directors the proceeds of which are payable to the Board or the Association.

Section 4. General Provisions. The premiums for all insurance hereinabove described shall be paid by the Association as part of the Common Expenses. Upon request of any Owner or Mortgagee whose interest may be affected thereby, the Association shall provide such Owner or mortgagee with a description of the insurance coverage maintained by the Association.

In no event shall any distribution of insurance proceeds be made by the Board of Directors directly to an Owner where there is a mortgagee endorsement on the certificate of insurance or insurance policy as it applies to such Owner's share of such proceeds. In such event any remittances shall be to the Owner and his Mortgagee jointly. The same method of distribution shall also apply to the distribution of any condemnation awards in connection with any taking of the Common Areas or the Association's interest in Common Maintenance Areas. Notwithstanding the foregoing, under no circumstances shall any distribution of insurance proceeds or condemnation awards be made by the Association to any Owners or Mortgagees if to do so would be in violation of the Act or if the same would constitute a distribution of earnings, profits or pecuniary gain to the Members of the Association; in any such event, any such insurance proceeds or condemnation awards shall be retained by the Association for use in the payment of its expenses of operation.

Section 5. Insurance Impact. Nothing shall be done or kept by an Owner in any Residence, or on any Lot, which will cause an increase to the Association in the rate of its insurance. No Owner shall permit anything to be done or kept in his Residence or on his Lot which will result in a cancellation of insurance to the Association, or which would be in violation of any law or ordinance or the requirements of any insurance underwriting or rating bureau.

Section 6. Insurance by Owners. Each Owner shall be solely responsible for and may obtain such additional insurance as he deems necessary or desirable, at his own expense, affording coverage upon his personal property, his Lot, his Dwelling Unit, the contents of his Dwelling Unit, his personal property stored anywhere on the Real Estate, and for his personal liability, but all such insurance shall contain the same provisions for waiver of subrogation as referred to in the foregoing provisions for the master casualty insurance policy to be obtained by the Association.

ARTICLE XVI
CASUALTY AND RESTORATION

In the event of damage to or destruction of any of the Common Areas and/or the Common Maintenance Areas due to fire or any other casualty or disaster, the Association shall promptly cause the same to be repaired and reconstructed. The proceeds of insurance carried by the Association, if any, shall be applied to the cost of such repair and reconstruction.

If the insurance proceeds, if any, received by the Association as a result of any such fire or any other casualty or disaster are not adequate to cover the cost of repair and reconstruction of the Common Areas and/or the Common Maintenance Areas, or in the event there are no insurance proceeds, the cost for restoring the damage and repairing and reconstructing the Common Areas and/or the Common Maintenance Areas so damaged or destroyed (or the costs thereof in excess of insurance proceeds received, if any) shall be assessed by the Association against all of the Owners in equal shares. Any such amounts assessed against the Owners shall be assessed as part of the Common Expenses and shall constitute a lien from the time of assessment as provided herein.

For purposes of this Article, repair, reconstruction and restoration shall mean construction or rebuilding the Common Areas and/or the Common Maintenance Areas to as near as possible the same condition as they existed immediately prior to the damage or destruction and with the same architecture and materials.

Immediately after a fire or other casualty or disaster causing damage to any property for which the Board of Directors or Association has the responsibility of maintenance and repair hereunder, the Board shall obtain reliable and detailed estimates of the cost to replace the damaged property in a condition as good as that before the casualty. Such costs may include professional fees and premiums for such bonds as the Board of Directors desires or deems necessary.

Encroachments upon any Lot which may be created as a result of such reconstruction or repair of any of the Common Areas and/or the Common Maintenance Areas shall not constitute a claim or basis of a proceeding or action by the Owner upon whose Lot such encroachment exists, provided that such reconstruction was either substantially in accordance with the plans and specifications or as the Common Areas and/or the Common Maintenance Areas were originally constructed.

ARTICLE XVII
AMENDMENT OF DECLARATION

Section 1. Generally. Except as otherwise provided in this Declaration, amendments to this Declaration shall be proposed and adopted in the following manner:

(pp) **Notice**. Notice of the subject matter of any proposed amendment shall be included in the notice of the meeting at which the proposed amendment is to be considered.

(qq) **Resolution.** A resolution to adopt a proposed amendment may be proposed by the Board of Directors or Owners having in the aggregate at least a majority of the votes of all Owners.

(rr) **Meeting**. The resolution concerning a proposed amendment must be adopted by the designated vote at a meeting duly called and held in accordance with the provisions of the Bylaws.

(ss) **Adoption.** Any proposed amendment to this Declaration must be approved by a vote of not less than seventy percent (70%) in the aggregate of the votes of all Owners. In the event any Lot or Dwelling Unit is subject to a first mortgage, the Mortgage shall be notified of the meeting and the proposed amendment in the same manner as an Owner if the Mortgagee has given prior notice of its mortgage interest to the Board of Directors in accordance with the provisions hereof.

(tt) **Special Amendments.** No amendment to this Declaration shall be adopted which changes (1) the applicable share of an Owner's liability for the Common Expenses, or the method

of determining the same, or (2) the provisions of Article XIII of this Declaration with respect to casualty insurance to be maintained by the Association, or (3) the provisions of Article XIV of this Declaration with respect to reconstruction or repair of the Common Areas and/or the Common Maintenance Areas in the event of fire or any other casualty or disaster, or (4) the provisions of this Declaration establishing the Committee and providing for its functions, without, in each or any of such circumstances, the unanimous approval of all Owners and of all Mortgagees whose mortgage interests have been made known to the Board of Directors in accordance with the provisions of the Declaration.

(uu) **Recording.** Each amendment to the Declaration shall be executed by the President and Secretary of the Association and shall be recorded in the office of the Recorder of Johnson County, Indiana, and such amendment shall not become effective until so recorded.

Section 2. Amendments by Declarant Only. Notwithstanding the foregoing or anything else contained herein, the Declarant shall have and hereby reserves the right and power acting alone and without the consent or approval of the Owners, the Association, the Board of Directors, any Mortgagees or any other Person to amend or supplement this Declaration at any time and from time to time if Declarant records the modification in the Office of the Recorder of Johnson County, Indiana, and if such amendment or supplement is made (a) to comply with requirements of the Federal National Mortgage Association, the Government National Mortgage Association, the Federal Home Loan Mortgage Association, the Department of Housing and Urban Development, the Veterans Administration, or any other governmental agency or any other public, quasi-public or private entity which performs (or may in the future perform) functions similar to those currently performed by such entities, (b) to induce any of such agencies or entities to make, purchase, sell, insure or guarantee first mortgages covering Lots and Dwelling Units, (c) to bring this Declaration into compliance with any governmental requirements, (d) to comply with or satisfy the requirements of any insurance underwriters, insurance rating bureaus or organizations which perform (or may in the future Perform) function similar to those performed by such agencies or entities, to subject additional property to these restrictions, (f) to correct clerical or typographical errors in this Declaration or any Exhibit hereto or any supplement or amendment thereto, (g) to clarify, further define or limit any easement, or otherwise exercise any rights reserved herein, or (h) change the substance of one or more covenants, conditions, terms or provisions hereof but (A) does not materially increase the obligation(s) of any owner under any covenant, condition, term or provision without such owner's consent or (B) is necessary to comply with a bona fide governmental requirement, including applicable laws, ordinances, regulations or orders of any municipality or court having jurisdiction. In furtherance of the foregoing, a power coupled with an interest is hereby reserved by (and granted by each Owner to) the Declarant to vote in favor of, make, or consent to any amendments described in this Section 2 or behalf of each Owner as proxy or attorney-in-fact, as the case may be. Each deed, mortgage, trust deed, other evidence of obligation, or other instrument affecting a Lot or Dwelling Unit and the acceptance thereof shall be deemed to be a grant and acknowledgment of, and a consent to the reservation of, the power to the Declarant to vote in favor of, make, execute and record any such amendments. The right of the Declarant to act pursuant to rights reserved or granted under this Section 2 shall terminate at such time as the Declarant no longer holds or controls title to any part or portion of the Real Estate.

ARTICLE XVIII
ACCEPTANCE AND RATIFICATION

All present and future Owners, Mortgagees, tenants and occupants of the Lots and Dwelling Units, and other Persons claiming by, through or under them, shall be subject to and shall comply with the provisions of this Declaration, the Articles, the Bylaws and the rules, regulations and guidelines as adopted by the Board of Directors and (to the extent of its jurisdiction) the Committee, as each may be amended or supplemented from time to time. The acceptance of a deed of conveyance of the act of occupancy of any Lot or Dwelling Unit shall constitute an agreement that the provisions of this Declaration, the Articles, the Bylaws and rules, regulations and guidelines, as each may be amended, or supplemented from time to time, are accepted and ratified by such Owner, tenant or occupant, and all such provisions shall be covenants running with the land and shall bind any Person having at any time any interest or estate in an Lot or Dwelling Unit or the Real Estate, all as though such provisions were recited and stipulated at length in each and every deed, conveyance, mortgage or lease thereof. All Persons who may own, occupy, use, enjoy or control a Lot or Dwelling Unit or any part of the Real Estate in any manner shall be subject to this Declaration, the Articles, the Bylaws, and the rules, regulations and guidelines applicable thereto as each may be amended or supplemented from time to time.

ARTICLE IXX
NEGLIGENCE

Each Owner shall be liable for the expense of any maintenance, repair or replacement rendered necessary by his negligence or by that of any member of his family his or their guests, employees, agents, invitees or lessees, to the extent that such expense is not covered by the proceeds of insurance carried by the Association. An Owner shall pay the amount of any increase in insurance premiums occasioned by his violation of any of the Restrictions or any violation thereof by any member of his family or his or their guests, employees, agents, invitees or tenants.

ARTICLE XX
BENEFIT AND ENFORCEMENT

Section 1. Covenants Appurtenant to Land. These covenants are to run with the land, and shall be binding on all parties and all persons claiming under them for a period of twenty-five (25) years from the date these covenants are recorded, at which time said covenants shall be automatically extended for successive periods of ten (10) years each, unless at any time after fifteen (15) years a majority of the then owners of the lots in this subdivision agree to change (or terminate) said covenants in whole or in part and on the condition that an instrument to that effect signed by the lot owners voting in favor of such change has been recorded; provided, however, that no change or termination of said covenants shall affect any easement hereby created or granted unless all persons entitled to the beneficial use of such easement shall consent thereto.

Section 2. Prosecution of Violations. It shall be lawful for the Association, the Committee (as to matters for which it has responsibility) or any other person owning any real property situated in this subdivision to prosecute any proceedings at law or in equity against the person or persons violating, or attempting to violate any covenant, conditions, provisions or restrictions contained herein either to prevent such person or persons from doing so, or to recover damages or other dues for such violation, or to require the removal of structures erected in violation hereof. All costs of litigation and attorneys' fees resulting from violation of these covenants and restrictions shall be the financial responsibility of the Lot Owner or Owners found to be in violation. Invalidation of any one of these covenants by judgment or court order shall in no way affect any of the other provisions which shall remain in full force and effect. Failure to enforce any specific requirement of the covenant shall not be considered as a waiver of the right to enforce any covenant herein, thereafter. Notwithstanding the foregoing, any violation of these covenants or the Declaration may be waived by a majority of the then owners of the Lots in this subdivision.

The Association may as respects an Owner who violates these restrictions, after written notice to the Owner detailing the nature of the violation with a time period established by the Association to cure or conform, disqualify the voting rights and right to hold office while the violation continues and may further in the Board's sole discretion, impose a fine, in whole or in part, with each day after the cure period being a separate violation at a chargeable rate of up to one hundred dollars ($100.00) per violation per day. This fine, if not paid when required, will be processed in the same manner as assessments.

ARTICLE XXI
NON-LIABILITY OF CITY OF FRANKLIN DRAINAGE BOARD

The City of Franklin Drainage Board shall not be responsible in any way for, and disclaims any liability for, any defect in any plans, specifications or other materials approved by it in connection with the storm drainage system for the Homesteads at Hillview Project, or for any defects in the construction thereof.

ARTICLE XXII
MISCELLANEOUS

Section 1. Costs and Attorneys' Fees. In any proceeding arising because of failure of an Owner to make any payments required by this Declaration, the Articles or the Bylaws, or to comply with any provision of this Declaration, the Articles, the Bylaws, or the rules, regulations and guidelines adopted pursuant thereto, as each may be amended from time to time, the Association shall be entitled to recover its costs and reasonable attorneys' fees incurred in connection with such default or failure.

Section 2. Waiver. No Owner may exempt himself from liability for his contribution toward the Common Expenses by waiver of the use of enjoyment of any of the Common Areass or by abandonment of his Lot or Dwelling Unit.

Section 3. Severability Clause. The invalidity of any covenant, restriction, condition, limitation or other provision of this Declaration, the Articles or the Bylaws shall not impair or affect in any manner the validity, enforceability or effect of the rest of this Declaration, the Articles or the Bylaws and each shall be enforceable to the greatest extent permitted by law.

Section 4. Pronouns. Any reference to the masculine, feminine or neuter gender herein shall, unless the context clearly requires the contrary, be deemed to refer to and include all genders. Words in the singular shall include and refer to the plural, and vice versa, as appropriate.

Section 5. Interpretation. The captions and titles of the various articles, sections, sub-sections, paragraphs and subparagraphs of this Declaration are inserted herein for ease and convenience of reference only and shall not be used as an aid in interpreting or construing this Declaration or any provision hereof.

IN WITNESS WHEREOF, Homesteads at Hillview, LLC, by its duly authorized Manager, Declarant herein, has executed this Declaration on the day and year first hereinabove set forth.

Homesteads at Hillview, LLC

By:_____
John E. Grimmer Sr, Member

STATE OF INDIANA)
) SS:
COUNTY OF JOHNSON)

Before me, a Notary Public in and for said County and State, personally appeared John E. Grimmer Sr, Member of Homesteads at Hillview, LLC, who acknowledged the execution of the above and foregoing instrument for and on behalf of said limited liability company, and, who having been duly sworn, stated that any representations contained therein are true.

WITNESS my hand and Notarial Seal this _____ day of _____, 201__.

My Commission Expires:

_____

_____
Notary Public
Printed_____
Resident of _____ County

This instrument was prepared by:

Michael J. Duke
4300 N 725 W
Bargersville, IN 46106

EXHIBIT SUMMARY
FOR THE HOMESTEADS AT HILLVIEW COMMUNITY

Exhibit A - Legal Description

Exhibit B - Conceptual Site Plan

Exhibit C - Covenants and Restrictions

Exhibit D – Rules and Regulations

HOMESTEADS AT HILLVIEW
COVENANTS AND RESTRICTIONS

607946_2

February, 2014

- **EXHIBIT I**– DELETED

- **EXHIBIT J**– Preliminary Phasing Plan

PHASING EXHIBIT
HOMESTEADS AT HILLVIEW

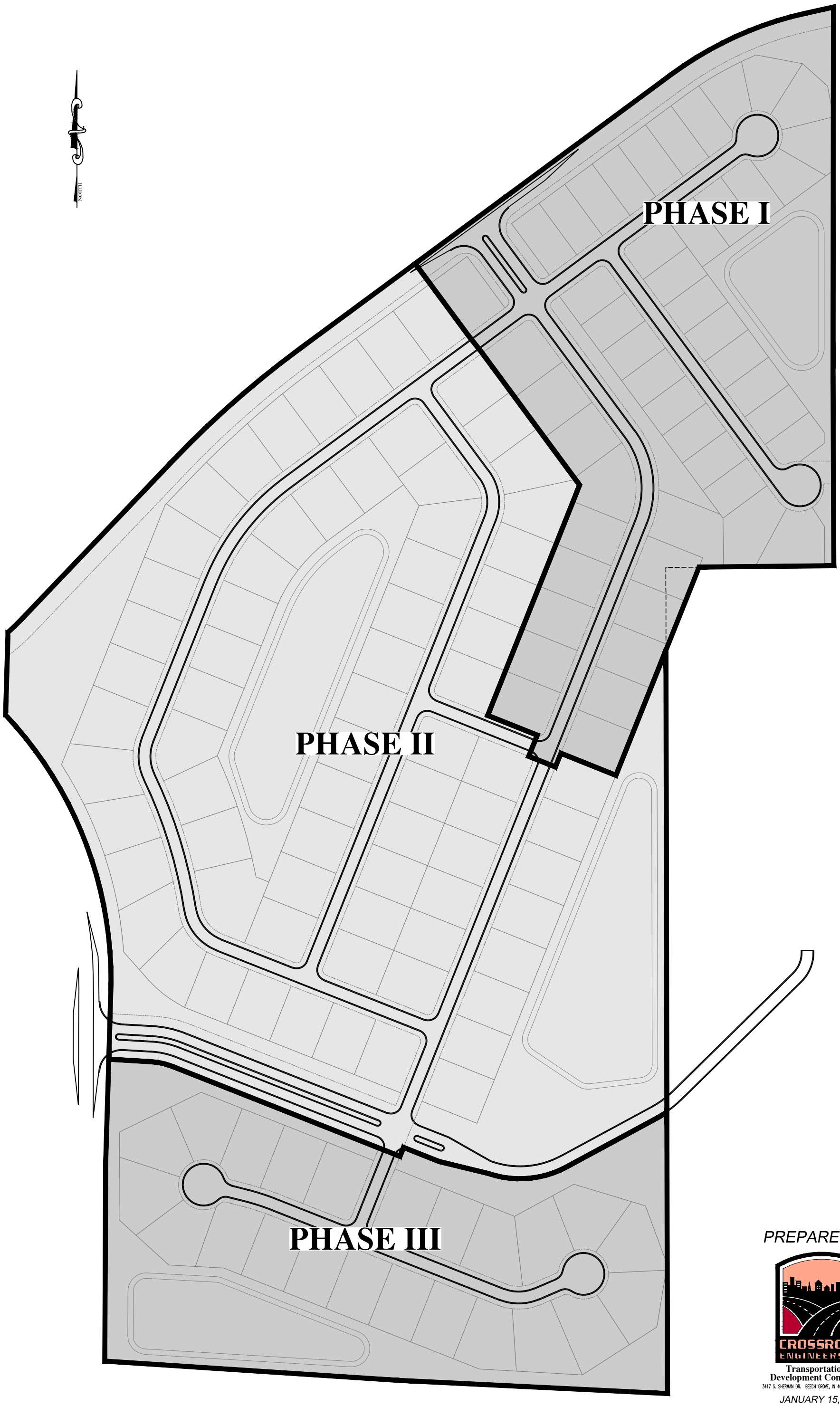

PREPARED BY:

CROSSROAD ENGINEERS, PC

Transportation & Development Consultants

3417 S. SHERMAN DR. BEECH GROVE, IN 46107 (317) 780-1555

JANUARY 15, 2014

- **EXHIBIT K**– Guidelines for Architectural Approval and Construction

HOMESTEADS AT HILLVIEW (Village Green, Homestead, and Preserve) GUIDELINES FOR ARCHITECTURAL APPROVAL AND CONSTRUCTION

INTRODUCTION

Pursuant to the Declaration of Covenants and Restrictions of Homesteads at Hillview as amended and supplemented (herein referred to as the "Declaration"), the Homesteads at Hillview Architectural Control Committee (herein referred to as the "Committee") is charged with the responsibility of preserving and enhancing the values of properties subject to the Declaration, maintaining a harmonious relationship among structures and the natural vegetation and topography of said properties, and providing for the proper functioning of the storm drainage system for said properties. For these purposes, the Committee has the right to promulgate and enforce rules, regulations and guidelines to regulate the exterior design, appearance, use, location and maintenance of lands, and improvements thereon, subject to the Declaration. In order to satisfy this responsibility, the Committee has the right to take the following actions:

(a) Approve or disapprove plans and specifications for all proposed construction on land subject to the Declaration, and

(b) Approve or disapprove plans and specifications for all improvements of property on land subject to the Declaration.

The following guidelines for all construction on and improvement of the land subject to the Declaration are hereby adopted by the Committee for guidance to property owners in preparing and submitting plans and specifications to the Committee for its consideration. These guidelines may be changed, modified and amended by the Committee at any time, in accordance with the procedure therefore set forth in the Declaration.

NOTE: NO NEW CONSTRUCTION OR IMPROVEMENT TO AN EXISTING STRUCTURE MAY BE INITIATED WITHOUT PRIOR WRITTEN APPROVAL FROM THE COMMITTEE.

While the Committee shall have up to fourteen (14) days for the approval or rejection of submitted plans, every effort will be made to complete the review process in a shorter period when necessary to accommodate the needs of property owners.

I. CONSTRUCTION APPROVAL

In order to create and maintain a high quality residential development on the subject property, certain criteria for all construction has been established by the Committee.

The owner or owners of a lot shall be responsible for the performance of all requirements of these guidelines by builders and contractors employed by or through such owners. In the case of

a builder constructing a speculative home the builder will be held responsible for meeting the requirements.

1. METHOD OF APPROVAL

The Committee shall review plans within fourteen (14) days of complete submittal. A "Checklist of Compliance", attached to these Guidelines, shall be returned with one (1) set of plans stamped "Approved", signed and dated by the Committee. The Committee shall retain one (1) set of plans with the Checklist for its files. If the Committee disapproves the plans, written notice of such shall be given to the lot owner and shall specify the reason or reasons for such disapproval. Construction may not start until all plans have received "approval" from the Committee.

2. RESUBMITTAL

If the Committee has disapproved any of the submitted plans, it is the responsibility of the owner to see that corrections or modifications are made in compliance with the Committee comments. One set of corrected plans shall then be resubmitted with changes "noted". The Committee will make every effort to review and approve the plans as quickly as possible.

3. GENERAL REQUIREMENTS FOR CONSTRUCTION

While detailed construction requirements may vary by specific areas or sections of the property, the general requirements are set forth below.

(a) Security Deposit. For any and every improvement proposed on each lot, the owner of or builder on said lot shall be required to deposit a $2500 security deposit with the Developer or Homesteads at Hillview Homeowner's Association ("HOA") for the faithful compliance with the Declaration and the architectural guidelines contained herein. The security deposit shall be held in escrow and promptly returned upon completion of the requirements by the owner or builder. In the event owner or builder fails to comply with the terms contained herein and the Declaration, the security deposit shall be applied to any cost that may be incurred by the Developer or HOA for corrective work; provided however the Developer or HOA shall not be obligated to perform any corrective work made necessary by owner or builder.

(b) Tree Preservation. No existing tree 15' outside of the building, and 10' outside the driveway and parking areas of a lot shall be removed without the prior written approval of the Committee and such approval shall only be granted upon proof of unusual hardship in the practical utilization of the lot. Accordingly, all plot plans submitted to the Committee for approval shall designate thereon all trees outside of the building, driveway and parking areas. The removal or destruction of any such trees without

the consent of the Committee shall result in liability of the owner of such lot to replace said trees with trees of the like kind, quality and size.

(c) Construction Trash. All builders will be required to utilize a thirty (30) cubic yard trash receptacle for each home during periods of construction in order to properly dispose of debris and to preserve the overall appearance of the community while under construction.

(d) Temporary Driveway. To further preserve the overall appearance of the community during home construction, each builder is required to install and maintain a temporary stone drive on each lot. Such temporary drive shall consist of #2 and/or #53 stone and shall provide for construction access from the public street to the building area. Street shall be kept clean of mud and debris in front of site and leading from site at all times.

(e) Damage Control. Each builder shall be responsible for damage to adjacent lots caused by its suppliers, agents, delivery men, subcontractors, etc. The undersigned has inspected the curbs and street sidewalks in front of said lot and found them defect-free and accepts them as is, and is responsible for any damage caused to them while said home is under construction and or any future construction activity.

(f) Colors and Materials of Homes. Materials used on the exterior of homes and improvements are subject to the approval of the Committee, and all exterior colors are, generally, to be subdued, earthen tones or white and compatible with other structures in or planned for the immediate area.

(g) Yards. By applicable zoning ordinance, the "front yard" of a lot is considered to be that area between the public street frontage and the house regardless of how the house is faced and minimum front yard and rear yard setbacks must minimally comply with the requirements therefore referred to in the Plat Restrictions. The side yard setbacks for primary structures for each community, as determined by the Committee, are as follows:

Hillview Community	Minimum	Aggregate
Homestead	5'	10'
Village Green	10'	20'
Preserve	10'	20'

The side and rear yard setback for all accessary structures shall be five (5) feet.

All setbacks are subject to approval by the Johnson County Planning and Zoning Department.

(h) Erosion Control and Tree Protection Measures. The owner or owners of a lot shall be responsible for the performance of all requirements of these guidelines by builders and contractors employed or engaged by or through such owner or owners. During periods of construction of a home or improvements on a lot, the builder shall provide adequate physical barriers such as straw bales or snow fencing in order to protect trees from damage by construction equipment and related activities. In addition, builders shall be required to exercise erosion control measures to prevent silt transportation to the main drainage ways. Builders shall provide appropriate temporary seeding of disturbed earth areas and temporary wood or straw bale dams to restrict silt-sediment transportation (lot owners/builders must abide by Erosion & Sediment Control Rule #5).

(i) Storm Water Drainage. To aid in the efficient operation of the storm water drainage system of the entire property subject to the Declaration, all water discharged from improvements on such lot including, but not limited to, water discharged from or through roofs, down spouts, sump pumps, gravity drains, water treatment and geothermal devices, patios, pool decks and tennis courts, shall be directed into existing storm drainage facilities. The site plan or plot plan for a lot submitted to the Committee for its approval shall reflect compliance with the foregoing provisions. The builder is responsible for maintaining proper lot drainage between homes as they are constructed per drainage plan.

(j) Utilities. All utilities shall be installed underground.

4. PLANS AND SPECIFICATIONS

In order to properly review proposed construction, the Committee has established the following drawings as a minimum for submittal to the Committee. Submittal for approval shall include all items below. Clarification drawings and details may be requested by the Committee prior to approval if adequate details are not included in the plans.

(a) Plot Plan. The plot plan shall include location of all existing trees, proposed structure, driveways, walks, terraces, decks, pools, fences, etc. The plan shall also include all existing and proposed elevations, contours, finished floor elevations, proposed and existing utilities.

(b) Foundation Plan.

(c) Floor Plans.

(d) Elevations. Front, rear, sides.

(e) Details. Exterior

(f) Specifications. For all exterior building colors, finishes and materials.

All site related plans shall be drawn at a scale of not less that 1”=30'. All architectural plans are to be drawn at a scale of not less than 1/4”=1'. All plans shall be full dimensioned and presented in duplicate (two sets).

II. ARCHITECTURAL GUIDELINES

As noted previously, any new building or improvement or any addition to an existing building or an exterior alteration or change to an existing building must have the prior written approval of the Committee before any work is undertaken. The Committee has established the following additional guidelines, coupled with the Declaration, for specific types of construction and improvements on land subject to the Declaration. Any addition, exterior alteration or change to an existing building shall be compatible with the design character of the original building. Any new detached structure (if permitted) shall be compatible with the existing structure.

1. FENCES, WALLS, AND SCREENING

Fencing, walls and screening will be designed and installed to be as harmonious as possible with the architectural character of the community. No fence or screen will be approved if its installation will obstruct necessary site lines for vehicular traffic. Undue obstruction of view or other amenities from adjoining properties will be taken into consideration by the Committee when reviewing for approval. Fences in general shall not be located any closer to the front of the home than the rear foundation line of the home, unless otherwise approved by the Committee. The Committee discourages fencing of the entire back yard due to the effect that this fencing may have on the feeling of spaciousness designed by other property owners. The Committee shall have the right to require additional landscaping on the exterior side of all solid fencing on a lot (i.e. on the sides of such fencing facing away from the house on such lot). Fences may be privately installed but must be constructed to professional levels of quality.

(a) Height Restriction. The Committee is of the opinion that the environmental integrity of the community will be materially lessened if the open nature of the community is damaged by a proliferation of fences of excessive height. The Committee, therefore, will approve fences up to four (4) feet in height which otherwise meet these guidelines. The Committee will give consideration, however, to a variance in this height limit where clearly unique circumstances exist.

(b) Materials and Finish.

(1) Wrought Iron fencing will be approved if, in the sole discretion of the Committee, the design is in conformity with the architectural design of the community, subject to the Committee’s right to

require landscaping on the exterior sides thereof and is located in an area where the environmental integrity of the community or neighboring lots is not lessened or compromised.

(2) Chain-link fencing is not permitted.

(3) Wood fencing is not permitted.

(4) Walls above grade should be constructed of natural stone, masonry or attractive timber. (Railroad ties will not be allowed.)

2. LANDSCAPE MATERIALS

Each home is required to have a minimum planting requirement of:

<u>Front and Side Yard</u>

2 Deciduous Shade Trees	2-2 ½" caliper
1 Flowering Tree	1-1 ½" caliper
3 Conifer Trees	6-8' height
6 Shrubs	3-4' height
10 Shrubs	18-24" spread

** Two (2) of the required deciduous tree plantings above shall be located in the front yard of each lot, at a maximum distance of fifteen (15) feet from the Right-of-Way.

3. LAWNS

All yards are to be seeded as the minimum requirement. All established lawns are required to be fertilized and weeded as necessary to insure a quality lawn appearance at all times.

4. RETAINING WALLS

Retaining walls must be architecturally compatible with the exterior of the home (i.e. stone; brick or milled timber). Railroad tie retaining walls will not be approved.

5. ROOFS

All roofing materials must be of either wood shingle or a "dimensional" shingle as approved by the Committee.

6. MAILBOXES

In order to preserve the overall aesthetic appearance of the subdivision properties subject to the Declaration, all mailboxes will be of like design, type and color as required by the Developer and/or HOA. Each mailbox will be purchased from Developer at the initial closing of each lot for $660 and said mailbox will be held in inventory until its installation. Each mailbox will be installed at the Developer's and/or HOA's direction upon the successful completion of the home located on each lot.

7. ACCESSORY STRUCTURES

No detached accessory structures shall be permitted on any lot including Garages, Storage Structures, and In-Law Quarters. Exceptions may include Pool House structures and landscape features such as a Trellis, which may be approved by the committee in its sole discretion.

8. MISCELLANEOUS

(a) All construction trades performing work on any structure or other improvement on any lot in the property subject to the Declaration will be expected to do their work in a professional manner, and in accordance with all standards published by the recognized trade councils of their respective industries, and it shall be understood that all work performed in such property shall be of high quality. It is not the duty or the responsibility of the Committee to supervise or inspect the quality of construction performed by the construction trades, but should the Committee discover what it considers "low quality work" or work being performed which is not in accordance with the plans approved by the Committee, the owner of the lot and the holder of the building permit for the work in question (if known) may be notified and the work shall be corrected to a professional standard and made to conform to the approved plans.

(b) Should the determination of the Committee in this regard be challenged by the owner of the lot or the holder of the building permit, such challenge shall be in writing and served upon the Committee accompanied by a certified letter from an architect registered to practice in the State of Indiana and bearing his signed seal stating that, in his professional opinion, the work in question is in accordance with the plans approved by the Committee and meets the quality standards herein required.

(c) Should the Committee still disagree and feel the work is substandard or not in accordance with the approved plans, a panel of three architects will be chosen to review the work and their majority vote shall constitute the final determination as to what, if any, action is required. Should such panel of architects rule the work substandard or not in accordance with the

approved plans, then the work shall be re-executed to professional standards and in accordance with the approved plans within thirty (30) days. In any case in which such a panel of architects is to make a determination hereunder, one such architect shall be selected by the Committee, one by the owner of the lot (or his builder), and the third by the two so selected. If either party fails to select its architect and advise the other of such selection within five (5) days after the date upon which the Committee notifies the owner of the lot or the holder of the building permit that the Committee still feels the work is substandard or not in accordance with the approved plans, then the single architect selected by one of the parties shall serve alone as the panel of architects to make such final determination. The costs and expenses of the architectural review panel selected to determine any such dispute shall be borne and paid in equal shares, one-half (1/2) by the Association and one-half (1/2) by the owner of the affected lot.

(d) Neither the developer of the property subject to the Declaration nor the HOA nor any member of the Committee shall at any time have any liability whatsoever to the owner of any lot in such property or to any holder of a building permit for any improvements to be located thereon nor to any other person for any determination or decision made by the Committee in the exercise of its duties and responsibilities or for any actions taken or attempts made by the Developer or the HOA or the Committee to enforce quality construction practices in the subject property.

9. MISCELLANEOUS IN FURTHER DETAIL

9.1 Diligence in Construction. Every building whose construction on any Lot is begun shall be commenced within three hundred sixty (360) days after the beginning of such construction unless circumstances beyond the reasonable control of the builder and/or Owner prevent such completion. No improvement which has partially or totally been destroyed by fire or otherwise shall be allowed to remain in such state for more than three (3) months from the time of such destruction or damage. The Declarant and/or Homeowners Association shall have standing and authority to seek an injunction or order for the removal of any materials and partially completed structures in violation of this covenant.

9.2 Energy Conservation Equipment. No solar energy collector panels or attendant hardware or other energy conservation equipment shall be constructed or installed on any Lot unless it is an integral and harmonious part of the architectural design of a structure, as determined in the sole discretion of the Committee pursuant to Article IX of this Declaration.

9.3 Landscaping. No Owner shall be allowed to plant trees, landscape or do any gardening in the Common Area, except with express permission from the Board. Each Lot Owner shall provide reasonable landscaping on his Lot including, at a

minimum, suitable foundation landscaping. All landscaping plans are subject to Committee approval in accordance with the guidelines and procedures promulgated by the Committee. The Committee may, in its discretion, modify such plans to promote the integrity and the aesthetic appearances of this subdivision. Finished grading of all yards must be completed within 15 days after the dwelling is constructed, weather permitting, and all yards must be seeded or sodded with grass within ten days after the completion of finish grading, weather permitting. Trees provided by Declarant, if any, will be protected by Owner during construction and replaced within 30 days if damaged or if a tree dies on Owner Lot.

9.4 Minimum Building Size. In Homesteads at Hillview Subdivision, the following minimum building square footages shall apply, unless approved by the Committee, after giving due consideration to zoning commitments of record:

Village Green:
Ranch – 1,700 sq. ft.
Multi-story - aggregate of all living area 2,000 sq. ft., with Minimum of 1,200 sq. ft. ground floor living

Homestead:
Ranch – 1,800 sq. ft.
Multi-story – aggregate of all living area 2,200 sq. ft., with minimum of 1,400 sq. ft ground floor living

Preserve:
Ranch – 1,800 sq. ft.
Multi-story – aggregate of all living 2,200 sq. ft., with minimum of 1,400 sq. ft ground floor living

9.5 Model Homes. No Owner of any Lot shall build or permit the building upon his Lot or any dwelling house that is to be used as a model home or exhibit house without permission to do so from the Declarant or, after the Applicable Date, the Architectural Control Committee.

9.6 Other Exterior Attachments. No Owner shall cause or permit anything to be hung or displayed on the outside of the windows of his or her Dwelling Unit or placed on the outside walls of any building, and no awning, canopy, shutter or other attachment or thing shall be affixed to or placed upon the exterior walls or roofs or any other parts of any building without the prior consent of the Committee unless otherwise expressly authorized herein, or by the rules, regulations and guidelines of the Committee.

9.7 Garages and Driveways. No dwelling shall have less than a full size 2-car or more than a 3-car attached garage, unless otherwise approved by the Committee. All driveways and vehicle parking areas shall be hard surfaced with either concrete or an acceptable alternate approved by the Committee and shall be so surfaced from their point of connection with the abutting street to their point of connection with the garage apron. No gravel or stone driveways will be permitted.

9.8 Playground. Any Playground or other play areas or equipment furnished by the Association or erected within the Properties shall be used at the risk of the user, and the Association shall not be held liable to any Person for any claim, damage, or injury occurring thereon or related to use thereof. No playground equipment, (including, but not limited to, trampolines), tree houses, or similar structures shall be erected on any Lot without prior approval pursuant to Article IX hereof: provided, however, children's play equipment such as sandboxes, swings and slides, shall not require approval by the Committee provided such equipment is not more than six (6) feet high, maintained by the lot owner in good repair (including painting) and every reasonable effort has been made by the lot owner to screen or shield such equipment from view of adjacent lot owners. Equipment higher than eight (8) feet shall require approval of the design, location, color, material and use by the Committee.

9.9 Private Water Systems. Private water systems will not be allowed.

9.10 Prohibition of Used Structures. All structures constructed or placed on any Lot shall be constructed with substantially all new materials, and no used structures shall be relocated or placed on any such Lot.

9.11 Sanitary Waste Disposal.

A. Nuisances. No outside toilets shall be permitted on any Lot (except during a period of construction and then only with the consent of the Committee), and no sanitary waste or other wastes shall be permitted to be exposed.

B. Construction of Sanitary Sewage Lines. All sanitary sewage lines on the Lots shall be designed, constructed and installed in accordance with the provisions and requirements of City of Franklin, City of Franklin Utilities, and these Restrictions.

C. Connection Requirements for Sanitary Sewers. All homes shall have sewers directly connected by way of gravity except by the use of lift pumps and/or check valves or connections shall be one foot above the lowest manhole in the Subdivision.

9.12 Swimming Pools. Swimming Pools must have the approval of the Committee before any work is undertaken. No above ground swimming pools shall be allowed, provided nothing herein shall preclude installation and use of hot tubs, spas, jacuzzis or similar apparatus with prior approval of the Committee. Permanent backyard pools will be approved by the Committee only after careful consideration of the potential effect of such a pool in neighboring properties. An application for the construction of a swimming pool will not be considered unless the application is accompanied by an application for acceptable fence or other safety protection and landscape design approval. The design of such fence shall conform to county or municipal regulations for such fencing. Use of plantings in the vicinity of the proposed pool may be required to soften the effect of sound and required pool fencing, on adjacent properties.

9.13 Tennis Courts, Racquetball Courts, Paddle Ball Courts, Basketball Goals, Etc. Tennis courts, racquetball courts, paddle ball courts, squash courts, and other recreational or sporting facilities will be approved by the Committee only after thorough consideration of the potential effect of such a structure or use in neighboring properties. The Committee will not approve non-baffled lighted courts or facilities. An application for the construction of any such facility will not be considered unless the application is accompanied by an application for an acceptable fence and landscape design approval. It is recommended by the Committee that any such fencing be of an open composition in order to blend in with the surrounding properties and soften the effect on adjacent properties.

All basketball backboards or any other fixed games and play structures shall be located behind the rear foundation line of the main structure and within Lot set-back lines unless otherwise approved by the Committee. The Committee must approve the location and type of basketball goals. All basketball backboards must be made of a transparent material.

9.14 Utility Lines. No overhead utility lines, including lines for cable television, shall be permitted within the Properties, except for temporary lines as required during construction and high voltage lines if required by law or for safety purposes.

The manufacturer's printed instruction and directions for the application or installation of their products shall always constitute the minimum standard for the application or installation of that product.

If this instrument is being executed by Builder, Builder agrees to obtain written acceptance and approval of this instrument from its purchaser prior to the re-sale of the Lot or completion of improvements on the Lot by Builder.

By my signature below I certify that I have read the entire contents of this document and agree to comply with the requirements contained herein. Lot # _____

_____	_____
Builder	Lot Owner
_____	_____
Date	Date

608114_1

- **EXHIBIT L**– Preliminary PUD Ordinance

EXHIBIT "L"

COUNCIL ORDINANCE 2014- __
HOMESTEADS AT HILLVEIW (VILLAGE GREEN, HOMESTEAD, AND PRESERVE) RESIDENTIAL PUD PHASE / REZONING COMMITMENTS TO BE RECORDED AND ATTACHED TO THE HOMESTEADS AT HILLVIEW PUD ZONING STANDARDS.

Commitments as stated and provided to the Commission on February ___, 2014.

OVERVIEW:

The single-family residential development, which will be known as ***Homesteads at Hillview,*** with a companion golf course, lies at the southeast corner of Eastview Drive and Upper Shelbyville Road in the City of Franklin, Indiana. The development will be comprised of three sections, which differ in lot sizes and densities: Village Green, Homesteads and Preserve.

1. **Village Green**, constituting 15% of the development, is the most dense section with 33 residential lots. These will be the smallest lot sizes within the development.

2. **The Homesteads**, constituting 65% of the development, will feature 89 larger residential lots. Those lots will be approximately 1½ times the size of the lots within Village Green.

3. **The Preserve**, constituting 20% of the development, will consist of the 23 largest residential lots in the development. Those lots will be approximately 10% larger than the lots within the Homesteads.

EXISTING EASEMENTS:

There are three easements located on the site. Those are not expected to change.

1. Sewer Easement: There is a 25 feet wide sewer easement located across the frontage of the site on the south side of Upper Shelbyville Road. The purpose of this easement is to contain and protect the existing sanitary sewer main, and is granted to the City of Franklin.

2. Water Line Easement: There is a 20 feet wide water line easement located across the frontage of the site on the east side of Eastview Drive. The purpose of this easement is to contain and protect the existing water main, and is granted to Indiana American Water Company.

3. Electric Boxes Utility: There is a utility easement located on the east side of Eastview Drive. The purpose of this easement is to contain and protect the existing electric boxes. Electric boxes utility easement.

LAND USE

The land use of the development will be single-family residential, with a companion golf course use. The Village Green section will be of the highest density and feature smaller lots for no/low maintenance residences. The minimum lot area within the Village Green section will be 8,420 sq.ft (0.193 Ac), with a maximum impervious lot coverage percentage of 67%. The Homesteads and Preserve sections will be of lesser density and feature larger estate-sized lots. The minimum lot area within the Homesteads section will be 13,000 sq.ft. (0.298 Ac), with a maximum lot coverage percentage of 60%. The minimum lot area within the Preserve section will be 14,500 sq.ft. (0.333 Ac), with a maximum lot coverage percentage of 60%.

WATER:

There is an existing water main across the entire western frontage of the property along the east side of Eastview Drive and a main across the northern frontage along the north side of Upper Shelbyville Road. The utility provider within the project vicinity is Indiana American Water Company.

SANITARY SEWER

There is an existing 15-inch diameter sanitary main across the northern frontage of the property along the south side of Upper Shelbyville Road. It is expected that the depth of the existing sanitary sewer is sufficient to service the proposed development with gravity sewer. Water utility within the project vicinity is the City of Franklin.

ELECTRICITY

There are existing overhead electric facilities across both the northern and western frontages of the site, along the east side of Eastview Drive and the north side of Upper Shelbyville Road.

GAS

There is an existing 4-inch plastic gas main across the northern frontage of the property on the north side of the Upper Shelbyville Road. Therefore, there are sufficient gas facilities readily available to serve the development. It has been indicated by the gas utility provider within the project vicinity, Vectren Energy, that an extension of the 4-inch main from the intersection extending south along Eastview Drive is likely to be required for the development.

AVAILABILITY OF COMMUNITY FACILITIES

Homesteads at Hillview is located in close proximity to Interstate 65, providing reasonably convenient access to cultural activities, shopping and other services located within the Indianapolis Metropolitan Area. Franklin College is located close to the development, as is Johnson Memorial Hospital.

ORDER OF DEVELOPMENT

The exact order of development of ***Homesteads at Hillview*** cannot be predicted at this time. Market conditions at the time of construction commencement will dictate the order of development. However, it is anticipated that Phase #1 of the development will include the entire Village Green section (Lots 1-33); a portion of the Homesteads section (Lots 34, 65-70 and 114-122; the connection of Meadowbrook Lane to Upper Shelbyville, Road, Detention Pond #1; and all associated street and utility infrastructure. Next, it is anticipated that Phase #2 of the development will include the remainder of the lots within the Homesteads section; the connection of Homestead Boulevard to Eastview Drive; Detention Ponds #2 and #3; and all associated street and utility infrastructure. Lastly, it is anticipated that Phase #3 will include the entire Preserve section; Detention Pond #4; and all associated street and utility infrastructure.

DEVELOPMENT STANRDARDS

1. All Single Family Dwellings
    a. Primary roof pitch for new homes – 8/12 minimum
    b. Exterior materials limited to brick, stone, cedar, EIFs, hardy plank and dimensional fiberglass shingles consistent in earthen tone coloration and otherwise with the projects interior thee of a custom themed community.
    c. No less than two car garage
    All garages with vehicle entrances (garage doors) that face a public street on which the lot has frontage shall not be required to have a minimum or maximum distance offset behind the setback provided by the living area of the residence.

Garages will be permitted to be offset either in front of, or behind, the living area of the residence.

2. VILLAGE GREEN
    a. 33 Single family dwellings
    b. Minimum living areas:
        a. Ranch houses will be a minimum of 1,700 sq. ft.
        b. Multi-story houses will be a minimum of 2,000 sq. ft in the aggregate and no less than 1,200 sq. ft. on the ground floor
    c. Proposed Lot Standards
        a. Minimum lot area – 8,420 sq. ft.
        b. Minimum lot width – 57 ft.
        c. Minimum front yard setback – 20 ft. when adjacent to a local street
        d. Min. Side Yard Setback = 5’ (primary structure) / 5’ (accessory structure)
        e. Min. Rear Yard Setback = 15’ (primary structure) / 5’ (accessory structure)
        f. Maximum primary structures per lot – 1
        g. Maximum height of primary structures – 48 ft.

3. HOMESTEAD
    a. 89 Single family dwellings
    b. Minimum living areas:
        a. Ranch houses will be a minimum of 1,800 sq. ft.
        b. Multi-story houses will be a minimum of 2,200 sq. ft. in the aggregate and no less than 1,400 sq. ft. on the ground floor
    c. Proposed Lot Standards
        a. Minimum lot area – 13,000 sq. ft.
        b. Minimum lot width – 63 ft.
        c. Minimum front yard setback – 20 ft. when adjacent to a local street
        d. Min. Side Yard Setback = 10’ (primary structure) / 5’ (accessory structure)
        e. Min. Rear Yard Setback = 25’ (primary structure) / 5’ (accessory structure)
        f. Maximum primary structures per lot – 1
        g. Maximum height of primary structures – 48 ft.

4. PRESERVE
    a. 23 Single family dwellings
    b. Minimum living areas:
        a. Ranch houses will be a minimum of 1,800 sq. ft.

b. Multi-story houses will be a minimum of 2,200 sq. ft. in the aggregate and no less than 1,400 sq. ft. on the ground floor

c. Proposed Lot Standards
    a. Minimum lot area – 14,500 sq. ft.
    b. Minimum lot width – 63 ft.
    c. Minimum front yard setback – 20 ft. when adjacent to a local street
    d. Min. Side Yard Setback = 10' (primary structure) / 5' (accessory structure)
    e. Min. Rear Yard Setback = 25' (primary structure) / 5' (accessory structure)
    f. Maximum primary structures per lot – 1
    g. Maximum height of primary structures – 48 ft.

STREET SYSTEMS

See Exhibit C ("Detailed PUD Plan"). The proposed internal subdivision street system will include all local classification streets with two (2) entrances. One entrance will be a boulevard entrance connecting to Eastview drive. The other entrance will be a boulevard entrance from Upper Shelbyville Road. All proposed local streets are to consist of bituminous pavement with a minimum width of twenty four (24) feet, and two (2) feet wide concrete roll curbs on each side. All proposed local streets will be contained within a minimum fifty (50) feet wide right-of-way. It is expected that some waivers from the City of Franklin Subdivision Control Ordinance will be requested during the preliminary platting process of the development.

OPEN SPACE

The Homesteads at Hillview development will include 22.591 Ac. of open space / common areas, spread throughout the development, as shown on the enclosed Open Space Exhibit.

LANDSCAPING:
Landscaping for the development will consist of bufferyard landscaping, boulevard street landscaping, and landscaping at the entrances to the subdivision. See Exhibit E. The following landscaped areas will be provided:

1. 15 ft. bufferyard with Type 1 plantings (one (1) broad-leaf deciduous canopy tree per thirty (30) feet of boundary) will be provided in a common area behind the double frontage lots on the south side of Upper Shelbyville Road.

2. 15 ft. bufferyard with Type 2 plantings (one (1) broad-leaf deciduous canopy tree per twenty five (25) feet of boundary) will be provided in a common area behind the double frontage lots on the east side of Eastview Drive.

3. 15 ft. bufferyard with Type 2 plantings (two (2) evergreen conifers per twenty-five (25) feet of boundary) will be provided in a common area along the south property line of the development.

4. 30 ft. bufferyard with a four (4) feet tall undulating earthen mound and a row of evergreen conifers at one (1) evergreen tree per ten (10) feet of boundary will be provided in common areas behind the double frontage lots on both sides of Homestead Boulevard.

5. 20 ft. bufferyard with a three (3) feet tall undulating earthen mound and a row of evergreen conifers at one (1) evergreen tree per ten (10) feet of boundary will be provided in the common area behind the double frontage lots with the Village Green section of the development (Lots 26-33).

6. The medians of both boulevard entrances into the development will be landscaped with one (1) non-fruit bearing, ornamental canopy tree per fifty (50) feet of median.

7. Both entrances will also include additional landscaping around the proposed development signage.

8. Landscaping will also be provided by existing trees, as healthy, mature trees within common areas on both sides of the northern boulevard entrance from Upper Shelbyville Road, and within the common area at the southeast corner of the Eastview Drive and Upper Shelbyville Road intersection that can be preserved by the project, will be preserved.

9. Street tree landscaping requirements for all internal streets within the development will be satisfied by the following individual lot landscaping requirements that will be completed as the development is built out. No street tree plantings will be requires along Eastview Drive and Upper Shelbyville Road. Each lot is required to have a minimum planting requirement of the following:

   a. <u>Front and Side Yard</u>

2 Deciduous Shade Trees	2-2 ½” caliper
1 Flowering Tree	1-1 ½” caliper
3 Conifer Trees	6-8’ height
6 Shrubs	3-4’ height
10 Shrubs	18-24” spread

** Two (2) of the required deciduous tree plantings above shall be located in the front yard of each lot, at a maximum distance of fifteen (15) feet from the Right-of-Way.

Each Owner shall provide reasonable landscaping on his Lot including, at a minimum, suitable foundation landscaping. All landscaping plans are subject to review of Homesteads at Hillview Architectural Control Committee in accordance with the guidelines and procedures promulgated by the Committee. The Committee may, in its discretion, modify such plans to promote the integrity and the aesthetic appearances of the subdivision. Finished grading of all yards must be completed within fifteen (15) days after the dwelling is constructed, weather permitting, and all yards must be seeded or sodded with grass within ten (10) days after the completion of finish grading, weather permitting. Trees provided by Declarant, if any, will be protected by Owner during construction and replaced within thirty (30) days if damaged or if a tree dies on the Owner's lot.

LIGHTING

Street lighting for the development shall be in accordance with Section 7.18 of the City of Franklin Zoning Ordinance, the Homesteads at Hillview Rules and Regulations, and the Guidelines for Architectural Approval and Construction. Refer to Exhibit C – Detailed PUD Plan – Homesteads at Hillview for a typical layout of street lighting throughout the development. Actual locations of street lighting may be revised as detailed construction plans for the development are completed. Refer to Exhibit F – Street Lighting Examples for typical street lights for the development.

SIGNAGE STANDARDS

Signage for the development shall be in accordance with the PUD Ordinance 2014-___, Homesteads at Hillview Rules and Regulations, the Guidelines for Architectural Approval and Construction, and if not covered within these documents, Article 8 of the City of Franklin Zoning Ordinance . Signage for the development shall consist of entry signage for the development on both sides of Homestead Boulevard at the intersection of Eastview Drive and on both sides of Meadowbrook Lane at the intersection of Upper Shelbyville Road. The signs may be a maximum of eight (8) feet tall in height, and a maximum of forty-eight (48) square feet per entry sign. Also, there will be neighborhood marker posts for signage of the three (3) sections of the development, and street signage throughout the development. Refer to Exhibit C – Detailed PUD Plan – Homesteads at Hillview for a typical layout of signage throughout the development. Actual signage locations and quantities may be revised as detailed construction plans for the developed are completed. Refer to Exhibit G – Signage Examples for typical entry signs, neighborhood marker posts, and street signage for the development.

Otherwise, no sign of any kind shall be erected within the Properties without the written consent of the Board of Directors, except entry and directional signs installed by Declarant and such signs, as may be required by legal proceedings. If permission is granted to any Person to erect a sign within the Properties, the Board reserves the right to restrict the size, color, lettering and placement of such sign. The Board of Directors or Declarant shall have the right to erect signs as they, in their discretion, deem appropriate. Signs advertising property for rent are specifically prohibited. Violation of this sign restriction will result in Fifty Dollars ($50.00) per day liquidated damages, payable to the Declarant until such time as the Association owns and is responsible for the maintenance of the Common Areas, at which time such liquidated damages shall be payable to the Association. The Declarant and/or Association shall approve all signs deemed appropriate by the Committee advertising properties for sale, which signs shall be uniform in design and placed as the Committee shall determine proper.

FENCING

No hedges, walls, dog runs, animal pens or fences of any kind shall be permitted on any Lot except as approved in accordance with Article IX of the Declaration. The preferred style of approved fence will be of a wrought-iron style. Chain-link fences will not be permitted.

ACCESSORY STRUCTURES

No Detached accessory structures shall be permitted on any lot including Garages, Storage Structures, and In-Law Quarters. Exceptions may include Pool House structures and landscaping features such as a Trellis, which may be approved by the Committee in its sole discretion.

ENERGY CONSERVATION EQUIPMENT

No solar energy collector panels or attendant hardware or other energy conservation equipment shall be constructed or installed on any Lot unless it is an integral and harmonious part of the architectural design of a structure, as determined in the sole discretion of the Committee pursuant to Article IX of the Declaration.

HOME OCCUPATION

No garage sale, moving sale, rummage sale or similar activity and no trade or business may be conducted in or from any Lot, except that an Owner or occupant of a Lot may conduct business activities within the Unit so long as: (a) the existence or operation of the business activity is not

apparent or detectable by sight, sound or smell from outside the Unit; (b) the business activity conforms to all zoning requirements for the Properties; (c) the business activity does not involve persons coming onto the Properties who do not reside in the Properties or door-to-door solicitation of residents of the Properties; and (d) the business activity is consistent with the residential character of the Properties and does not constitute a nuisance, or a hazardous or offensive use, or threaten the security or safety of other residents of the Properties, as may be determined in the sole discretion of the Board.

NATURAL FEATURES

A small portion of the site at the southeast corner of the Eastview Drive and Upper Shelbyville Road intersection lies within Zone 'AE', special flood hazard areas subject to inundation by the 1% annual chance flood, with base flood elevations determined. This area of the site will be maintained and the contours will be unaltered. Any asphalt path installation in this area will be constructed to not negatively impact the 100-year flood elevation. Also, the receiving culverts for the existing drainage swales will be maintained and preserved. Any off-site drainage areas will be managed by the development's proposed drainage facilities. Lastly, common areas will be provided to protect all possible existing trees.

HISTORIC FEATURES:

The existing project site does not contain any historic features, and is not included on the Indiana Historic Sites and Structures Inventory – Johnson County Interim Report; therefore, no accommodations are required for the proposed development.

MANDATORY PROPERY OWNERS ASSOCIATION:

Declarant and each Owner of a Lot shall automatically, upon becoming an Owner, be and become a member of the Association and shall remain a member under such time as his ownership of a Lot ceases. The Association will be formed for the purpose of providing for the maintenance, repair, replacement, administration, operation and ownership of the Common Areas as and to the extent provided herein, to pay taxes assessed against and payable with respect to these Common Areas, to pay any other necessary expenses and costs in connection with these Common Areas, and to perform such other functions as may be designated for it to perform under this Declaration.

WRITTEN COMMITMENTS:

Draft copies of the proposed written commitments for the Homesteads at Hillview development are included within Exhibit H – Homesteads at Hillview Written Commitments.

COVENANTS:

Draft copies of the proposed written commitments for the Homesteads at Hillview development are included within Exhibit I – Homesteads at Hillview Covenants.

Adopted the ___ of _____, 2014.